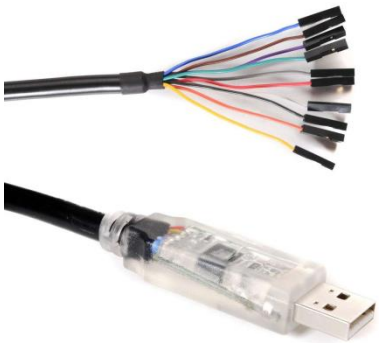

Future Technology Devices International Ltd

C232HM

USB 2.0 Hi-Speed to MPSSE Cable

Datasheet

Neither the whole nor any part of the information contained in, or the product described in this manual, may be adapted or reproduced in any material or electronic form without the prior written consent of the copyright holder. This product and its documentation are supplied on an as-is basis and no warranty as to their suitability for any particular purpose is either made or implied. Future Technology Devices International Ltd will not accept any claim for damages howsoever arising as a result of use or failure of this product. Your statutory rights are not affected. This product or any variant of it is not intended for use in any medical appliance, device or system in which the failure of the product might reasonably be expected to result in personal injury. This document provides preliminary information that may be subject to change without notice. No freedom to use patents or other intellectual property rights is implied by the publication of this document. Future Technology Devices International Ltd, Unit 1, 2 Seaward Place, Centurion Business Park, Glasgow G41 1HH United Kingdom. Scotland Registered Company Number: SC136640

1 Description

The **USB 2.0 Hi-Speed to MPSSE cable** contains a small internal electronic circuit board, utilising the FTDI FT232H, which is encapsulated into the USB connector end of the cable, this handles all the USB signalling and protocols. The cable provides a fast, simple way to connect devices with 3.3 Volt digital interfaces to USB. For full details of the IC, consult the FT232H datasheet, this is available from DS_FT232H.

The integrated FT232H device incorporates a command processor called the Multi-Protocol Synchronous Serial Engine (MPSSE). The purpose of the MPSSE command processor is to communicate with devices which use synchronous protocols (such as JTAG, SPI or I^2C) in an efficient manner. Full details are available in the MPSSE application note - AN_108.

The cable is terminated by ten individual wires with single pole connectors which can be interfaced to a male header. Cable signals are compliant with CMOS logic at 3.3 volts.

The FT232H is a single channel USB 2.0 Hi-Speed (480Mb/s) to UART/FIFO IC. It can be configured in a variety of industry standard serial or parallel interfaces, such as MPSSE - JTAG, SPI, I^2C.

The C232HM MPSSE cable is easily configured into each interface e.g. JTAG, SPI, I^2C via the application software.

The cable is powered from a USB host port and is USB 2.0 Hi-Speed compatible. The cable is 0.5m long and supports a data transfer up to 30Mbps in MPSSE mode.

The C232HM MPSSE cable requires USB device drivers, available free from http://www.ftdichip.com. The D2XX driver is used with application software to directly access the FT232H in the cable though a DLL. This is illustrated in the Figure 1-1

The C232HM MPSSE cable uses the FTDI's FT232H USB to serial IC device.

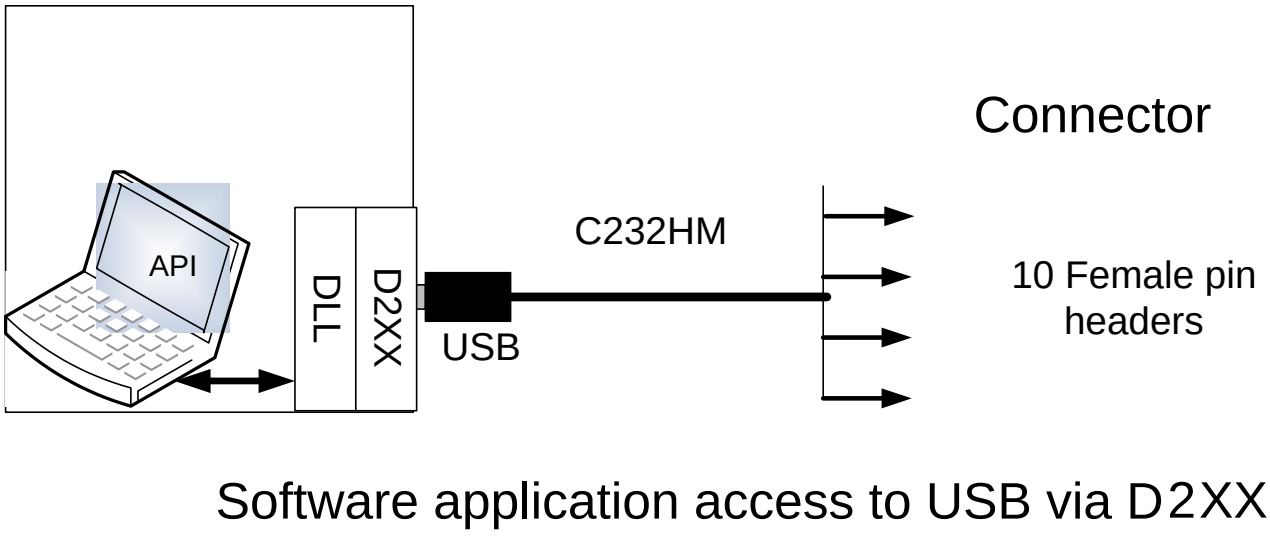

Figure 1-1 Using the C232HM MPSSE Cable

Copyright © Future Technology Devices International Limited

1.1 Available Cables and Part Numbers

The following Table 1.1 gives details of the available C232HM MPSSE cables.

Part Number	Description	End Connector	Cable details
C232HM-DDHSL-0	USB to MPSSE cable with +3.3V digital level signals. Maximum output of 250mA @ 3.3VDC on VCC (see ***Note 1***)	Single pole, receptacle x 10	10 core, UL2464 24 AWG, diam=6.5mm
C232HM-EDHSL-0	USB to MPSSE cable with +3.3V digital level signals. Maximum output of 450mA @ 5.0VDC on VCC (see ***Note 2***)	Single pole, receptacle x 10	10 core, UL2464 24 AWG, diam=6.5mm

Table 1.1 C232HM MPSSE Cable Descriptions and Part Numbers

Note 1: The VCC power output signal (RED wire) is 3.3V. The source of 3.3V is the on-board regulator output, which is switched onto the power output signal.

Note 2: The VCC power output signal (RED wire) is 5.0V. The source of 5.0V is the USB VBUS input, which is switched onto the power output signal.

FTDI supports customised end connector designs. For more information, please contact your local FTDI sales office (see end of datasheet for contact details).

1.2 Certifications

The FTDI C232HM MPSSE cables are fully RoHS compliant as well as CE and FCC certified.

1.3 USB Compliant

The FTDI C232HM MPSSE cables are fully compliant with the USB 2.0 specification and have been given the USB-IF Test-ID (TID) 10820025.



Copyright © Future Technology Devices International Limited

Table of Contents

1 Description 2
1.1 Available Cables and Part Numbers 3
1.2 Certifications 3
1.3 USB Compliant 3
2 Typical Applications 5
2.1 Driver Support 5
2.2 Features 6
3 C232HM MPSSE Cable connection and Mechanical Details 7
3.1 C232HM MPSSE Cable Signal Descriptions 8
3.2 C232HM MPSSE Cable Signal Descriptions 9
3.3 C232HM MPSSE Cable Electrical Parameters 10
3.3.1 C232HM-DDHSL-0 Electrical Parameters 10
3.3.2 C232HM-EDHSL-0 Electrical Parameters 10
3.3.3 C232HM-DDHSL-0 and C232HM-EDHSL-0 I/O Characteristics 10
4 Cable PCB Circuit Schematic 12
5 Contact Information 14
Appendix A - Cable EEPROM Configuration 15
Appendix B - References 16
Document References 16
Acronyms & Abbreviations 16
Appendix C - List of Figures and Tables 17
List of Figures 17
List of Tables 17
Appendix D – Revision History 18

Copyright © Future Technology Devices International Limited

2 Typical Applications

- USB to JTAG interfaces
- USB to SPI interfaces
- USB to I^2C interfaces
- Interfacing MCU / PLD / FPGA based designs to USB
- USB Audio and Low Bandwidth Video data transfer
- Rapid USB integration into existing electronic systems
- Prototyping platform for USB interface on new systems
- USB Instrumentation

2.1 Driver Support

Royalty free VIRTUAL COM PORT (VCP) DRIVERS for…

- Microsoft Windows 10 32,64-bit
- Microsoft Windows 8/8.1 32,64-bit
- Microsoft Windows 7 32,64-bit
- Microsoft Windows 2000, Server 2003, XP and Server 2008
- Microsoft Windows XP and XP 64-bit
- Microsoft Windows Vista and Vista 64-bit
- Microsoft Windows CE 4.2, 5.0 and 6.0
- Apple Mac OS-X
- Linux 2.6.39 or later

Royalty free D2XX *Direct* Drivers (USB Drivers + DLL S/W Interface)

- Microsoft Windows 10 32,64-bit
- Microsoft Windows 8/8.1 32,64-bit
- Microsoft Windows 7 32,64-bit
- Microsoft Windows 2000, Server 2003, XP and Server 2008
- Microsoft Windows XP and XP 64-bit
- Microsoft Windows Vista and Vista 64-bit
- Microsoft Windows CE 4.2, 5.0 and 6.0

Linux 2.6.32 or later

The drivers listed above are all available to download for free from http://www.ftdichip.com. Various Third-Party Drivers are also available for various other operating systems - see http://www.ftdichip.com/Support/Links.htm for details.

Copyright © Future Technology Devices International Limited

2.2 Features

- Based on the Single chip USB Hi-Speed FT232H device
- USB 2.0 Hi-Speed (480Mbits/Second) and Full Speed (12Mbits/Second) compatible
- Entire USB protocol handled on the chip – No USB-specific firmware programming required
- USB Type A connector for direct connection to a host or hub
- USB bus powered
- Fully assisted hardware or X-On / X-Off software handshaking
- Synchronous Serial (MPSSE) data rates of up to 30Mbps on JTAG, SPI and I2C
- 1kByte receive and transmit buffers for high data throughput
- Transmit and receive LED drive signals
- Adjustable receive buffer timeout
- Support for USB suspend and resume
- Low operating and USB suspend current
- Low USB bandwidth consumption
- UHCI / OHCI / EHCI host controller compatible
- -40°C to +85°C operating temperature range
- Cable length is 0.5m (19.7 inch)
- Custom versions also available (subject to Minimum Order Quantity (MOQ))
- FTDI's royalty-free D2XX drivers eliminate the requirement for USB driver development in most cases

Copyright © Future Technology Devices International Limited

3 C232HM MPSSE Cable connection and Mechanical Details

The following Figure 3-1 shows the cable signals and the wire colours for these signals on the C232HM MPSSE cable.

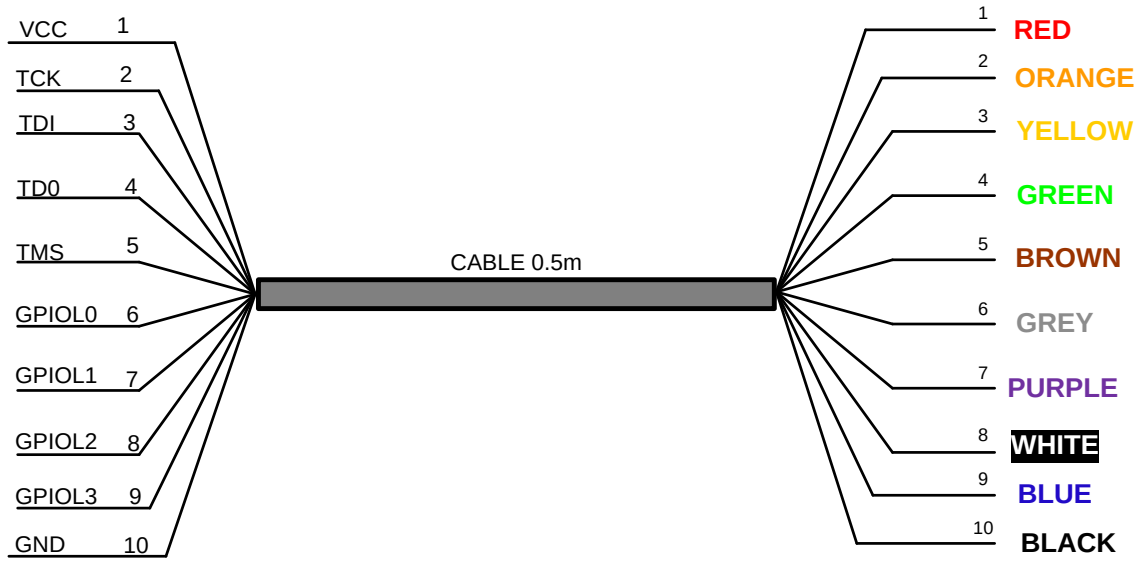

Figure 3-1 C232HM MPSSE Cable Connections (numbers refer to pad numbers on the PCB)

Copyright © Future Technology Devices International Limited

3.1 C232HM MPSSE Cable Signal Descriptions

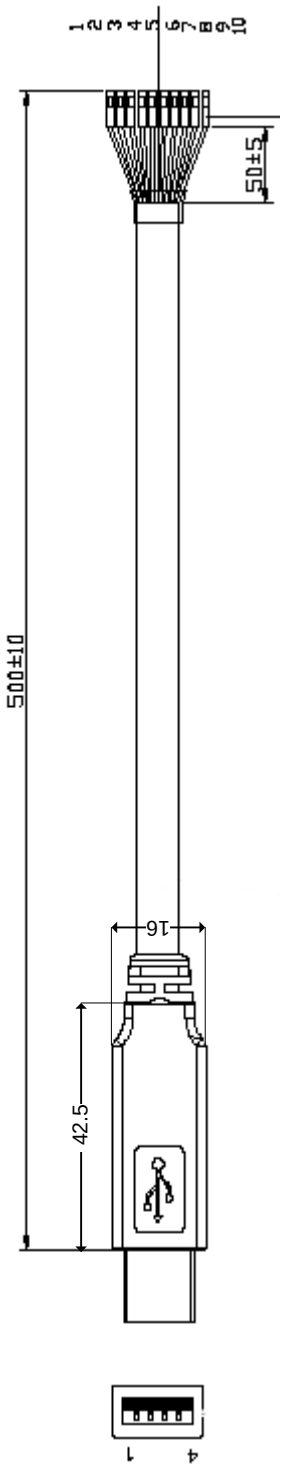

Figure 3-2 C232HM MPSSE Cable Mechanical Details (dimensions in mm)

Copyright © Future Technology Devices International Limited

3.2 C232HM MPSSE Cable Signal Descriptions

Colour	Pin Number	Name	Type	Description
Red	1	VCC	Output	Power Supply Output to target board.
Gray	6	GPIOL0	Input/Output	General Purpose input/output.
Purple	7	GPIOL1	Input/Output	General Purpose input/output.
White	8	GPIOL2	Input/Output	General Purpose input/output.
Blue	9	GPIOL3	Input/Output	General Purpose input/output.
Black	10	GND	GND	Device ground supply pin.

Table 3.1 Common Cable Signal Descriptions

Colour	Pin Number	Name	Type	Description
Orange	2	TCK	Output	Test Interface Clock
Yellow	3	TDI	Input	Test Data Input
Green	4	TDO	Output	Test Data Output
Brown	5	TMS	Output	Test Mode Select

Table 3.2 MPSSE Option JTAG - Signal Descriptions

Colour	Pin Number	Name	Type	Description
Orange	2	SK	Output	Serial Clock
Yellow	3	DO	Output	Serial data output
Green	4	DI	Input	Serial Data Input
Brown	5	CS	Output	Serial Chip Select

Table 3.3 MPSSE Option SPI - Signal Descriptions

Colour	Pin Number	Name	Type	Description
Orange	2	SCL	Output	Serial Clock
Yellow	3	SDA	Input/Output	Serial data signal shorted together to create bidirectional data(both yellow and green wires need to be shorted together)
Green	4			

Table 3.4 MPSSE Option I2C - Signal Descriptions

Copyright © Future Technology Devices International Limited

3.3 C232HM MPSSE Cable Electrical Parameters

3.3.1 C232HM-DDHSL-0 Electrical Parameters

Parameter	Description	Minimum	Typical	Maximum	Units	Conditions
VCC	Output Power Voltage	3.2	3.3	3.6	V	
I_O	Output Power Current	-	-	250	mA	
T	Operating Temperature Range	-40		+85	°C	

Table 3.5 C232HM-DDHSL-0 Operating Parameters

3.3.2 C232HM-EDHSL-0 Electrical Parameters

Parameter	Description	Minimum	Typical	Maximum	Units	Conditions
VCC	Output Power Voltage	4.75	5	5.25	V	
I_O	Supply Current	-	-	450	mA	Must be less that 2.5mA during suspend.
T	Operating Temperature Range	-40		+85	°C	

Table 3.6 C232HM-EDHSL-0 Power Supply Output Parameters

3.3.3 C232HM-DDHSL-0 and C232HM-EDHSL-0 I/O Characteristics

Parameter	Description	Minimum	Typical	Maximum	Units	Conditions
Voh	Output Voltage High	2.40	3.14		V	Ioh = +/-2mA I/O Drive strength* = 4mA
			3.20		V	I/O Drive strength* = 8mA
			3.22		V	I/O Drive strength* = 12mA
			3.22		V	I/O Drive strength* = 16mA
Vol	Output Voltage Low		0.18	0.40	V	Iol = +/-2mA I/O Drive strength* =

Copyright © Future Technology Devices International Limited

						4mA
			0.12		V	I/O Drive strength* = 8mA
			0.08		V	I/O Drive strength* = 12mA
			0.07		V	I/O Drive strength* = 16mA
Vil	Input low Switching Threshold		-	0.80	V	LVTTL
Vih	Input High Switching Threshold	2.00	-		V	LVTTL
Vt	Switching Threshold		1.50		V	LVTTL
Vt-	Schmitt trigger negative going threshold voltage	0.80	1.10	-	V	
Vt+	Schmitt trigger positive going threshold voltage		1.60	2.00	V	
Rpu	Input pull-up resistance	40	75	190	KΩ	Vin = 0
Rpd	Input pull-down resistance	40	75	190	KΩ	Vin =VCCIO
Iin	Input Leakage Current	15	45	85	µA	Vin = 0
Ioz	Tri-state output leakage current		±10		µA	Vin = 5.5V or 0

Table 3.7 C232HM-DDHSL-0 and C232HM-EDHSL-0 I/O Pin Characteristics

* The I/O drive strength and slow slew-rate are configurable in the EEPROM.

The I/O pins are +3.3v cells, which are +5V tolerant

Copyright © Future Technology Devices International Limited

4 Cable PCB Circuit Schematic

The circuit schematics for the small internal electronic circuit board, utilising the FTDI FT232H, which is encapsulated into the USB connector end of the cable, are shown in Figure 4.1 Circuit Schematic of C232HM-DDHSL-0 and Figure 4.2 - Circuit Schematic of PCB - C232HM-EDHSL-0.

Customised versions of these cables are also available. Users interested in customised versions of these cables should contact FTDI sales (sales1@ftdichip.com).

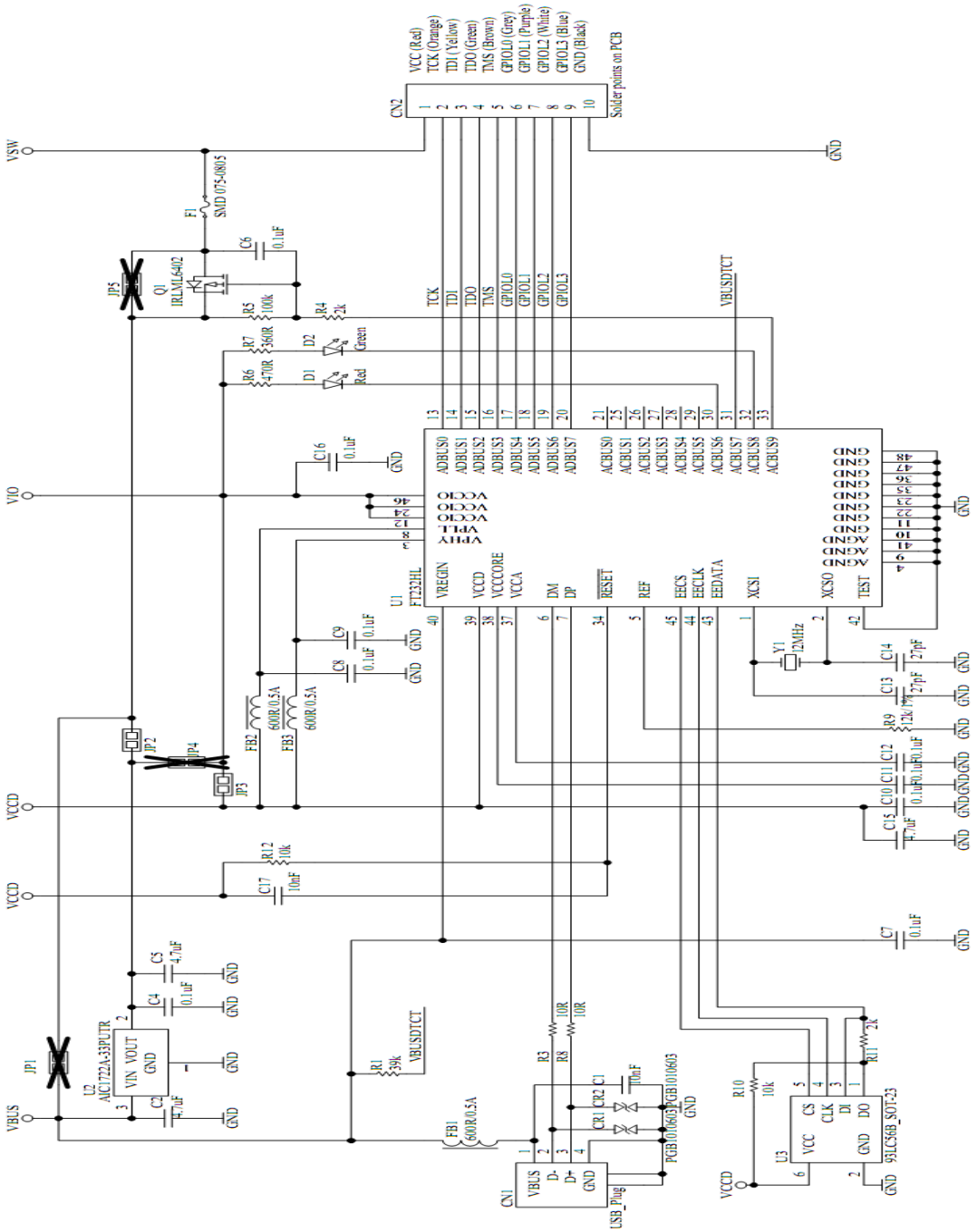

Figure 4.1 Circuit Schematic of C232HM-DDHSL-0

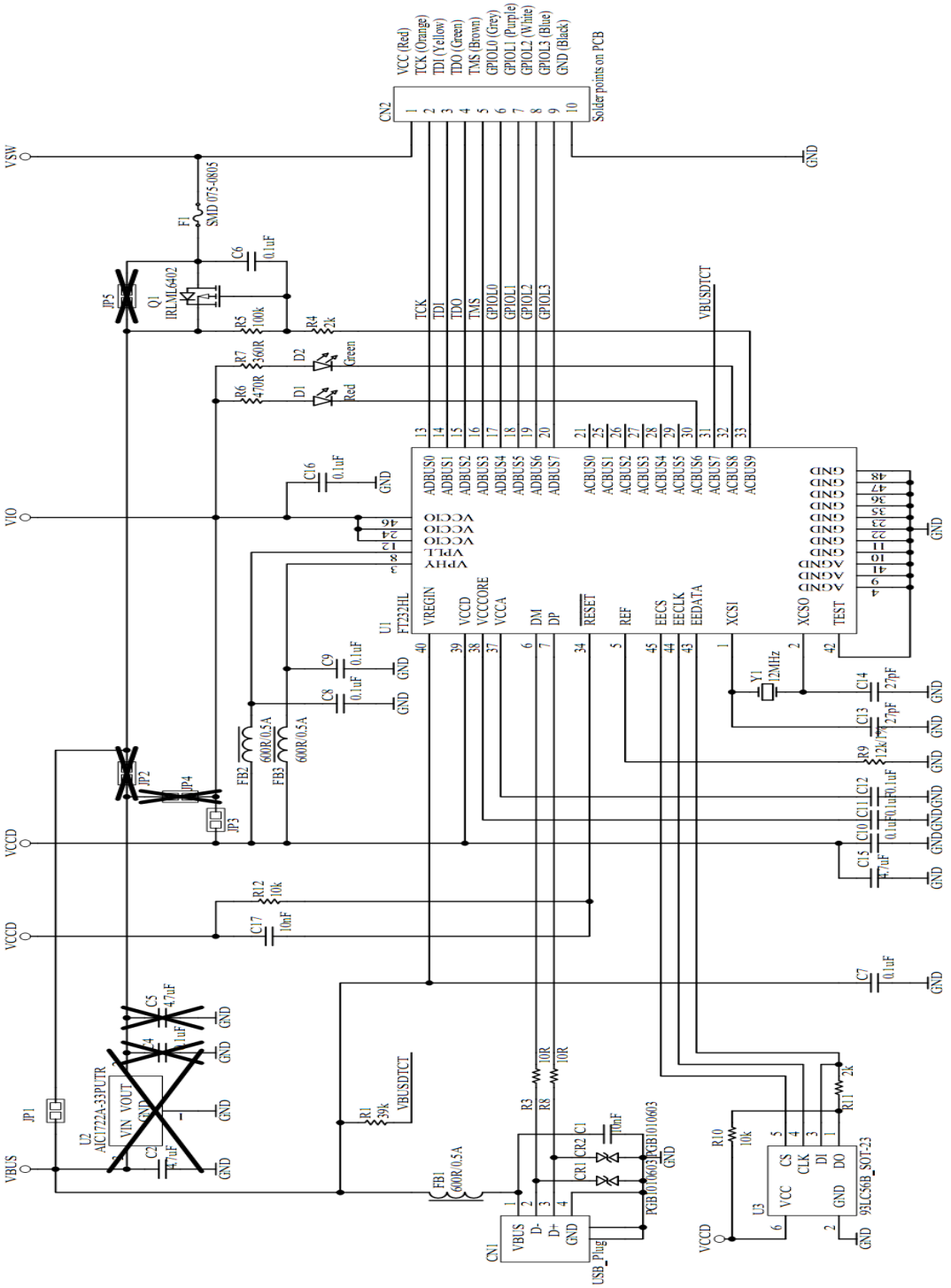

Figure 4.2 - Circuit Schematic of PCB - C232HM-EDHSL-0

5 Contact Information

Head Office – Glasgow, UK

Future Technology Devices International Limited
Unit 1, 2 Seaward Place, Centurion Business Park
Glasgow G41 1HH
United Kingdom
Tel: +44 (0) 141 429 2777
Fax: +44 (0) 141 429 2758

E-mail (Sales) sales1@ftdichip.com
E-mail (Support) support1@ftdichip.com
E-mail (General Enquiries) admin1@ftdichip.com

Branch Office – Tigard, Oregon, USA

Future Technology Devices International Limited
(USA)
7130 SW Fir Loop
Tigard, OR 97223
USA
Tel: +1 (503) 547 0988
Fax: +1 (503) 547 0987

E-Mail (Sales) us.sales@ftdichip.com
E-Mail (Support) us.support@ftdichip.com
E-Mail (General Enquiries) us.admin@ftdichip.com

Branch Office – Taipei, Taiwan

Future Technology Devices International Limited
(Taiwan)
2F, No. 516, Sec. 1, NeiHu Road
Taipei 114
Taiwan , R.O.C.
Tel: +886 (0) 2 8797 1330
Fax: +886 (0) 2 8751 9737

E-mail (Sales) tw.sales1@ftdichip.com
E-mail (Support) tw.support1@ftdichip.com
E-mail (General Enquiries) tw.admin1@ftdichip.com

Branch Office – Shanghai, China

Future Technology Devices International Limited
(China)
Room 1103, No.666 West Huaihai Road,
Shanghai, 200052
China
Tel: +86 21 62351596
Fax: +86 21 62351595

E-mail (Sales) cn.sales@ftdichip.com
E-mail (Support) cn.support@ftdichip.com
E-mail (General Enquiries) cn.admin@ftdichip.com

Web Site

http://ftdichip.com

Distributor and Sales Representatives

Please visit the Sales Network page of the FTDI Web site for the contact details of our distributor(s) and sales representative(s) in your country.

System and equipment manufacturers and designers are responsible to ensure that their systems, and any Future Technology Devices International Ltd (FTDI) devices incorporated in their systems, meet all applicable safety, regulatory and system-level performance requirements. All application-related information in this document (including application descriptions, suggested FTDI devices and other materials) is provided for reference only. While FTDI has taken care to assure it is accurate, this information is subject to customer confirmation, and FTDI disclaims all liability for system designs and for any applications assistance provided by FTDI. Use of FTDI devices in life support and/or safety applications is entirely at the user's risk, and the user agrees to defend, indemnify and hold harmless FTDI from any and all damages, claims, suits or expense resulting from such use. This document is subject to change without notice. No freedom to use patents or other intellectual property rights is implied by the publication of this document. Neither the whole nor any part of the information contained in, or the product described in this document, may be adapted or reproduced in any material or electronic form without the prior written consent of the copyright holder. Future Technology Devices International Ltd, Unit 1, 2 Seaward Place, Centurion Business Park, Glasgow G41 1HH, United Kingdom. Scotland Registered Company Number: SC136640

Appendix A - Cable EEPROM Configuration

Each C232HM MPSSE cable is controlled by the FTDI FT232H IC. This FT232H device contains an EEPROM which contains the USB configuration descriptors for that device. When the cable is plugged into a PC or a USB reset is performed, the PC will read these descriptors. The default values stored into the internal EEPROM are defined in the following table –

Parameter	Value	Notes
USB Vendor ID (VID)	0403h	FTDI default VID (hex)
USB Product UD (PID)	6014h	FTDI default PID (hex)
Serial Number Enabled?	Yes	
Serial Number	See Note	A unique serial number is generated and programmed into the EEPROM during device final test.
Manufacturer Name	FTDI	
Product Description	See note	Product description depends on the cable. The following lists the Product descriptions for each different cable. C232HM-DDHSL-0 C232HM-EDHSL-0
Max Bus Power Current	500mA	Includes power available from the cable plus power required for the FT232H
Power Source	Bus Powered	
Device Type	FT232H	
USB Version	0200	Returns USB 2.0 device description to the host. Note: The device is a USB 2.0 Hi-Speed device (480Mb/s).
Remote Wake Up	Disabled	500uA suspend limit when in this state
High Current I/Os	Enabled	Enables the high drive level on the CBUS I/O pins.
Load VCP Driver	Enabled	Makes the device load the VCP driver interface for the device.

Default Internal EEPROM Configuration

The internal EEPROM in the cable can be re-programmed over USB using the utility program FT_PROG. Both can be downloaded from www.ftdichip.com.

Copyright © Future Technology Devices International Limited

Appendix B - References

Document References

DS_FT232H

MPSSE application note - AN_108

Acronyms & Abbreviations

Terms	Description
DLL	Dynamic Link Library
EHCI	Enhanced Host Controller Interface
EEPROM	Electrically Erasable Programmable Read Only Memory
FPGA	Field Programmable Gate Array
IC	Integrated Circuit
MCU	Microcontroller Unit
RoHS	Restriction of Hazardous Substance
SIL	Single In Line
OHCI	Open Host Controller Interface
PLD	Programmable Logic Device
TTL	Transistor-Transistor Logic
USB	Universal Serial Bus
UART	Universal Asynchronous Receiver/Transmitter
UHCI	Universal Host Controller Interface

Copyright © Future Technology Devices International Limited

Appendix C - List of Figures and Tables

List of Figures

Figure 1-1 Using the C232HM MPSSE Cable 2
Figure 3-1 C232HM MPSSE Cable Connections (numbers refer to pad numbers on the PCB) 7
Figure 3-2 C232HM MPSSE Cable Mechanical Details (dimensions in mm) 8
Figure 4.1 Circuit Schematic of C232HM-DDHSL-0 12
Figure 4.2 - Circuit Schematic of PCB - C232HM-EDHSL-0 13

List of Tables

Table 1.1 C232HM MPSSE Cable Descriptions and Part Numbers 3
Table 3.1 Common Cable Signal Descriptions 9
Table 3.2 MPSSE Option JTAG - Signal Descriptions 9
Table 3.3 MPSSE Option SPI - Signal Descriptions 9
Table 3.4 MPSSE Option I2C - Signal Descriptions 9
Table 3.5 C232HM-DDHSL-0 Operating Parameters 10
Table 3.6 C232HM-EDHSL-0 Power Supply Output Parameters 10
Table 3.7 C232HM-DDHSL-0 and C232HM-EDHSL-0 I/O Pin Characteristics 11

Copyright © Future Technology Devices International Limited

Appendix D – Revision History

Document Title: C232HM USB 2.0 Hi-Speed to MPSSE Cable Datasheet
Document Reference No.: FT_000401
Clearance No.: FTDI# 214
Product Page: http://www.ftdichip.com/Products/Cables/USBMPSSE.htm
Document Feedback: Send Feedback

Revision	Changes	Date
Version 1.0	Initial Release	2011-07-21
Version 1.1	Updated schematics to give correct part number for the fuse and correct current limits in Table 1.1 Update Section 1.1 Linux version	2012-03-14
Version 1.2	Added Section 1.2 and 1.3 (CE & FCC Test and USB Compliant – TID Number)	2012-06-06
Version 1.2.1	Corrected the typo data in Table 3.5 and 3.6	2016-05-14
Version 1.3	Updated Section 1.2 to state the cables are fully CE and FCC certified. Updated Table "Default Internal EEPROM Configuration" as invert options are not available on FT232H	2019-02-19

Copyright © Future Technology Devices International Limited