CONSOLETS



APPLICATION

Consolets are ideal for mounting small control or instrumentation devices where the desirable access requires a 30- or 60-degree surface. These enclosures can be mounted on either of two sides for placement on desktops, pedestals or other flat surfaces.

SPECIFICATIONS

- 14 gauge steel
- Seams continuously welded and ground smooth; no holes or knockouts
- Captivated cover screws thread into sealed wells
- Bonding provision on cover
- Oil-resistant gasket and adhesive
- Control panel attached with continuous hinge along bottom edge

FINISH

ANSI 61 gray polyester powder paint inside and out over pretreated surfaces.

INDUSTRY STANDARDS

UL 508A Listed; Type 12, 13; File No. E61997
cUL Listed per CSA C22.2 No. 94; Type 12, 13; File No. E61997

NEMA/EEMAC Type 12, 13
CSA File Number 42186: Type 12
IEC 60529, IP65

ACCESSORIES

See also Accessories.
Industrial Corrosion Inhibitors
Latch Kits for Type 4 and 12 Enclosures
Mounting Bracket Kits
Touch-Up Paint
Steel and Stainless Steel Window Kits

NOTES

See the Stainless Steel chapter for information on related stainless steel products.

BULLETIN: C5, P1

Standard Product **Consolets**

Catalog Number	AxBxC in./mm	E in./mm	H in./mm	J in./mm	K in./mm	L in./mm	N in./mm
C8C8	8.00 x 8.00 x 7.09 203 x 203 x 180	5.62 143	8.28 210	8.28 210	7.50 191	6.62 168	7.44 189
C8C12	8.00 x 12.00 x 7.09 203 x 305 x 180	5.62 143	8.28 210	12.28 312	11.50 292	6.62 168	7.44 189
C8C16	8.00 x 16.00 x 7.09 203 x 406 x 180	5.62 143	8.28 210	16.28 414	15.50 394	6.62 168	7.44 189
C8C20	8.00 x 20.00 x 7.09 203 x 508 x 180	5.62 143	8.28 210	20.28 515	19.50 495	6.62 168	7.44 189
C12C12	12.00 x 12.00 x 9.09 305 x 305 x 231	7.62 194	12.28 312	12.28 312	11.50 292	10.62 270	10.91 277
C12C16	12.00 x 16.00 x 9.09 305 x 406 x 231	7.62 194	12.28 312	16.28 414	15.50 394	10.62 270	10.91 277
C12C20	12.00 x 20.00 x 9.09 305 x 508 x 231	7.62 194	12.28 312	20.28 515	19.50 495	10.62 270	10.91 277
C12C24	12.00 x 24.00 x 9.09 305 x 610 x 231	7.62 194	12.28 312	24.28 617	23.50 597	10.62 270	10.91 277
C16C16	16.00 x 16.00 x 11.09 406 x 406 x 282	9.62 244	16.28 414	16.28 414	15.50 394	14.62 371	14.38 365
C16C20	16.00 x 20.00 x 11.09 406 x 508 x 282	9.62 244	16.28 414	20.28 515	19.50 495	14.62 371	14.38 365
C16C24	16.00 x 24.00 x 11.09 406 x 610 x 282	9.62 244	16.28 414	24.28 617	23.50 597	14.62 371	14.38 365
C16C30	16.00 x 30.00 x 11.09 406 x 762 x 282	9.62 244	16.28 414	30.28 769	29.50 749	14.62 371	14.38 365
C16C36	16.00 x 36.00 x 11.09 406 x 914 x 282	9.62 244	16.28 414	36.28 922	35.50 902	14.62 371	14.38 365
C20C20	20.00 x 20.00 x 13.09 508 x 508 x 332	11.62 295	20.28 515	20.28 515	18.62 473	18.62 473	17.84 453
C20C24	20.00 x 24.00 x 13.09 508 x 610 x 332	11.62 295	20.28 515	24.28 617	22.62 575	18.62 473	17.84 453
C20C30	20.00 x 30.00 x 13.09 508 x 762 x 332	11.62 295	20.28 515	30.28 769	28.62 727	18.62 473	17.84 453

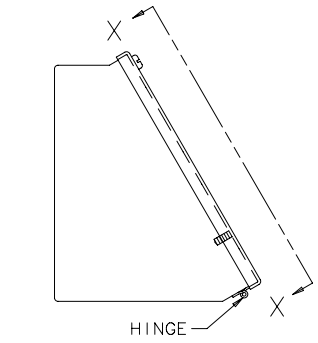

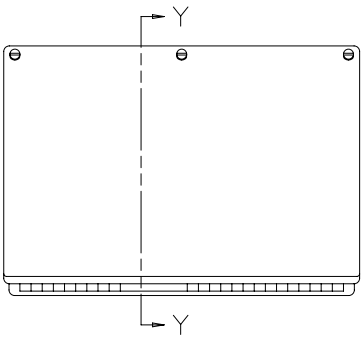

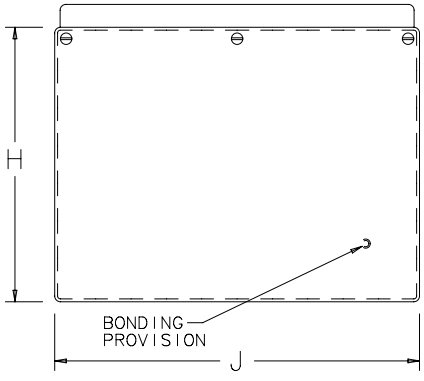

VIEW X–X

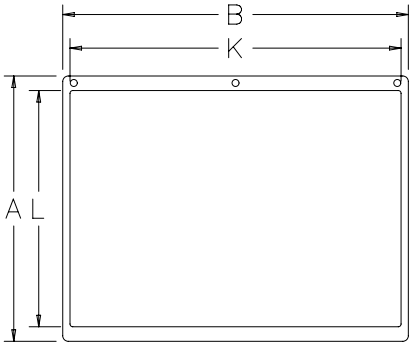

VIEW X–X
with cover removed

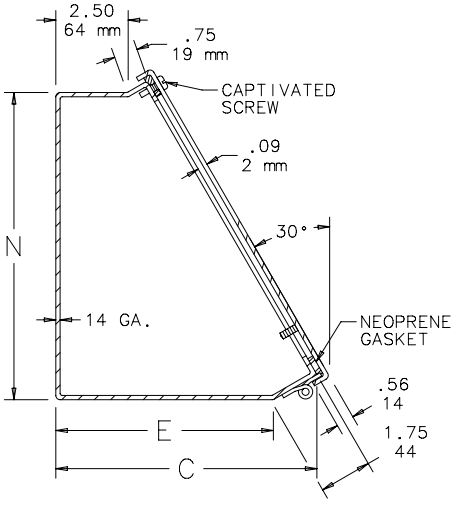

SECTION Y–Y

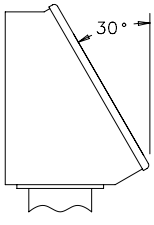

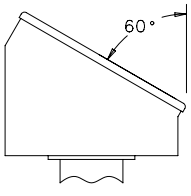

C2760-C

Standard Product **Pedestal Columns and Bases for Consolets**

Catalog Number	AxBxC in./mm	Description
A44CC0L	35.00 x 4.00 x 4.00 889 x 102 x 102	Straight Pedestal Column
A66CC0L	35.00 x 6.00 x 6.00 889 x 152 x 152	Straight Pedestal Column
A18SBASE	18.00 x 18.00 457 x 457	Pedestal Base
A24SBASE	24.00 x 24.00 610 x 610	Pedestal Base