Typical Applications

Base Stations
Test Equipment
Synthesizers

Features

AT-Cut Crystal
Dual-inline oscillator
Surface Mount Option



Previous Vectron Model Numbers TQDILP; TQDILC; TQDILAC

Frequency range 1 MHz – 90 MHz

Standard frequencies 10.00; 16.384; 19.44; 30.72; 32.768; MHz; 50.00; 77.76 MHz;

Frequency stabilities[1]

Parameter	Min	Typ	Max.	Units	Operating temp range	Ordering Code[5]
vs. operating temperature range	-100.0		+100.0	ppm	-55 … +125°C	H104
(Referenced to +25°C)	-50.0		+50.0	ppm	-55 … +125°C	H505
	-50.0		+50.0	ppm	-55 … +105°C	G505
	-25.0		+25.0	ppm	-55 … +105°C	G255
	-15.0		+15.0	ppm	-40 … +85°C	F255
	-50.0		+50.0	ppm	-20 … +70°C	D505
	-20.0		+20.0	ppm	-20 … +70°C	D205
	-10.0		+10.0	ppm	-20 … +70°C	D105
	-7.5		+7.5	ppm	-20 … +70°C	D756
	-5.0		+5.0	ppm	-20 … +70°C	D506
Parameter	**Min**	**Typ**	**Max.**	**Units**	**Condition**	**Ordering Code[5]**
Initial tolerance	-100.0		+100.0	ppm		T104
	-50.0		+50.0	ppm		T505
	-20.0		+20.0	ppm		T205
	-10.0		+10.0	ppm		T105
	-5.0		+5.0	ppm		T506
vs. supply voltage change	-2.0		+2.0	ppm	V_S ± 5%	
vs. load change	-1.0		+1.0	ppm	Load ± 10% fo ≤ 90 MHz	
vs. aging /1. Year	-2.0		+2.0	ppm		

Supply voltage

Parameter	Min	Typ	Max.	Units	Condition	Ordering Code[5]
Supply voltage (Vs)	4.75	5.0	5.25	VDC		SV050
Current consumption			40	mA	@ HCMOS fo ≤ 90.0 MHz	

RF output

Parameter	Min	Typ	Max.	Units	Condition	Ordering Code[5]
Signal		HCMOS				RFH
Load		15.0		pF		
Rise and Fall time			5	ns	@ 15 pF 10 to 90 %	
Duty cycle	40		60	%	@ Vs/2	

Vectron International
Headquarters
267 Lowell Road
Hudson, New Hampshire 03051
+1-888-328-7661 tel
+1-888-329-8328 fax

Vectron International LLC.
100 Watts Street
Mount Holly Springs, PA 17065

USA
+1-717-486-3411 tel
+1-717-486-5920 fax

Vectron international GmbH & Co. KG
Landstrasse
D-74924 Neckarbischofsheim
Germany
+49-07268-801-0 tel
+49-07268-801-281 fax

Vectron Asia Pacific Sales Office
Unit 3119 31st Floor, Jin Mao Tower, 88 Century Boulevard, Shanghai, P.R. China 200120
+86 21 28909740 tel.
+86 21 28909240 fax

Additional parameters

Parameter	Min	Typ	Max.	Units	Condition	
Phase Noise		-80		dBc/Hz	10 Hz	@10.000
		-110		dBc/Hz	100 Hz	MHz
		-135		dBc/Hz	1 kHz	HCMOS
		-145		dBc/Hz	10 kHz	5.0 V
		-150		dBc/Hz	100 kHz	
Weight			6	g		
Processing & Packing	handling&processing note					

Vectron International
Headquarters
267 Lowell Road
Hudson, New Hampshire 03051
+1-888-328-7661 tel
+1-888-329-8328 fax

Vectron International LLC.
100 Watts Street
Mount Holly Springs, PA 17065

USA
+1-717-486-3411 tel
+1-717-486-5920 fax

Vectron international GmbH & Co. KG
Landstrasse
D-74924 Neckarbischofsheim
Germany
+49-07268-801-0 tel
+49-07268-801-281 fax

Vectron Asia Pacific Sales Office
Unit 3119 31st Floor, Jin Mao Tower, 88
Century Boulevard, Shanghai,
P.R. China 200120
+86 21 28909740 tel.
+86 21 28909240 fax

Enclosures

Type G125

Package Codes:

Code	Height "H"	Pin Length "L"
A1	7.5	5.85

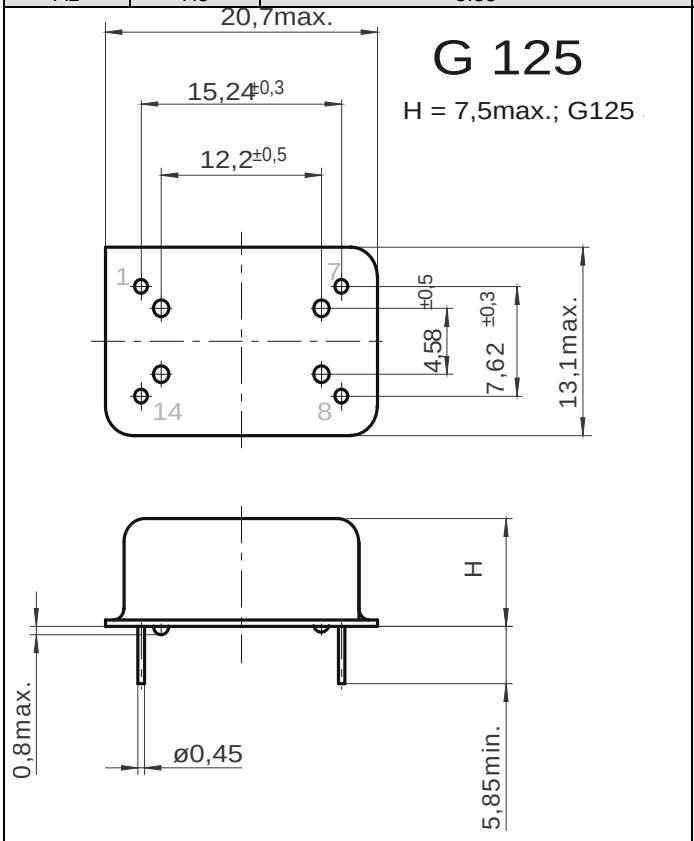

Dimensions: mm

Pin Connections

1 NC
7 Ground (Case)
8 RF Output
14 Supply Voltage Input (Vs)

Outline Drawing: G125

Type G175

Code	Height "H"	Pin Length "L"
B1	9.4	NA

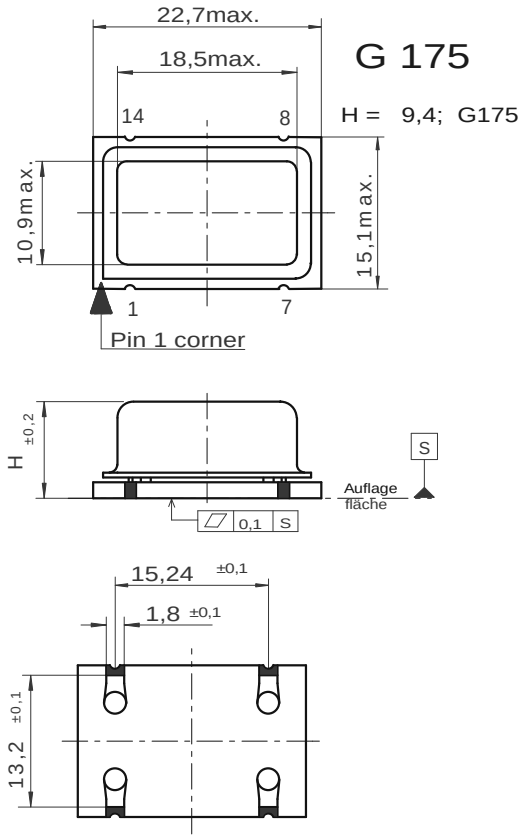

Dimensions: mm

Pin Connections

1 NC
7 Ground (Case)
8 RF Output
14 Supply Voltage Input (Vs)

Outline Drawing: G175

Marking

C1410A1-xxxx
frequency
* C AYYWW

Absolute Maximum Ratings

Parameter	Min	Typ	Max.	Units	Condition
Supply voltage (Vs)			7	V	
Operable temperature range	-40		+80	°C	For temperature Code F, D
Storage temperature range	-40		+90	°C	For temperature Code F, D

Vectron International
Headquarters
267 Lowell Road
Hudson, New Hampshire 03051
+1-888-328-7661 tel
+1-888-329-8328 fax

Vectron International LLC.
100 Watts Street
Mount Holly Springs, PA 17065

USA
+1-717-486-3411 tel
+1-717-486-5920 fax

Vectron international GmbH & Co. KG
Landstrasse
D-74924 Neckarbischofsheim
Germany
+49-07268-801-0 tel
+49-07268-801-281 fax

Vectron Asia Pacific Sales Office
Unit 3119 31st Floor, Jin Mao Tower, 88 Century Boulevard, Shanghai, P.R. China 200120
+86 21 28909740 tel.
+86 21 28909240 fax

Standard Shipping Method

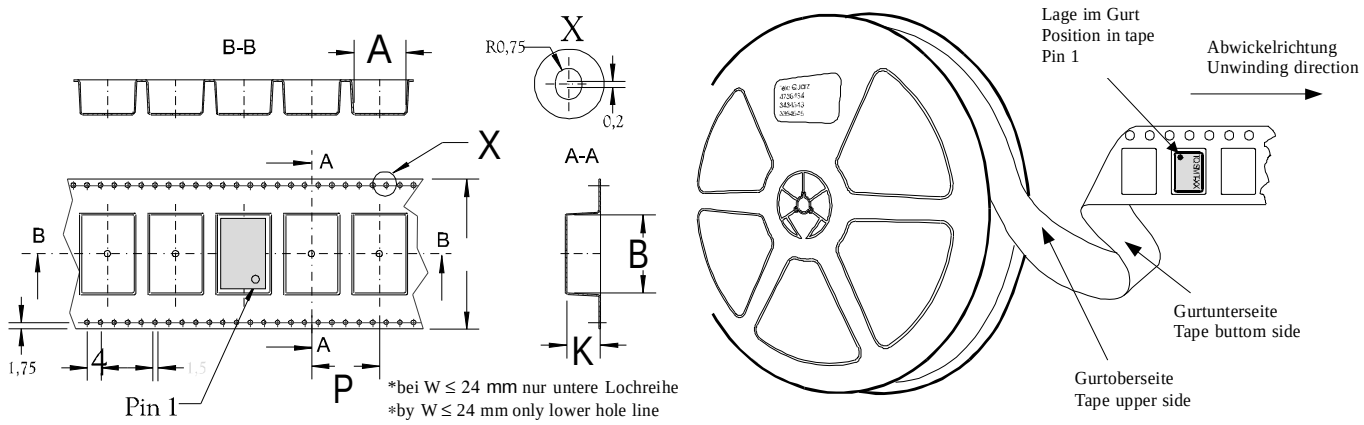

Production tolerance complying DIN IEC 286-3

Enclosure Type	Tape width W [mm]	Quantity per meter	Quantity per reel	Dimension P
G175	44	50	300	20

Recommended Reflow Profile

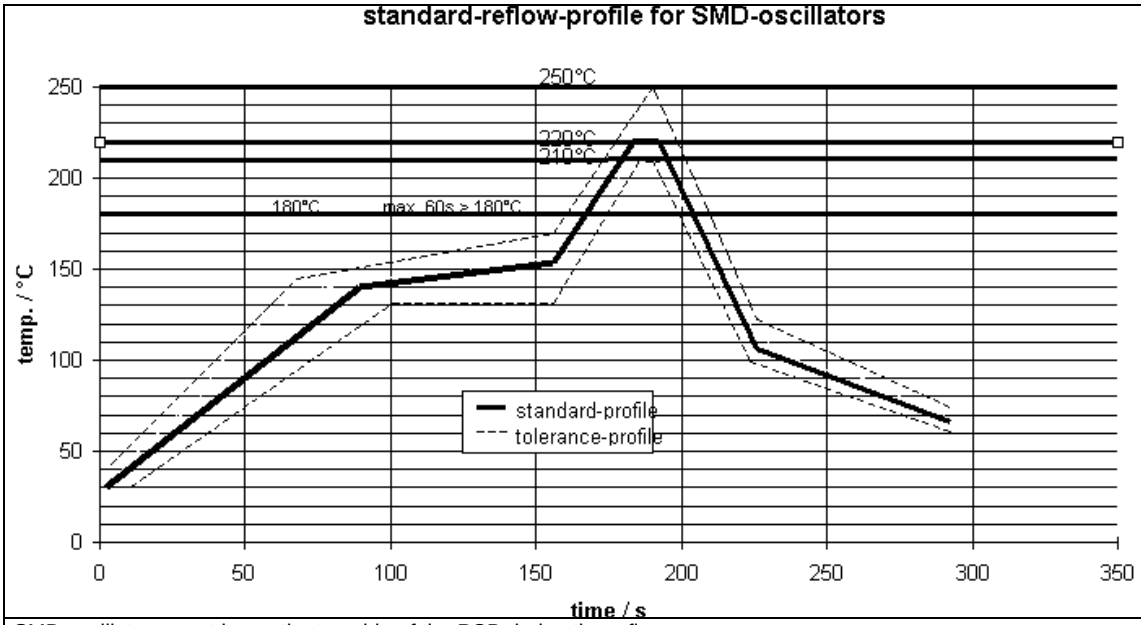

SMD oscillators must be on the top side of the PCB during the reflow process.

Vectron International
Headquarters
267 Lowell Road
Hudson, New Hampshire 03051
+1-888-328-7661 tel
+1-888-329-8328 fax

Vectron International LLC.
100 Watts Street
Mount Holly Springs, PA 17065

USA
+1-717-486-3411 tel
+1-717-486-5920 fax

Vectron international GmbH & Co. KG
Landstrasse
D-74924 Neckarbischofsheim
Germany
+49-07268-801-0 tel
+49-07268-801-281 fax

Vectron Asia Pacific Sales Office
Unit 3119 31st Floor, Jin Mao Tower, 88 Century Boulevard, Shanghai, P.R. China 200120
+86 21 28909740 tel.
+86 21 28909240 fax

How to Order this Product:

Step 1	Use this worksheet to forward the following information to your factory representative:				
Model	**Stability Code**	**Initial tolerance**	**Supply Voltage Code**	**RF Output Code**	**Package Code**
C1410					
Example: C1410	*D205*	*T104*	*SV050*	*RFH*	*A1*

Step 2	The factory representative will then respond with a Vectron Model Number in the following Configuration:		
Model	**Package Code**	**Dash**	**Dash Number**
C1410	[Customer Specified Package Code]	-	[Factory Generated 4 digit number]

Typical P/N = C1410A1-0001

Notes:

1 Contact factory for improved stabilities or additional product options. Not all options and codes are available at all frequencies.
2 Unless otherwise stated all values are valid after warm-up time and refer to typical conditions for supply voltage, frequency control voltage, load, temperature (25°C)
3 Phase noise degrades with increasing output frequency.
4 Subject to technical modification.
5 Contact factory for availability.

Vectron International
Headquarters
267 Lowell Road
Hudson, New Hampshire 03051
+1-888-328-7661 tel
+1-888-329-8328 fax

Vectron International LLC.
100 Watts Street
Mount Holly Springs, PA 17065

USA
+1-717-486-3411 tel
+1-717-486-5920 fax

Vectron international GmbH & Co. KG
Landstrasse
D-74924 Neckarbischofsheim
Germany
+49-07268-801-0 tel
+49-07268-801-281 fax

Vectron Asia Pacific Sales Office
Unit 3119 31st Floor, Jin Mao Tower, 88 Century Boulevard, Shanghai, P.R. China 200120
+86 21 28909740 tel.
+86 21 28909240 fax