Typical Applications

Base Stations
Test Equipment
Synthesizers

Features

Surface Mount Package
Reflow Process Compatible
AT-Cut Crystal
SONET Minimum Clock Specification
Low Phase Noise
Tight Tolerances

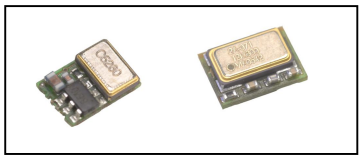

Frequency range

1 MHz – 175 MHz

Standard frequencies

17.408; 24.705; 30.720; 32.768; 34.368; 50; 76.8 MHz
77.76; 100; 125; 150; 155.52; 156.25; 175 MHz

Frequency stabilities[1] [Standard]

Parameter	Min	Typ	Max.	Units	Operating temp range	Ordering Code[5]
vs. operating temperature range (Referenced to +25°C)	-10.0		+10.0	ppm	-20 … +70°C	D105
Parameter	**Min**	**Typ**	**Max.**	**Units**	**Condition**	
Initial tolerance	-5.0		+5.0	ppm		
vs. supply voltage change	-1.0		+1.0	ppm	V_S ± 5%	
vs. load change	-1.0		+1.0	ppm	Load ± 5%	
vs. aging /1. Year	-3.0		+3.0	ppm		
vs. aging / year (followingYears)	-1.0		+1.0	ppm		

Frequency stabilities[1] [meets SONET Minimum Clock Specification - Option]

Parameter	Min	Typ	Max.	Units	Operating temp range	Ordering Code[5]
vs. operating temperature range					-20 … +70°C	D205
Parameter	**Min**	**Typ**	**Max.**	**Units**	**Condition**	
overall tolerance	-20.0		+20.0	ppm	(15 Years aging, temp, initial, supply, load)	

Supply voltage

Parameter	Min	Typ	Max.	Units	Condition	Ordering Code[5]
Supply voltage (Vs)	4.75	5.0	5.25	VDC		SV050
Current consumption			40	mA	@ HCMOS	
Current consumption			90	mA	@ PECL	
Supply voltage (Vs)	3.135	3.3	3.465	VDC		SV033
Current consumption			30	mA	@ LVHCMOS	
Current consumption			80	mA	@ LVPECL	
Current consumption			25	mA	@ LVDS	

Vectron International
Headquarters
267 Lowell Road
Hudson, New Hampshire 03051
+1-888-328-7661 tel
+1-888-329-8328 fax

Vectron International LLC.
100 Watts Street
Mount Holly Springs, PA 17065

USA
+1-717-486-3411 tel
+1-717-486-5920 fax

Vectron international GmbH & Co. KG
Landstrasse
D-74924 Neckarbischofsheim
Germany
+49-07268-801-0 tel
+49-07268-801-281 fax

Vectron Asia Pacific Sales Office
1F-2F, No 8 Workshop, No 308 Fenju Road,
WaiGaoQiao Free Trade Zone, Pudong,
Shanghai, P.R. China 200131
+86 21 5048 0777 tel.
+86 21 5048 1881 fax

RF output

Parameter	Min	Typ	Max.	Units	Condition	Ordering Code[5]
Signal		HCMOS				RFH
Load		15.0		pF		
Rise and Fall time			5	ns	@ 15 pF 10 to 90 %	
Duty cycle	40		60	%	@ Vs/2	
Signal		PECL				RFP
Load		50		Ω	Vs - 2V	
Rise and Fall time			1	ns	20 to 80 %	
Duty cycle	45		55	%		
Signal		LVDS				RFL
Load		100		Ω		
Rise and Fall time			1	ns	10 to 90 %	
Duty cycle	40		60	%		

Additional parameters

Parameter	Min	Typ	Max.	Units	Condition	
Phase Noise		-85		dBc/Hz	10 Hz	@49,408 MHz
		-120		dBc/Hz	100 Hz	HCMOS
		-145		dBc/Hz	1 kHz	3,3V
		-155		dBc/Hz	10 kHz	
		-160		dBc/Hz	100 kHz	
Jitter		0,2		ps RMS	@ 12 kHz to 20 MHz	
Phase Noise		-80		dBc/Hz	10 Hz	@89,6 MHz
		-108		dBc/Hz	100 Hz	PECL
		-134		dBc/Hz	1 kHz	3,3V
		-140		dBc/Hz	10 kHz	
		-141		dBc/Hz	100 kHz	
Jitter		0,6		ps RMS	@ 12 kHz to 20 MHz	
Phase Noise		-80		dBc/Hz	10 Hz	@125 MHz
		-115		dBc/Hz	100 Hz	PECL
		-135		dBc/Hz	1 kHz	3,3V
		-141		dBc/Hz	10 kHz	
		-141		dBc/Hz	100 kHz	
Jitter		0,6		ps RMS	@ 12 kHz to 20 MHz	
Weight			2	g		
Processing & Packing		handling&processing note				

Vectron International
Headquarters
267 Lowell Road
Hudson, New Hampshire 03051
+1-888-328-7661 tel
+1-888-329-8328 fax

Vectron International LLC.
100 Watts Street
Mount Holly Springs, PA 17065

USA
+1-717-486-3411 tel
+1-717-486-5920 fax

Vectron international GmbH & Co. KG
Landstrasse
D-74924 Neckarbischofsheim
Germany
+49-07268-801-0 tel
+49-07268-801-281 fax

Vectron Asia Pacific Sales Office
1F-2F, No 8 Workshop, No 308 Fenju Road,
WaiGaoQiao Free Trade Zone, Pudong,
Shanghai, P.R. China 200131
+86 21 5048 0777 tel.
+86 21 5048 1881 fax

Enclosures

Type G241 < 53 MHz			Type G251 > 1 MHz		
Package Codes:					
Code A1	Height "H" 2,3 mm		Code B1	Height "H" 2,3 mm	

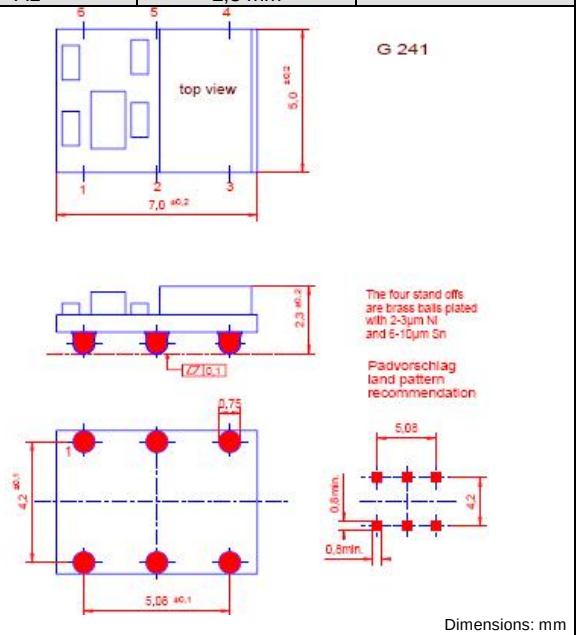

Dimensions: mm

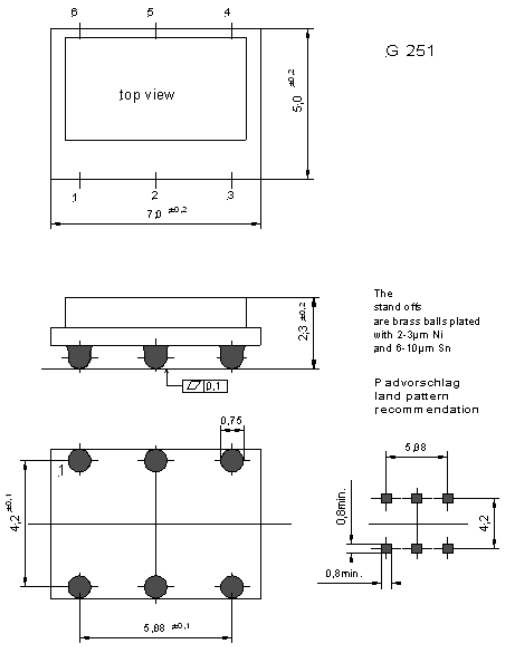

Dimensions: mm

Pin Connections	Pin Connections
1 N/C 2 N/C / Enable (optional) 3 Ground 4 RF Output 5 N/C 6 Supply Voltage Input (Vs)	1 N/C 2 N/C / Enable (optional) 3 Ground 4 RF Output 5 Complementary RF Output / (N/C: HCMOS only) 6 Supply Voltage Input (Vs)

true table	HCMOS		LVPECL + LVDS	
Pin 2	Pin 4	Pin 5	Pin 4	Pin 5
High	Data	N/C	No Data	No Data
Open	Data	N/C	Data	compl. Data
Low	High Tristate	N/C	Data	compl. Data

Marking

1A1-xxx
frequency
* VI AYYWW

Vectron International
Headquarters
267 Lowell Road
Hudson, New Hampshire 03051
+1-888-328-7661 tel
+1-888-329-8328 fax

Vectron International LLC.
100 Watts Street
Mount Holly Springs, PA 17065

USA
+1-717-486-3411 tel
+1-717-486-5920 fax

Vectron international GmbH & Co. KG
Landstrasse
D-74924 Neckarbischofsheim
Germany
+49-07268-801-0 tel
+49-07268-801-281 fax

Vectron Asia Pacific Sales Office
1F-2F, No 8 Workshop, No 308 Fenju Road,
WaiGaoQiao Free Trade Zone, Pudong,
Shanghai, P.R. China 200131
+86 21 5048 0777 tel.
+86 21 5048 1881 fax

Absolute Maximum Ratings

Parameter	Min	Typ	Max.	Units	Condition
Supply voltage (Vs)			7	V	
Operable temperature range Storage temperature range	-30 -40		+80 +90	°C °C	

Typical Phase Noise and Jitter

(49,408 MHz; HCMOS output)

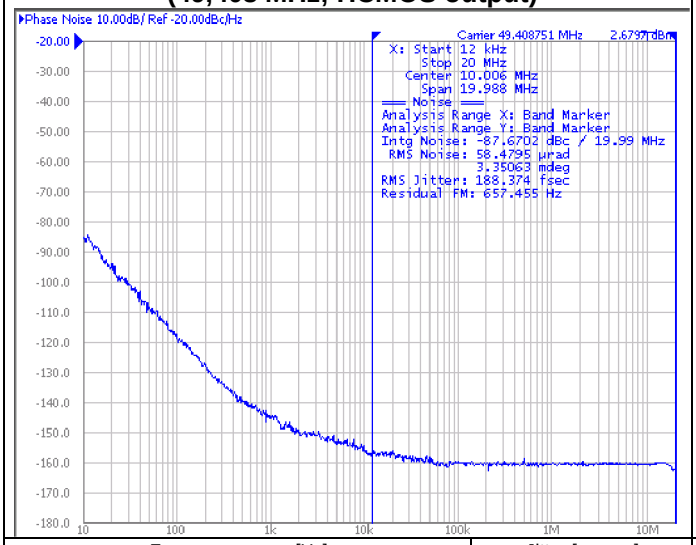

Frequency range [Hz]	Jitter [ps rms]
12kHz to 20MHz	0.188ps

(89,6 MHz; PECL output)

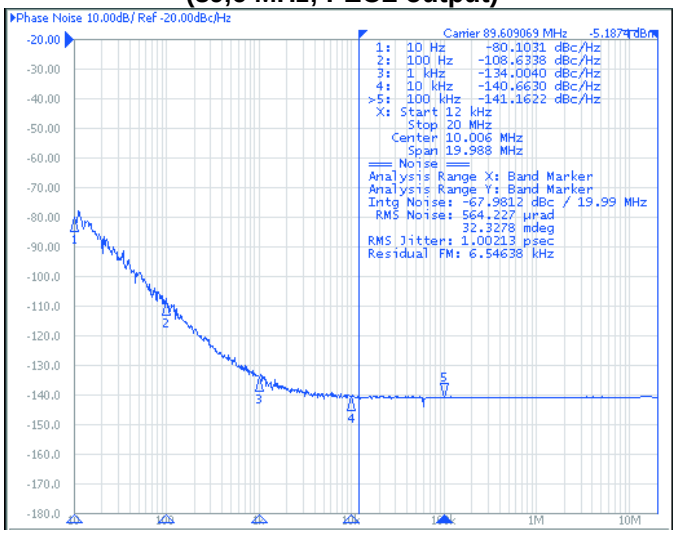

Frequency range [Hz]	Jitter [ps rms]
12kHz to 20MHz	1.002ps

(125 MHz; PECL output)

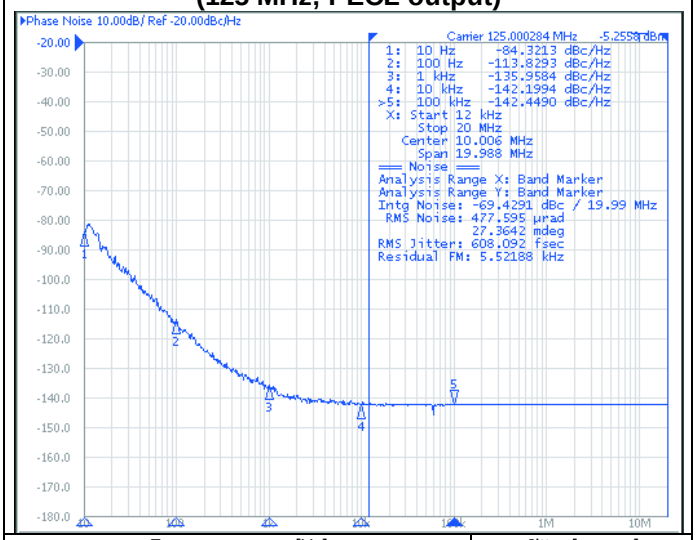

Frequency range [Hz]	Jitter [ps rms]
12kHz to 20MHz	0.608ps

Vectron International
Headquarters
267 Lowell Road
Hudson, New Hampshire 03051
+1-888-328-7661 tel
+1-888-329-8328 fax

Vectron International LLC.
100 Watts Street
Mount Holly Springs, PA 17065

USA
+1-717-486-3411 tel
+1-717-486-5920 fax

Vectron international GmbH & Co. KG
Landstrasse
D-74924 Neckarbischofsheim
Germany
+49-07268-801-0 tel
+49-07268-801-281 fax

Vectron Asia Pacific Sales Office
1F-2F, No 8 Workshop, No 308 Fenju Road,
WaiGaoQiao Free Trade Zone, Pudong,
Shanghai, P.R. China 200131
+86 21 5048 0777 tel.
+86 21 5048 1881 fax

Typical frequency stability vs temp

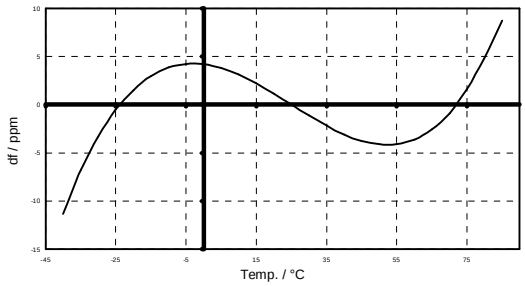

Standard Shipping Method

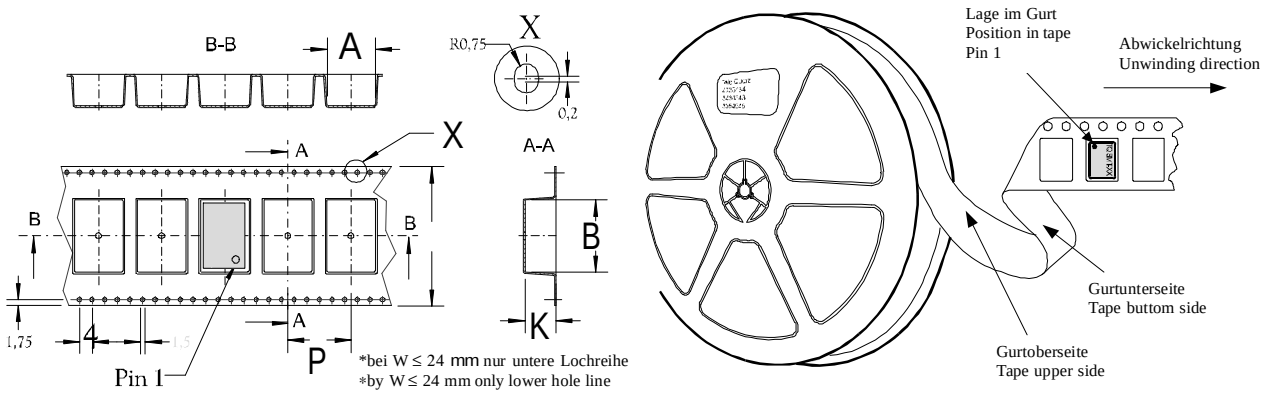

Production tolerance complying DIN IEC 286-3

Enclosure Type	Tape width W [mm]	Quantity per meter	Quantity per reel	Dimension P
G218B / G223B	24	83,3	850	12

Recommended Reflow Profile

Solderprofile:

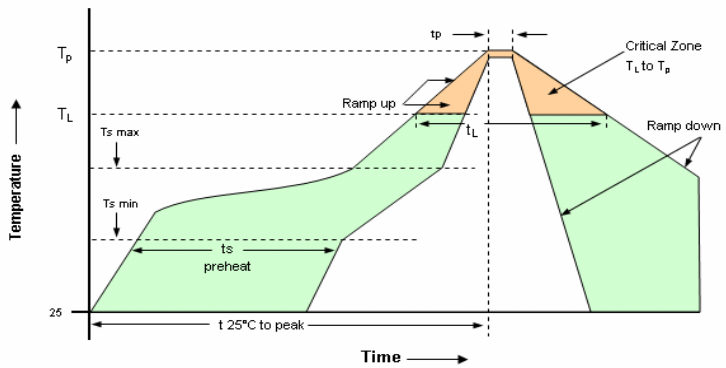

Profile Feature	Pb-Free Assembly /Sn-Pb Assembly	Profile Feature	Pb-Free Assembly /Sn-Pb Assembly

Vectron International
Headquarters
267 Lowell Road
Hudson, New Hampshire 03051
+1-888-328-7661 tel
+1-888-329-8328 fax

Vectron International LLC.
100 Watts Street
Mount Holly Springs, PA 17065

USA
+1-717-486-3411 tel
+1-717-486-5920 fax

Vectron international GmbH & Co. KG
Landstrasse
D-74924 Neckarbischofsheim
Germany
+49-07268-801-0 tel
+49-07268-801-281 fax

Vectron Asia Pacific Sales Office
1F-2F, No 8 Workshop, No 308 Fenju Road,
WaiGaoQiao Free Trade Zone, Pudong,
Shanghai, P.R. China 200131
+86 21 5048 0777 tel.
+86 21 5048 1881 fax

Average ramp-up rate (T_L to Tp)	3°C/second max.	Time 25°C to Peak Temperature	8 minutes max.
Preheat -Temperature Min Ts_{min}) -Temperature Min Ts_{max}) -Time (min to max) (ts)	150°c 200°c 60-180 seconds	Time maintainted above - Temperature (T_L) - Time (t_L)	 217°C 60-150 seconds
Ts_{max} to T_L - Ramp-up Rate	3°C/second max.		
Time maintainted above - Temperature (T_L) - Time (t_L)	217°C 60-150 seconds	Time within 5°C of actual Peak Temperature (tp)	20-40 seconds
Peak Temperature (Tp)	max 260°C	Ramp-down Rate	6°C/second max.

Note: All temperatures refer to topside of the package, measured on the package body surface.
SMD oscillators must be on the top side of the PCB during the reflow process.

Vectron International
Headquarters
267 Lowell Road
Hudson, New Hampshire 03051
+1-888-328-7661 tel
+1-888-329-8328 fax

Vectron International LLC.
100 Watts Street
Mount Holly Springs, PA 17065

USA
+1-717-486-3411 tel
+1-717-486-5920 fax

Vectron international GmbH & Co. KG
Landstrasse
D-74924 Neckarbischofsheim
Germany
+49-07268-801-0 tel
+49-07268-801-281 fax

Vectron Asia Pacific Sales Office
1F-2F, No 8 Workshop, No 308 Fenju Road,
WaiGaoQiao Free Trade Zone, Pudong,
Shanghai, P.R. China 200131
+86 21 5048 0777 tel.
+86 21 5048 1881 fax

How to Order this Product:

Model	Stability Code	Supply Voltage Code	RF Output Code	Package Code	Frequency Control / Enable	Frequency
C1260	D105	SV050	RFH	A1		

vs.operat. temp. range:

D105: ±10ppm -20 … +70°C
D205: -20 … +70°C

Enclosures:

A1: G241
B1: G251

Signal:

RFH: HCMOS
RFP: PECL
RFL: LVDS

Supply:

SV050: 5V
SV033: 3.3V

Dimension: mm

Vectron International
Headquarters
267 Lowell Road
Hudson, New Hampshire 03051
+1-888-328-7661 tel
+1-888-329-8328 fax

Vectron International LLC.
100 Watts Street
Mount Holly Springs, PA 17065

USA
+1-717-486-3411 tel
+1-717-486-5920 fax

Vectron international GmbH & Co. KG
Landstrasse
D-74924 Neckarbischofsheim
Germany
+49-07268-801-0 tel
+49-07268-801-281 fax

Vectron Asia Pacific Sales Office
1F-2F, No 8 Workshop, No 308 Fenju Road,
WaiGaoQiao Free Trade Zone, Pudong,
Shanghai, P.R. China 200131
+86 21 5048 0777 tel.
+86 21 5048 1881 fax