KEMET Part Number: C1206X473KARACTU

(C1206X473KARAC7800)

SMD Comm X7R Tip-Ring, Ceramic, 0.047 uF, 10%, 250 VDC, X7R, SMD, MLCC, FT-CAP, Temperature Stable, Tin Termination, 1206

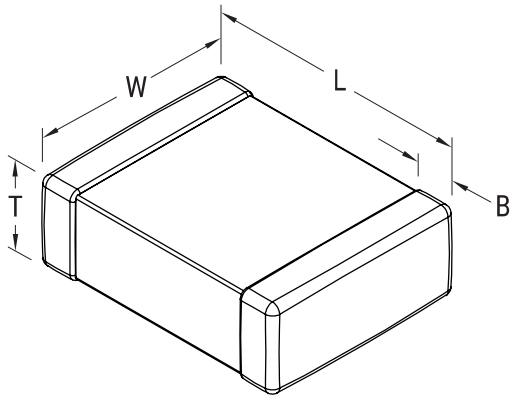

Dimensions	
L	3.3mm +/-0.4mm
W	1.6mm +/-0.35mm
T	1mm +/-0.20mm
B	0.6mm +/-0.25mm

Packaging Specifications	
Packaging:	T&R, 180mm, Plastic Tape
Packaging Quantity:	2500

General Information	
Supplier:	KEMET
Series:	SMD Comm X7R Tip-Ring
Style:	SMD Chip
Description:	SMD, MLCC, FT-CAP, Temperature Stable, Tin Termination
Features:	Tin Termination
RoHS:	Yes
Termination:	Flexible Termination
Marking:	No
Miscellaneous:	Note: Referee time for X7R dielectric for this part number is 1000 hours
Chip Size:	1206

Specifications	
Capacitance:	0.047 uF
Capacitance Tolerance:	10%
Voltage DC:	250 VDC
Dielectric Withstanding Voltage:	625 V
Temperature Range:	-55/+125C
Temperature Coefficient:	X7R
Dissipation Factor:	2.50% 1kHz 25C
Aging Rate:	3% Loss/Decade Hour
Insulation Resistance:	21.277 GOhms

Statements of suitability for certain applications are based on our knowledge of typical operating conditions for such applications, but are not intended to constitute - and we specifically disclaim - any warranty concerning suitability for a specific customer application or use. This Information is intended for use only by customers who have the requisite experience and capability to determine the correct products for their application. Any technical advice inferred from this Information or otherwise provided by us with reference to the use of our products is given gratis, and we assume no obligation or liability for the advice given or results obtained.

© 2006 - 2018 KEMET