PRODUCT DATASHEET
Anna series
last update 16/9/2014

DETAILS



Product Number	C11794_ANNA-40-4-M
Family	Anna
Type	Lens array
Color	clear
Diameter	40 mm
Height	10,7 mm
Style	round
Optic Material	PMMA
Holder Material	
Fastening	glue, pin
Status	production ready
ROHS Comliant	Yes
Date Updated	16/09/2014

OPTICAL PROPERTIES

LED	Viewing Angle	Light Beam	Effi-ciency	cd/lm	Connector
XP-G	25 deg	Medium	91 %	3.600	-
XP-E	19 deg	Medium	91 %	5.200	-
XB-D	22 deg	Medium	87 %	3.450	-
LUXEON Rebel	18 deg	Medium	87 %	5.000	-
LUXEON Rebel ES	27 deg	Medium	87 %	2.300	-
LUXEON A	26 deg	Medium	84 %	2.840	-
NCSxx19A	23 deg	Medium	89 %	3.200	-
NVSxx19A	25 deg	Medium	89 %	2.900	-
NF2x757A	20 deg	Medium	90 %	4.080	-
Oslon SSL 80	20 deg	Medium	88 %	4.200	-
Oslon SSL 150	22 deg	Medium	89 %	4.000	-
Duris S5 (2 chip)	25 deg	Medium	85 %	3.100	-
Z5	sim: 23	Medium	-	-	-
Double Dome (GM2BB)	sim: 24	Medium	-	-	-

Ledil Oy
Salorankatu 10
24240 SALO, Finland

http://www.ledil.com
email: ledil@ledil.com
FAX: +358-2-733 8001

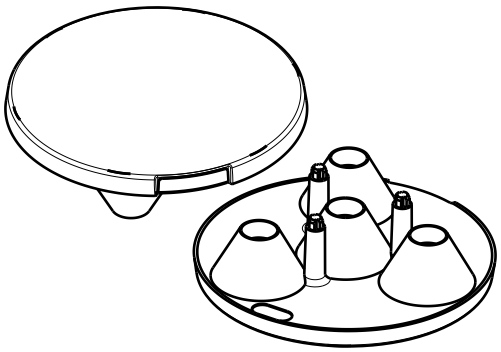

Isometric view
Scale: 1:1

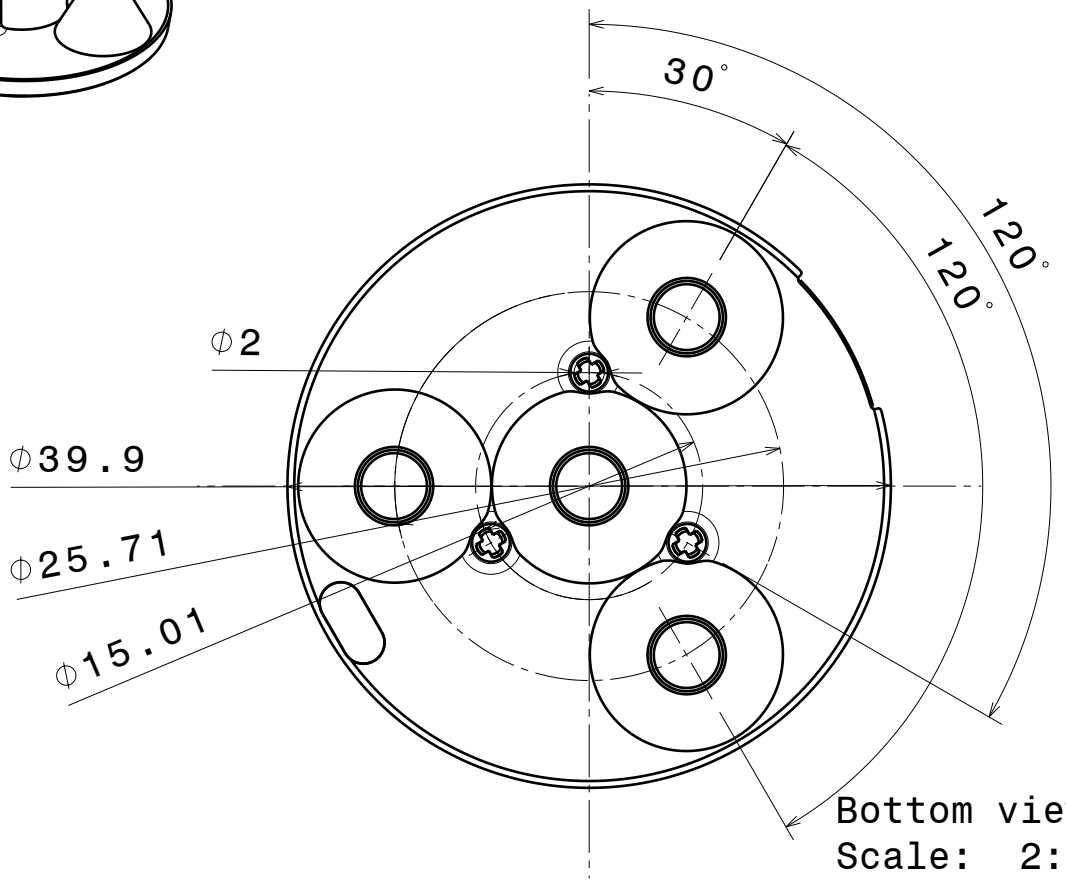

Bottom view
Scale: 2:1

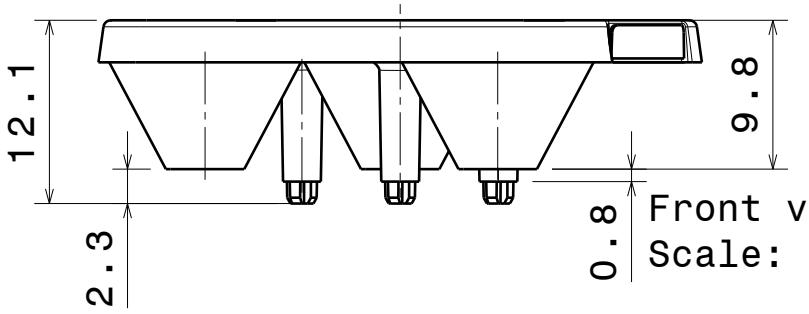

Front view
Scale: 2:1

Tolerances if not otherwise shown
According to DIN ISO 2768-1
Linear measures:
Up to 30mm class M, otherwise class C.
According to DIN ISO 2768-2
Form and position: class L

Ledil Oy
Salorankatu 10
FIN 24240 SALO
Finland

THIRD ANGLE PROJECTION:

DRAWING TITLE
C11794_ANNA-40-4-M

This drawing is the property of LEDiL Oy. It may not be reproduced, copied or communicated without a written agreement with LEDiL Oy."

SIZE	PART NUMBER
A4	C11794

SCALE	WEIGHT		SHEET
2:1	-		1/1

Luminaire: Ledil Oy C11794_Anna-40-4-M-XP-G C11794_Anna-40-4-M-XP-G
Lamps: 1 x Cree XP-G (White)

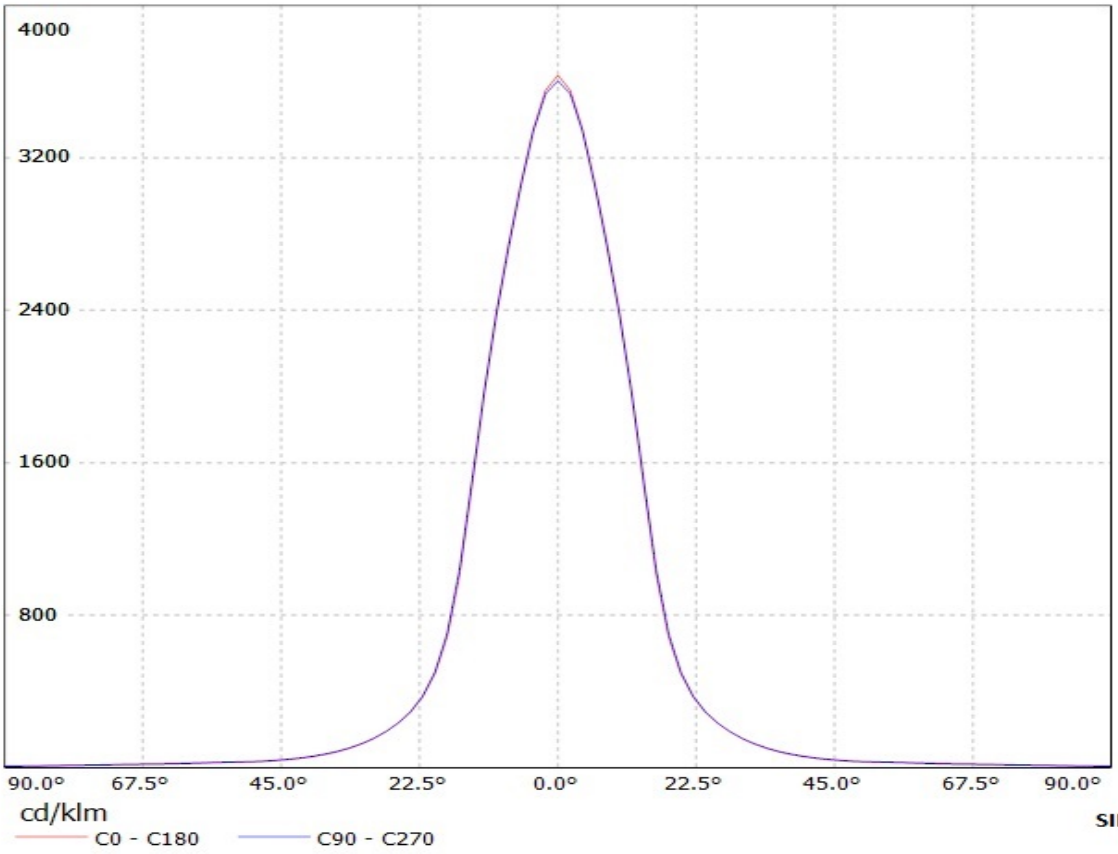

Luminaire: Ledil Oy C11794_Anna-40-4-M-XP C11794_Anna-40-4-M-XP
Lamps: 1 x Cree XP-E (white) 295lm

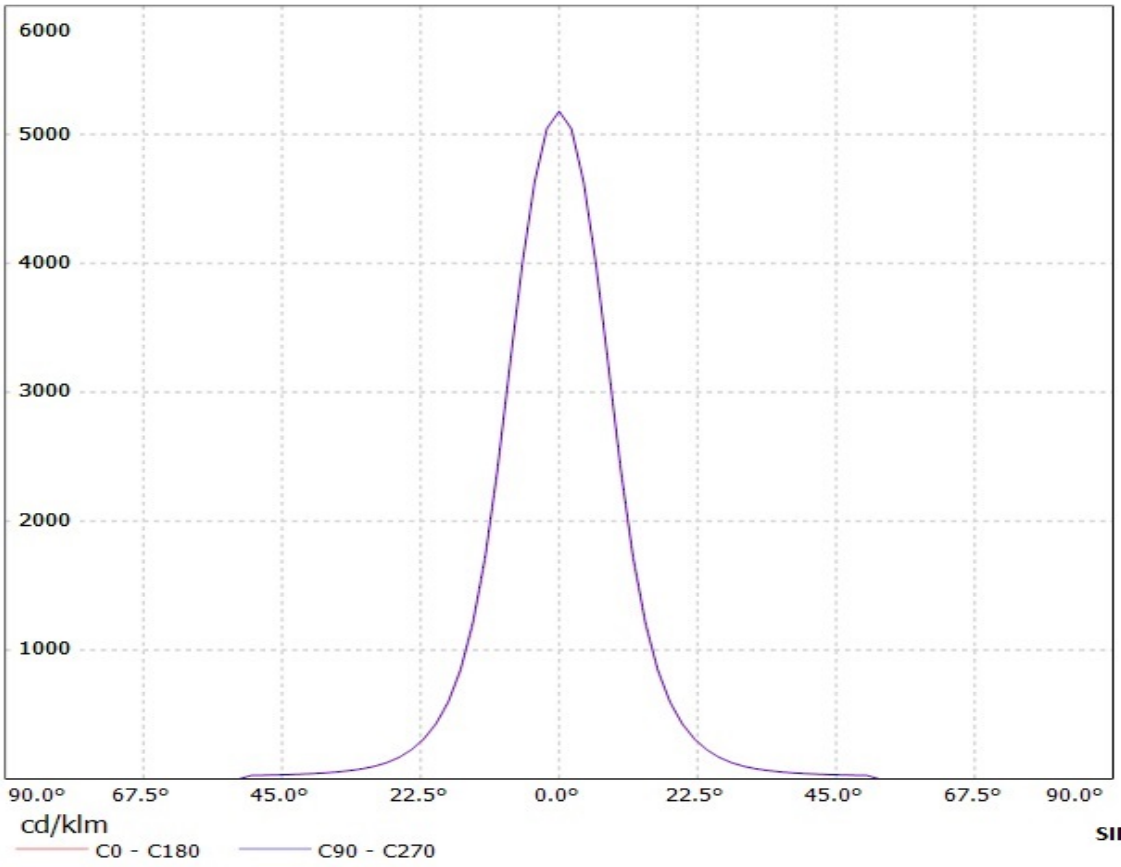

Luminaire: Ledil Oy C11793-Anna-40-4-S-RE C11793-Anna-40-4-S-RE
Lamps: 1 x Luxeon Rebel (white) 323

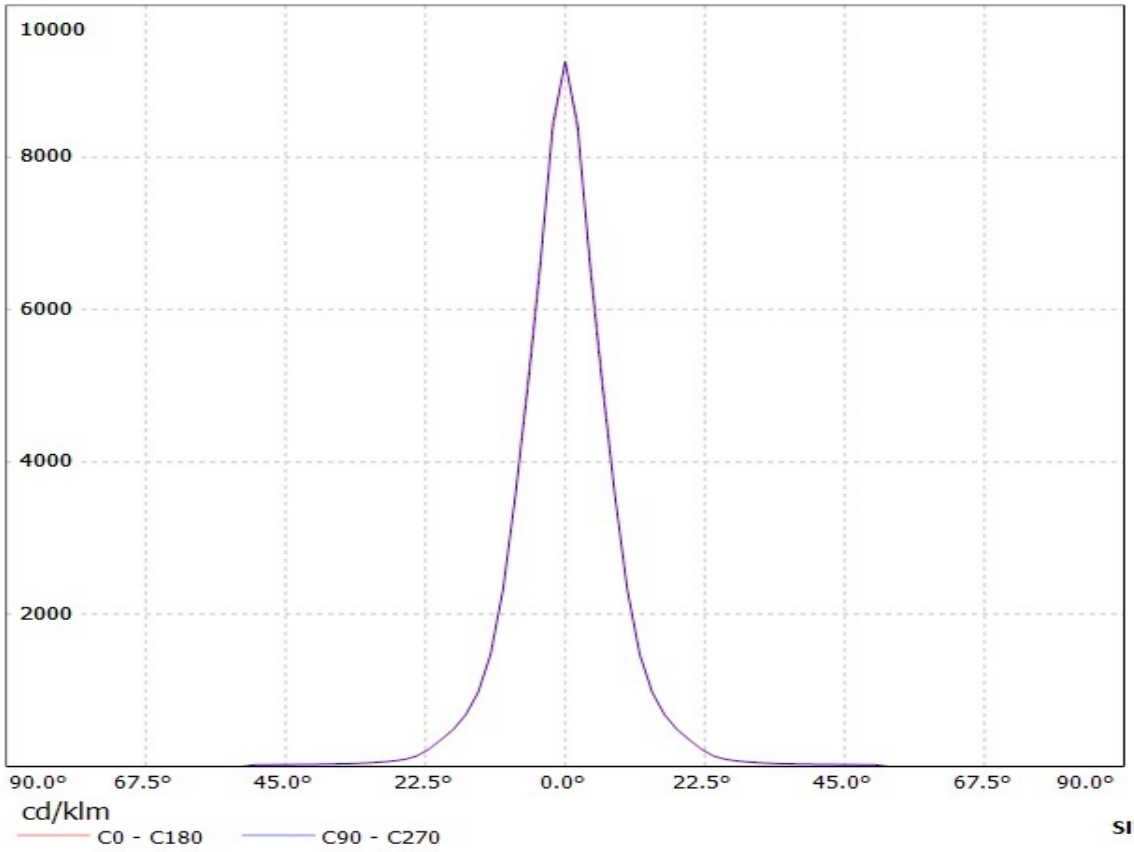

Luminaire: Ledil Oy C11793_Anna-40-4-S-OSL150 C11793_Anna-40-4-S-OSL150
Lamps: 1 x Osram SSL 150

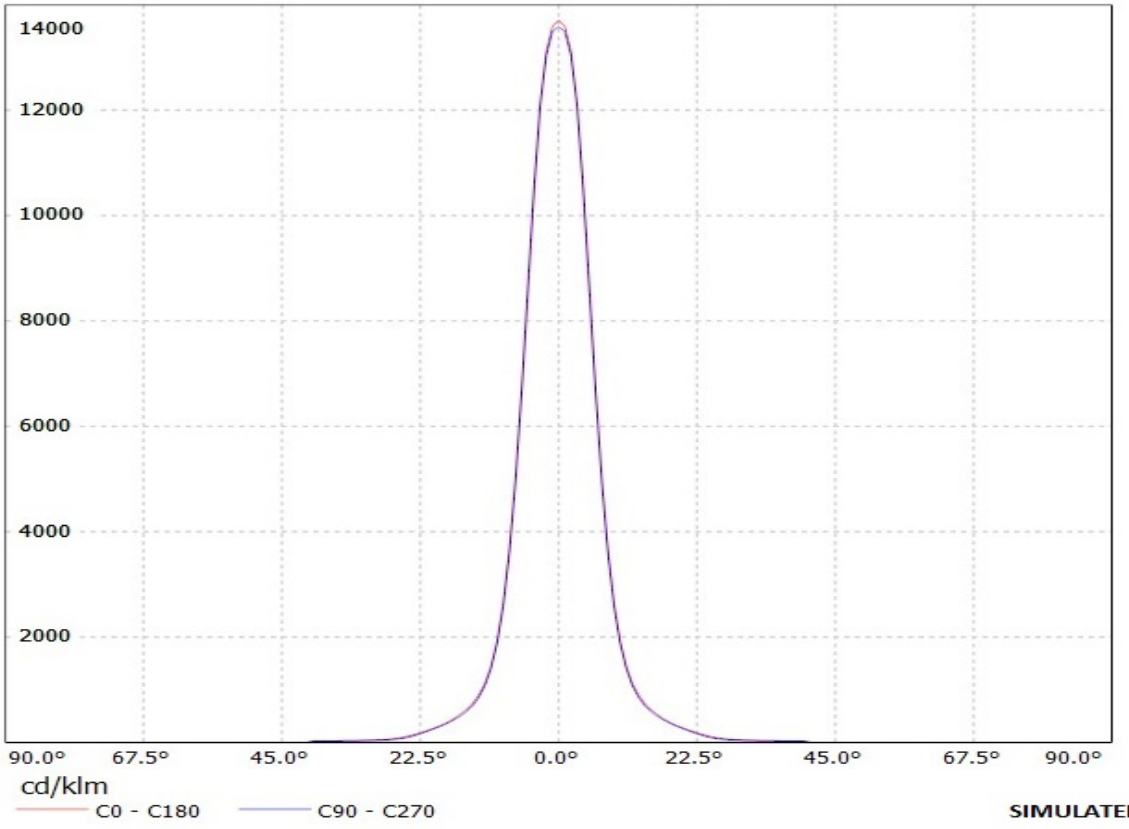

Luminaire: Ledil Oy C11793-Anna-40-4-S-RE-A Efficiency=87%
Lamps: 1 x Luxeon-A 296lm 250mA

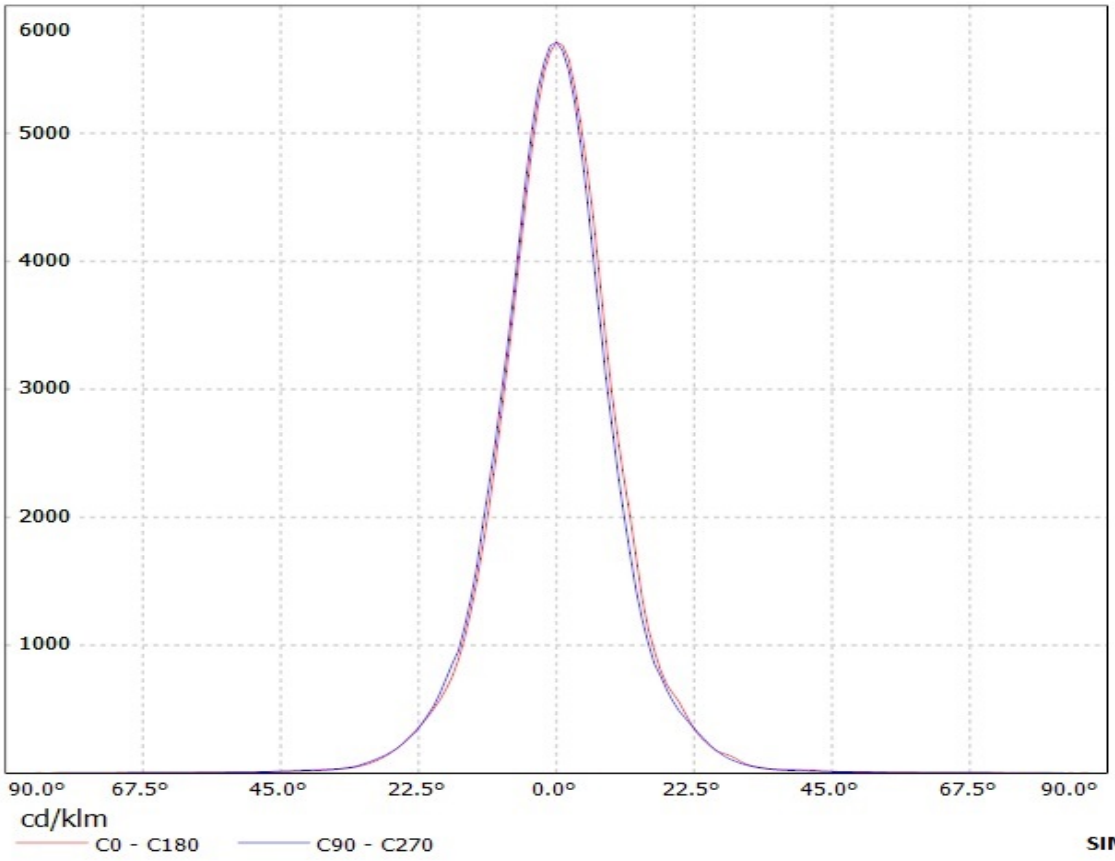

SIMULATED

Luminaire: Ledil Oy C11794_Anna-40-4-M-OSL C11794_Anna-40-4-M-OSL
Lamps: 1 x Osram SSL 80

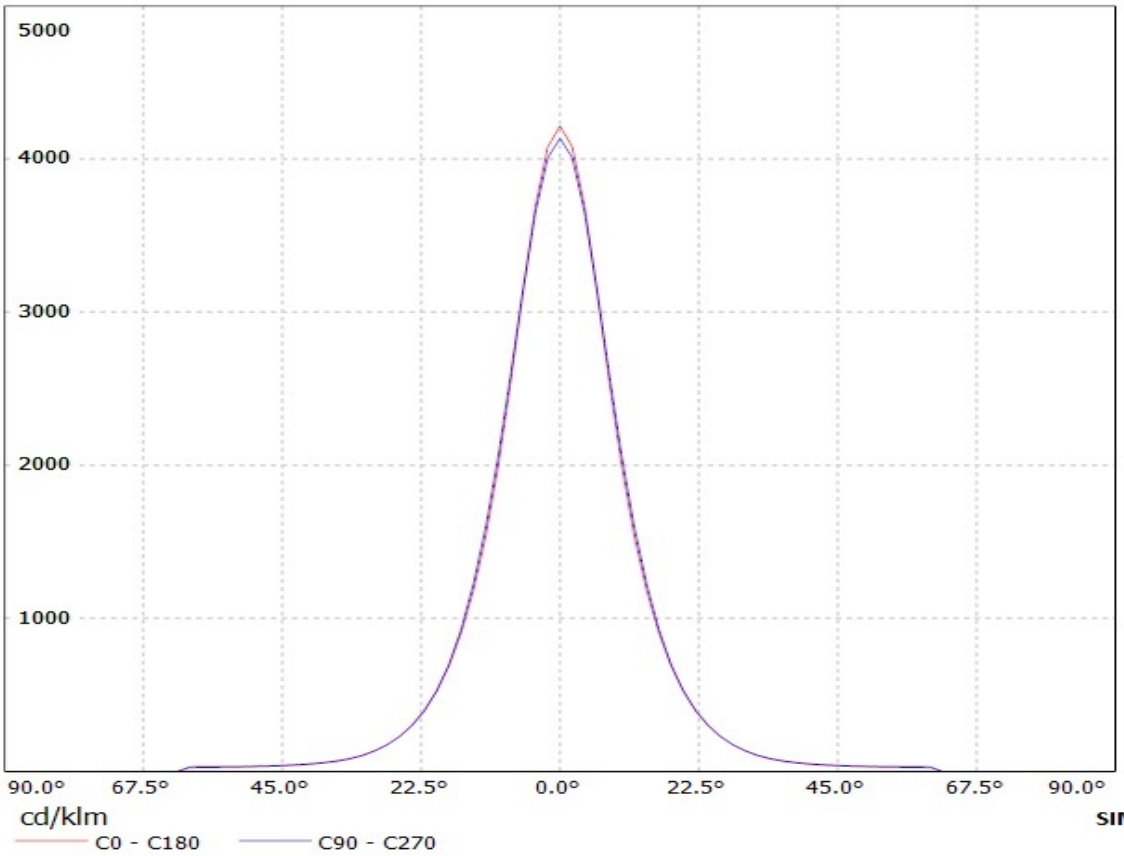

Luminaire: Ledil Oy C11793_Anna-40-4-S-OSL150 C11793_Anna-40-4-S-OSL150
Lamps: 1 x Osram SSL 150

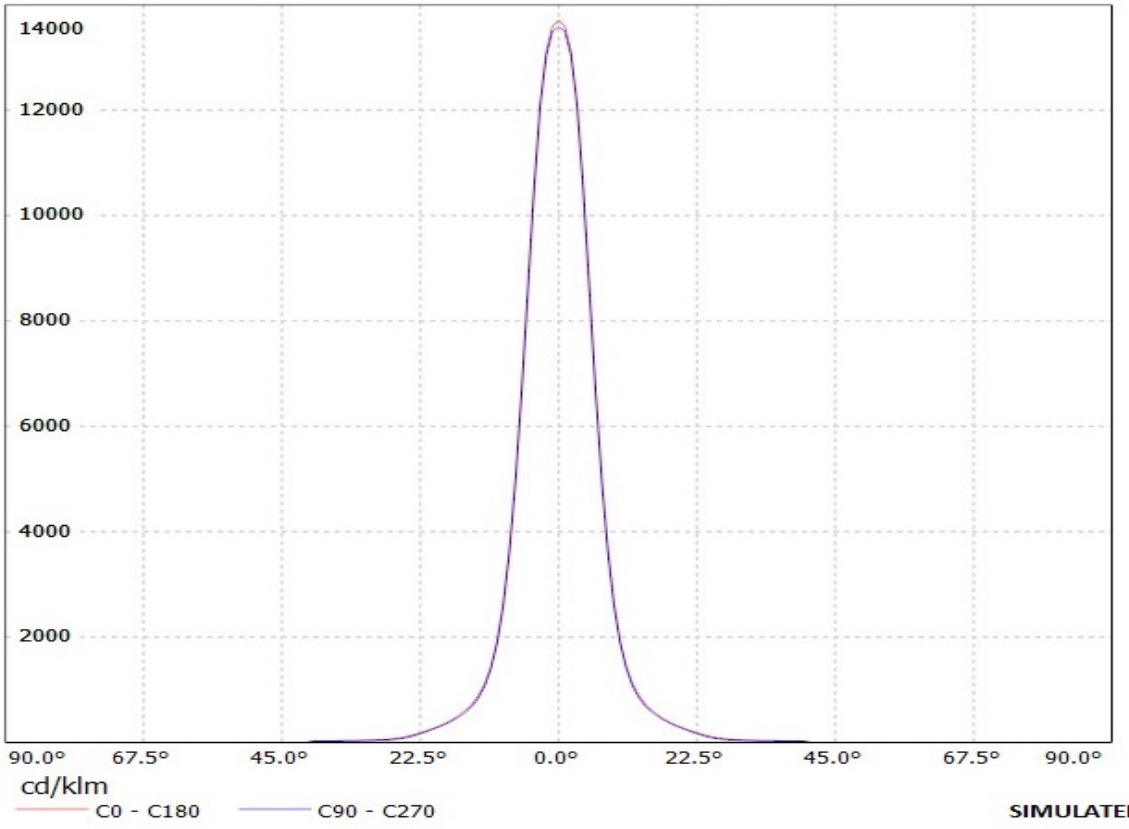

Luminaire: LEDil Oy C11794_ANNA-40-4-M_(DURIS_S5) Efficiency=85%
Lamps: 1 x Osram DURIS S% (GW PSLPS1.EC) 284lm @ 100mA CCT=6300K P=2.4W I=100mA

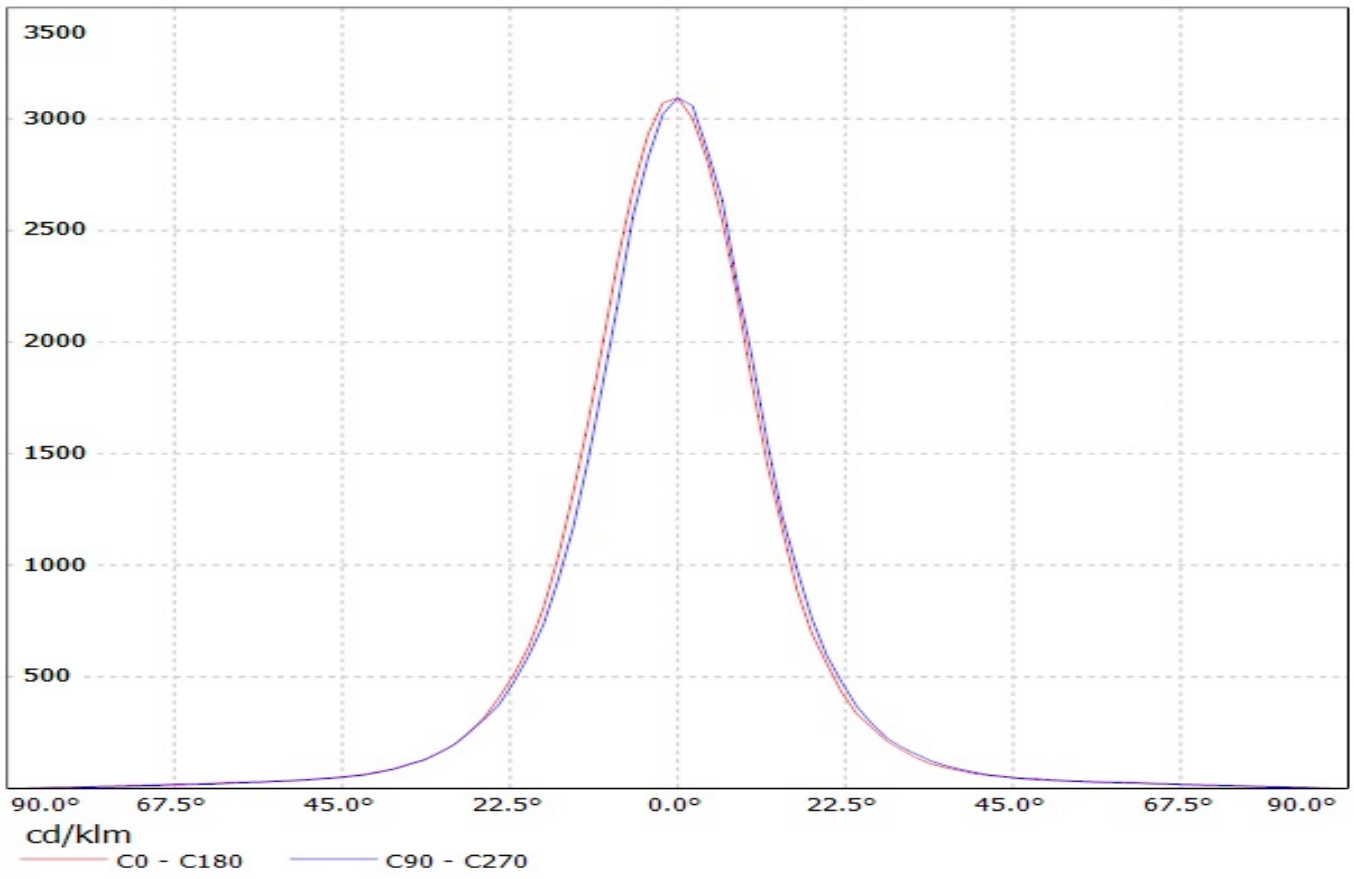

Luminaire: Ledil Oy C11794_Anna-40-4-M-XP-G C11794_Anna-40-4-M-XP-G
Lamps: 1 x Cree XP-G (White)

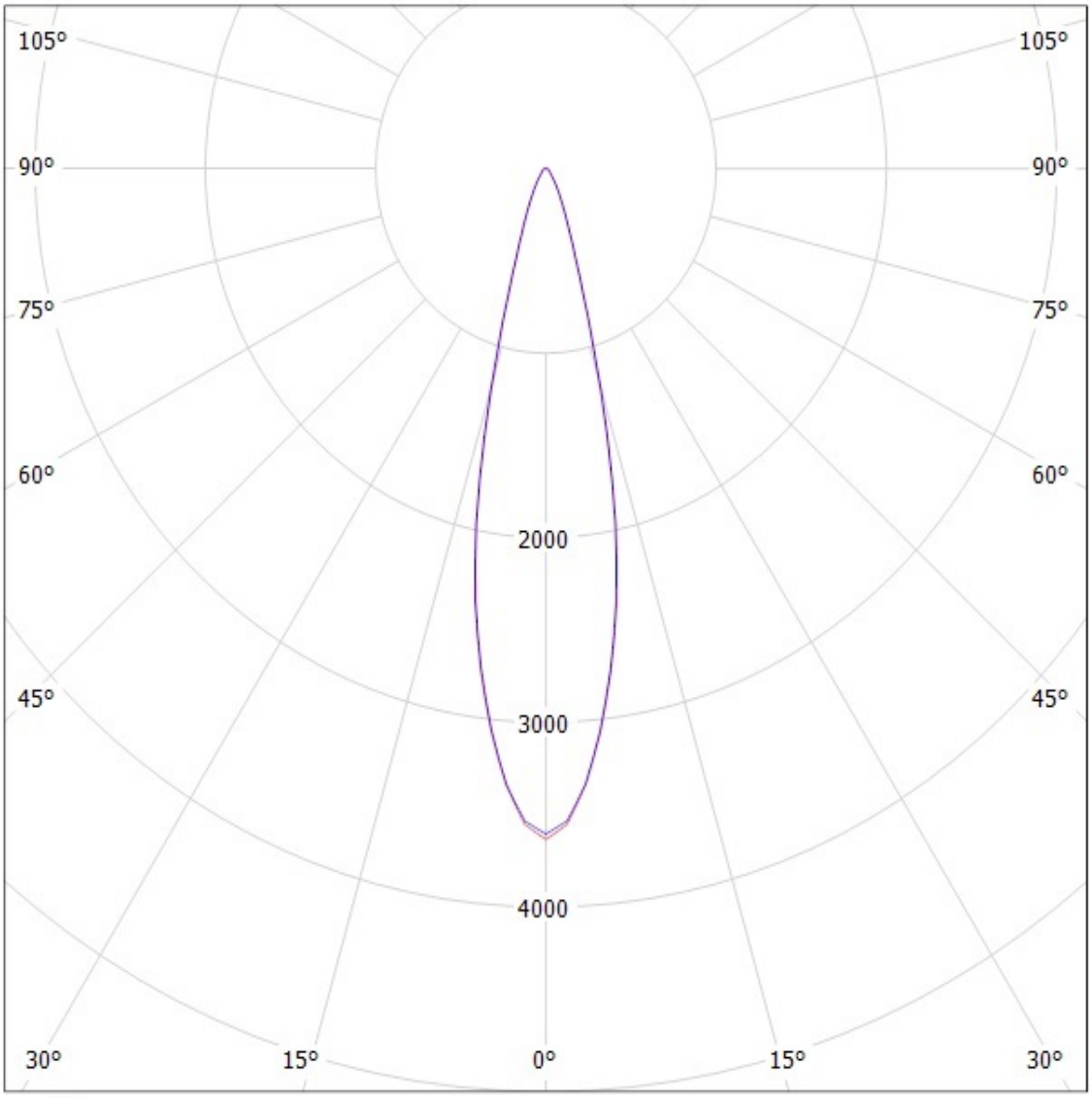

cd/klm

C0 - C180 C90 - C270

SIMULATED

Luminaire: Ledil Oy C11794_Anna-40-4-M-XP C11794_Anna-40-4-M-XP
Lamps: 1 x Cree XP-E (white) 295lm

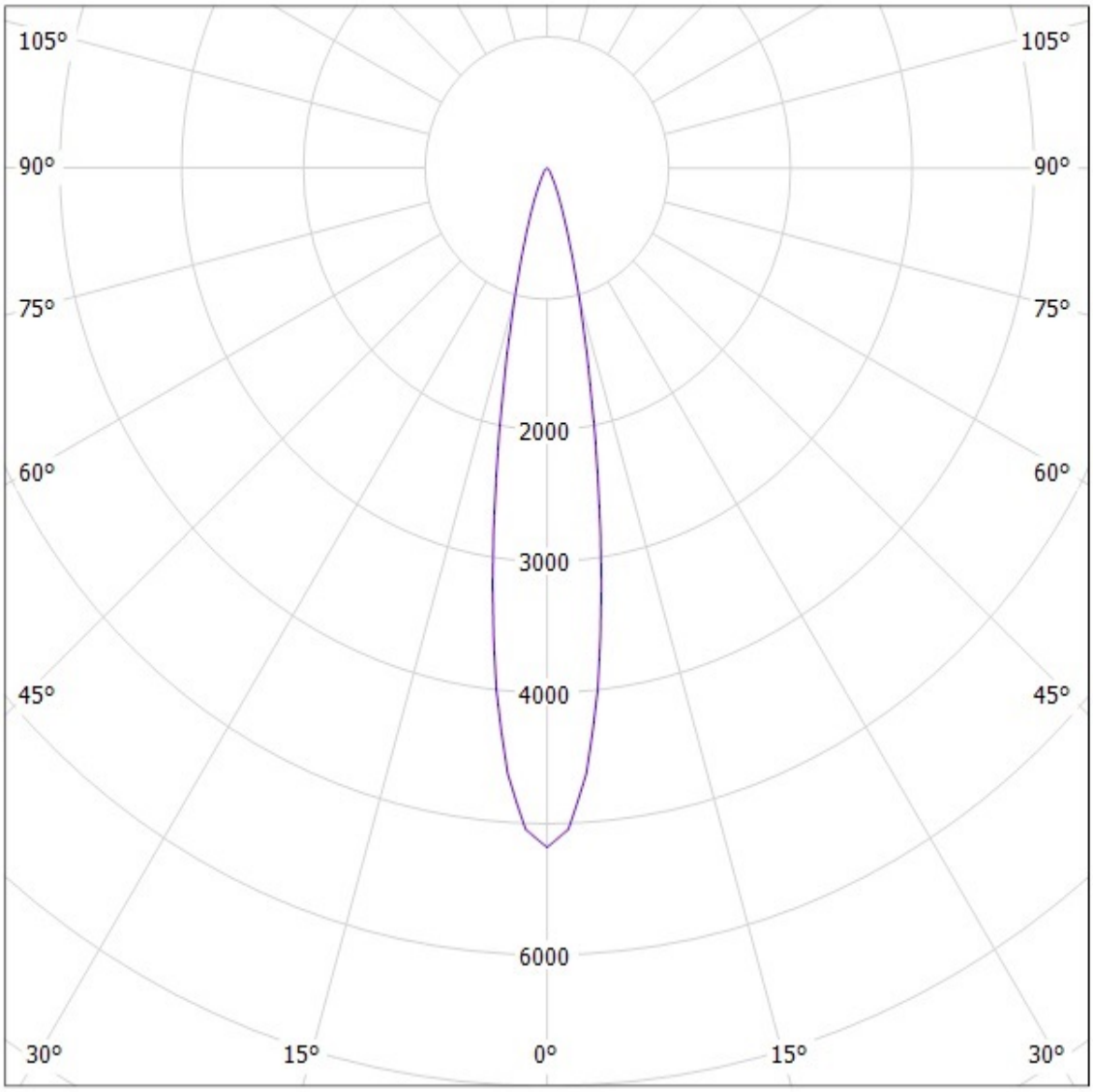

cd/klm

C0 - C180 C90 - C270

SIMULATED

Luminaire: Ledil Oy C11793-Anna-40-4-S-RE C11793-Anna-40-4-S-RE
Lamps: 1 x Luxeon Rebel (white) 323

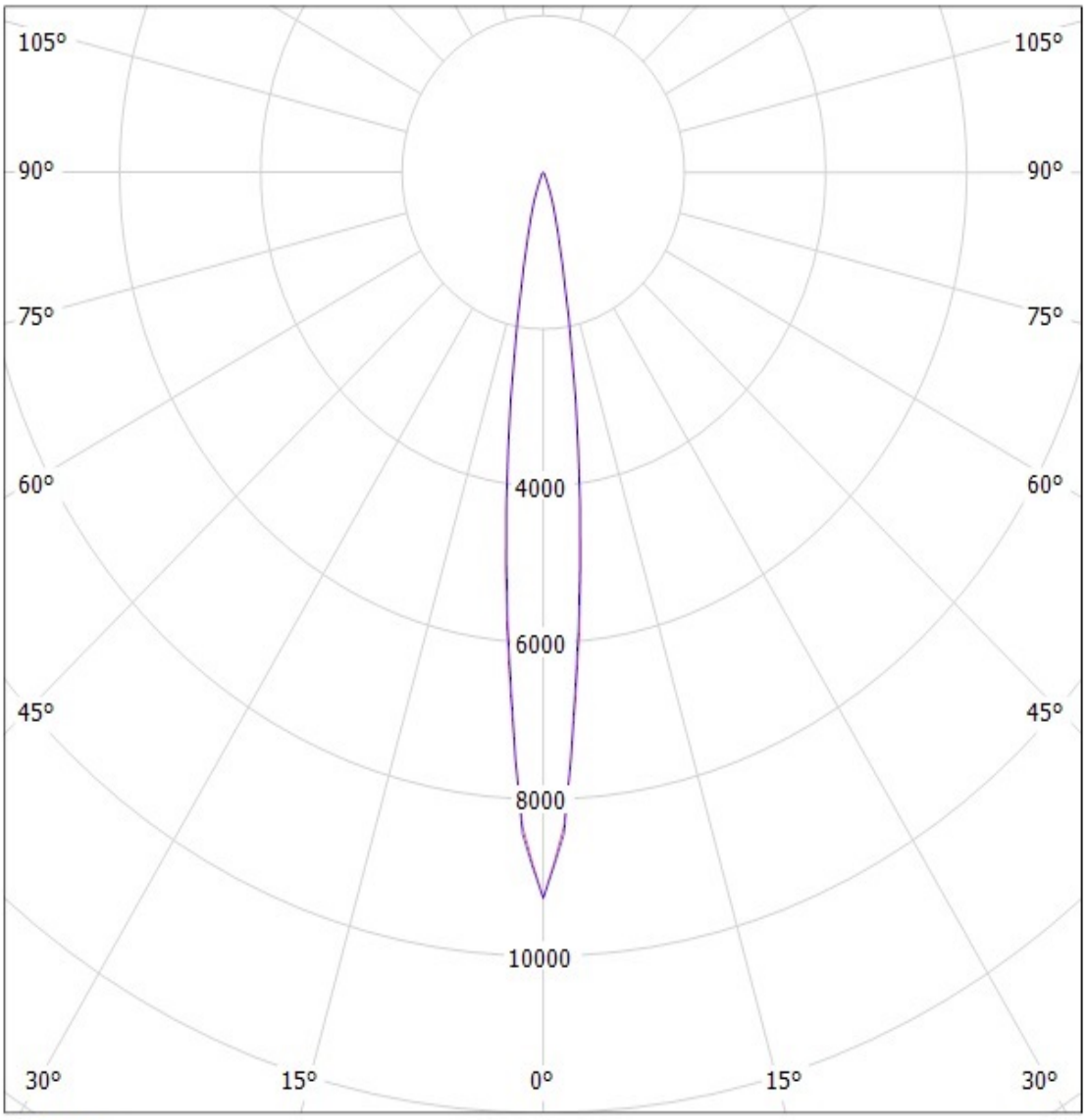

cd/klm

C0 - C180 C90 - C270

SIMULATED

Luminaire: Ledil Oy C11793_Anna-40-4-S-OSL150 C11793_Anna-40-4-S-OSL150
Lamps: 1 x Osram SSL 150

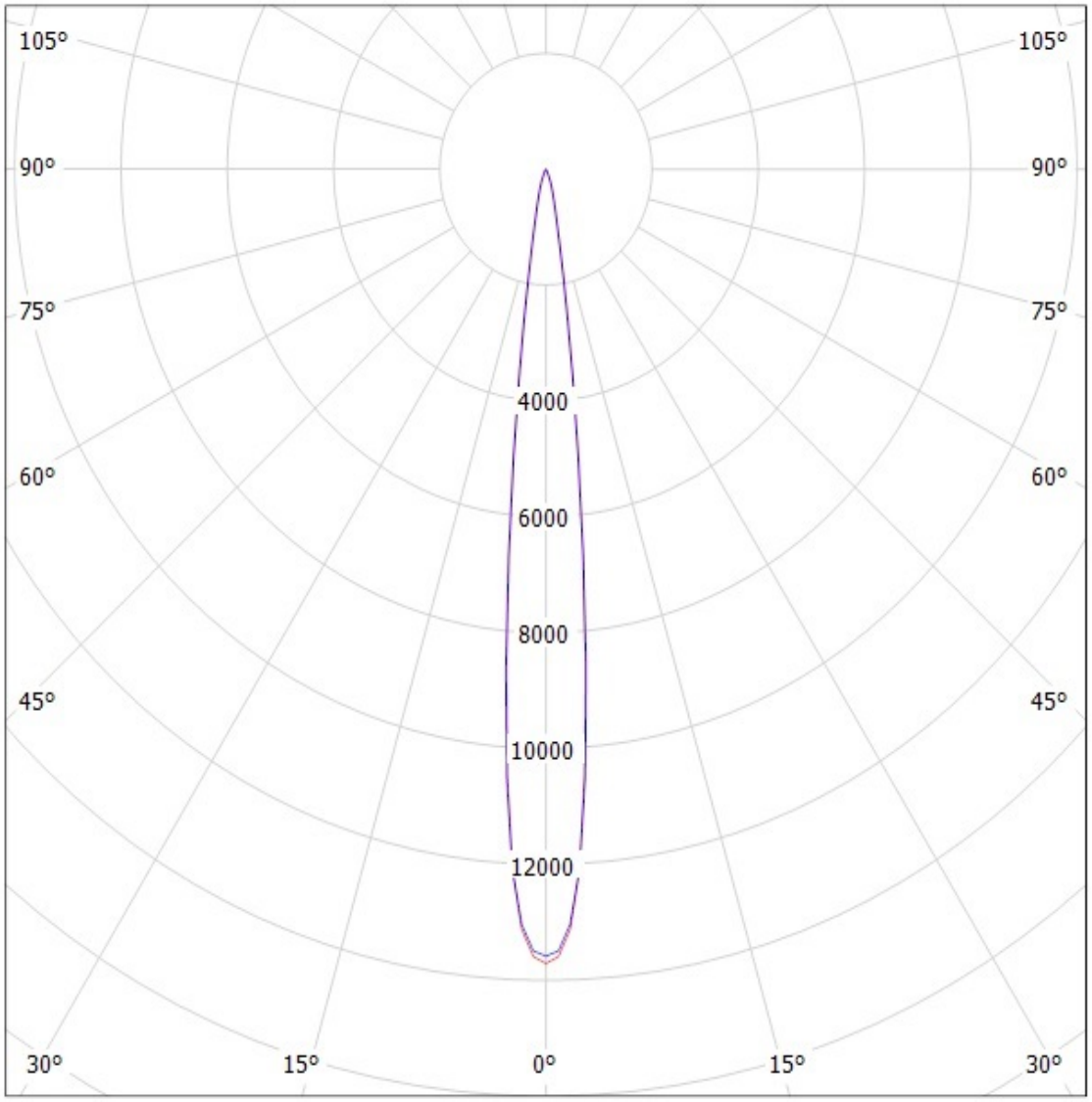

cd/klm

C0 - C180 C90 - C270

SIMULATED

Ledil Oy C11793-Anna-40-4-S-RE-A Efficiency=87% / LDC (Polar)

Luminaire: Ledil Oy C11793-Anna-40-4-S-RE-A Efficiency=87%
Lamps: 1 x Luxeon-A 296lm 250mA

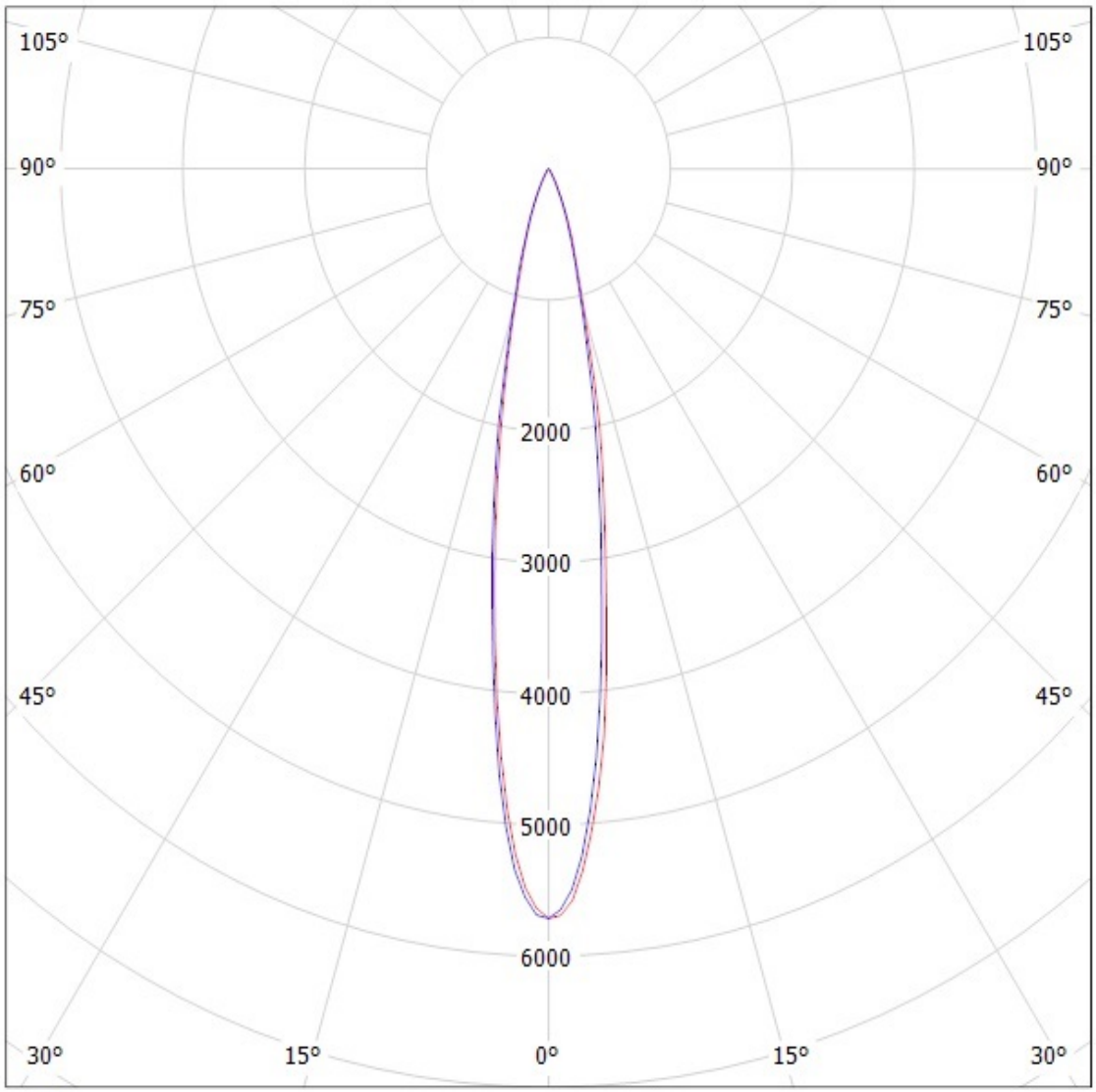

cd/klm

C0 - C180 C90 - C270

SIMULATED

Luminaire: Ledil Oy C11794_ANNA-40-4-M-757 (Nichia 757 129lm @ 100mA) LOR=90%
Lamps: 1 x Nichia 757 129lm @ 100mA

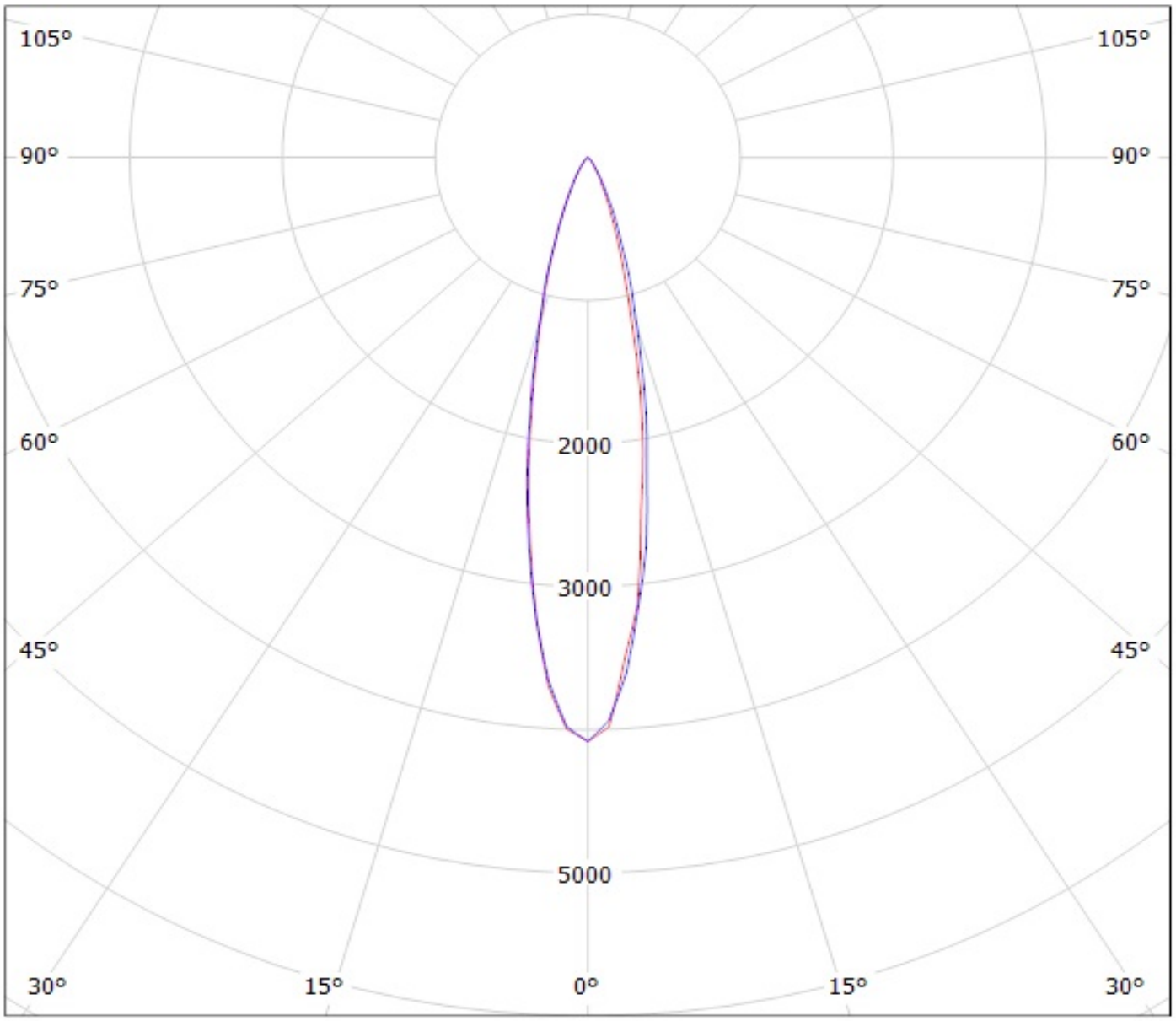

Luminaire: Ledil Oy C11794_Anna-40-4-M-OSL C11794_Anna-40-4-M-OSL
Lamps: 1 x Osram SSL 80

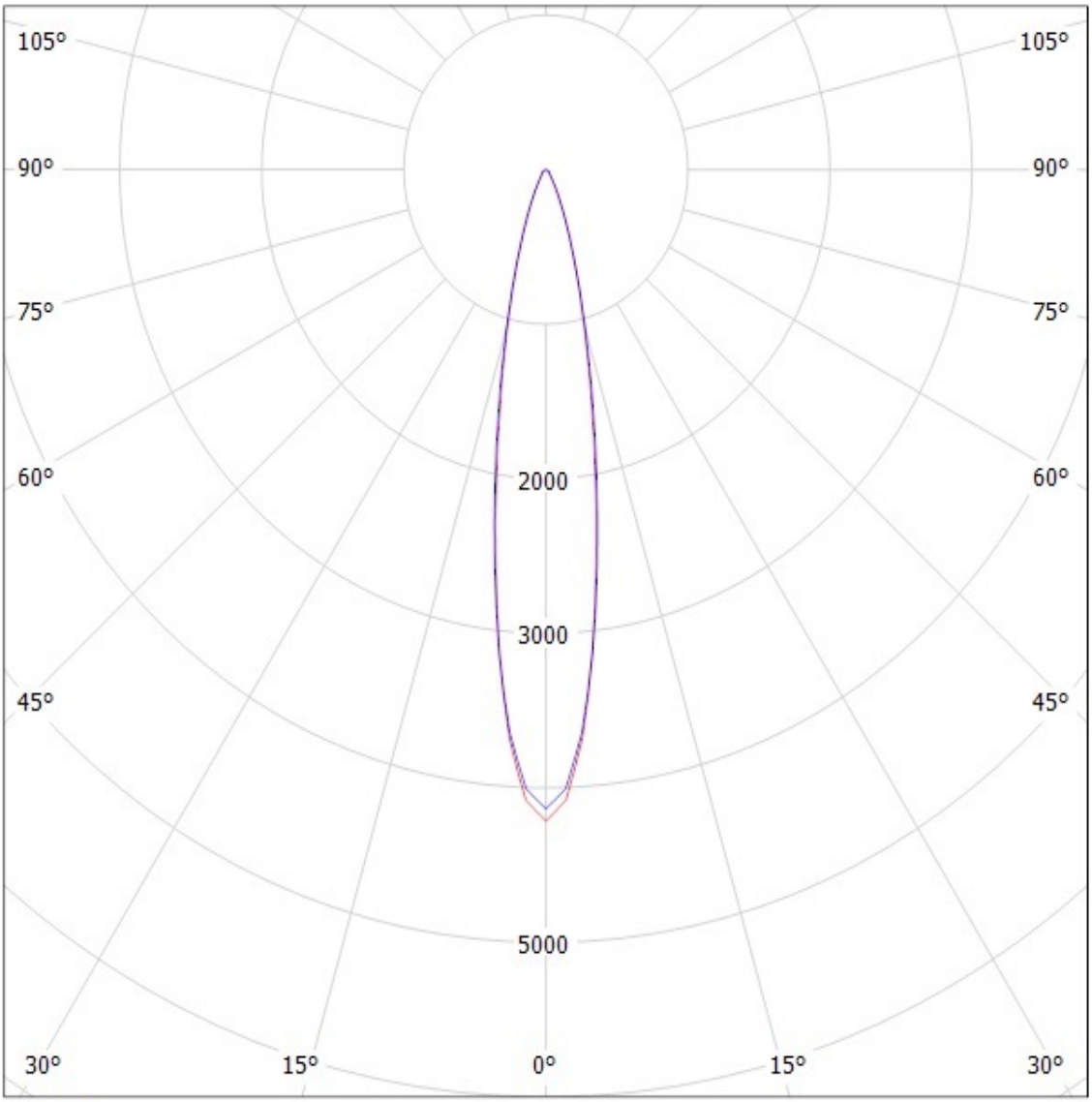

cd/klm

C0 - C180 C90 - C270

SIMULATED

Luminaire: Ledil Oy C11793_Anna-40-4-S-OSL150 C11793_Anna-40-4-S-OSL150
Lamps: 1 x Osram SSL 150

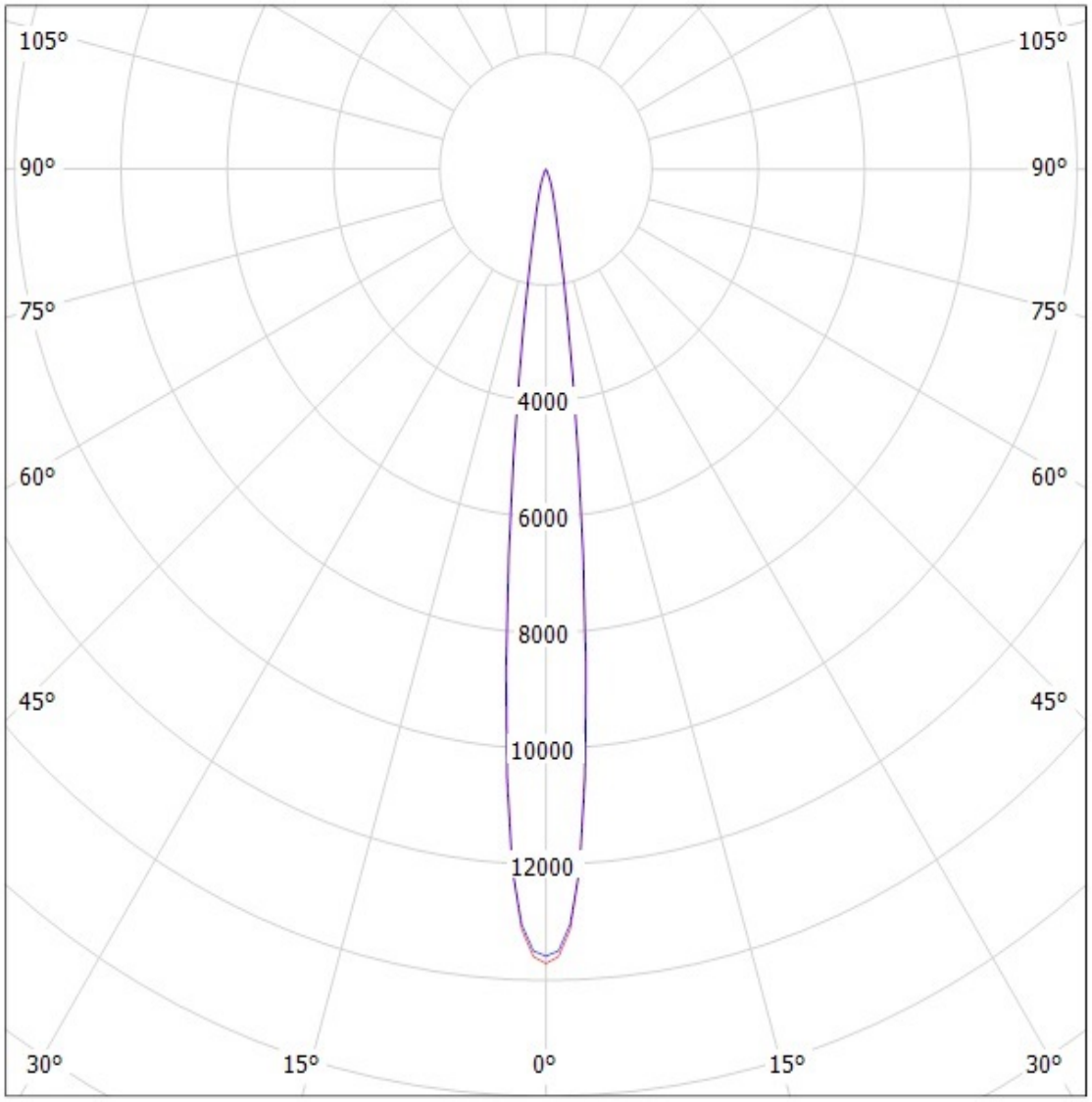

cd/klm

C0 - C180 C90 - C270

SIMULATED

Luminaire: LEDil Oy C11794_ANNA-40-4-M_(DURIS_S5) Efficiency=85%
Lamps: 1 x Osram DURIS S% (GW PSLPS1.EC) 284lm @ 100mA CCT=6300K P=2.4W I=100mA

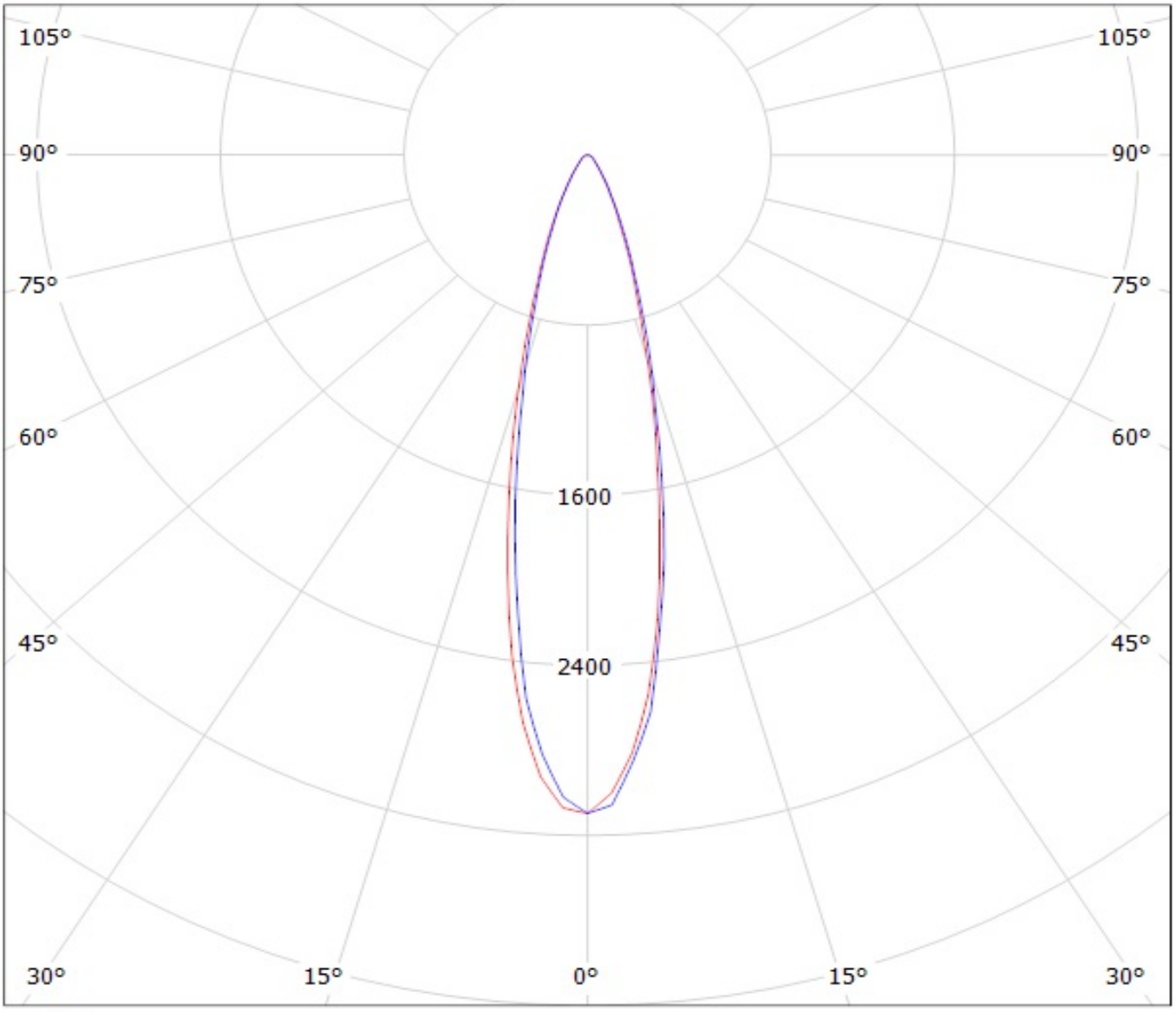

cd/klm

C0 - C180 C90 - C270

NOTE: The typical divergence will be changed by different color, chip size and chip position tolerance. The typical total divergence is the full angle measured where the luminous intensity is half of the peak value.