HAMAMATSU

HIGH PERFORMANCE THERMOELECTRIC COOLERS
C10372, C10373 SERIES

The C10372 series and C10373 series are water-cooled thermoelectric coolers designed to reduce thermal electrons emitted from the photocathode of photomultiplier tubes (PMTs) in order to improve signal-to-noise ratio (S/N ratio). The C10372 series further contains an electrostatic and magnetic shield that minimizes the influence of the ambient environment.
The C10372 series are for 28 mm, 38 mm and 51 mm diameter head-on PMTs, while the C10373 series are for MCP-PMTs.

FEATURES

- **Thermoelectric cooling using peltier module**
- **About -30 °C cooling temperature (with +20 °C cooling water)**
- **Evacuated, double-pane window with heater for frost prevention**
- **Built-in electrostatic and magnetic shielding (C10372 series)**
- **Internal protective circuit safeguards Peltier element module in case of low water**
- **Internal protection circuits prevent output short-circuit, output overvoltage, and excessive temperature rise in power supply**
- **Stable operation due to a regulated power supply**



Left: Power Supply Right: Cooled PMT Housing

SPECIFICATIONS

COOLED PMT HOUSING

Parameter		Description / Value
Cooling Method		Thermoelectric cooling using peltier module
Heat Exchange Medium		Water
Amount of Cooling Water		1 L/min to 3 L/min (water pressuere: below 0.3 MPa)
Cooling Temperature (with cooling water at +20 °C)		Approx. -30 °C
Temperature Controllable Range (with cooling water at +20 °C)		-30 °C to 0 °C (continuously adjustable)
Cooling Time		Approx. 120 min
Optical Window Material		Evacuated double-pane synthetic silica window with heater (185 nm to 2200 nm)
Applicable PMTs (sold separately)	C10372 series	28 mm (1-1/8") Dia., 38 mm (1-1/2") Dia. and 51 mm (2") Dia. Head-on
	C10373 series	MCP-PMT (R3809U-50 Series, R3809U-61/-63/-64)
Applicable Socket Assembly (sold separately)	C10372 series	E2762 Series Ⓐ
Applicable PMT Holder (sold separately)	C10373 series	E3059-500 (R3809U-50 Seriess, R3809U-61/-63/-64)
Operating Ambient Temperature / Humidity Ⓑ		+5 °C to +40 °C / Below 75 %
Storage Temperature / Humidity Ⓑ		-15 °C to +50 °C / Below 80 %
Weight		C10372 5.8 kg / C10373 5.5 kg

NOTE: ⒶSee P.2 ⒷNo condensation

POWER SUPPLY

Parameter		Description / Value
AC Input Voltage	C10372, C10373	100 V ± 10 V (50 Hz / 60 Hz)
	C10372-01, C10373-01	120 V ± 12 V (50 Hz / 60 Hz)
	C10372-02, C10373-02	240 V ± 24 V (50 Hz / 60 Hz)
Power Consumption		200 V·A
Output Voltage		24 V to 27 V
Output Current		4.2 A
Protection Circuit		Protective circuits to safeguard Peltier element module in case of low water and to prevent output short-circuit, output overvoltage, and excessive temperature rise in power supply.
Operating Ambient Temperature / Humidity Ⓑ		+5 °C to +40 °C / Below 75 %
Storage Temperature / Humidity Ⓑ		-15 °C to +50 °C / Below 80 %
Weight		2.1 kg

NOTE: ⒷNo condensation

COMPONENTS AND ACCESSORIES

●Cooled PMT housing (Including an input window) ●Power supply ●Light shield cap ●Water hose clamps (2 pcs)
●Connection cable (1.5 m) ●AC line cable (2.5 m: -02 type, 2.0 m: other types) ●Socket assembly / PMT holder mounting screw (4 pcs)

* To use these coolers, water hoses with an inner diameter of 15 mm and a water supply line with the matching round faucet are required. Prepare those hoses of the desired length. In addition, prepare a filter for removing impurities such as chlorine ions.

Subject to local technical requirements and regulations, availability of products included in this promotional material may vary. Please consult with our sales office.
Information furnished by HAMAMATSU is believed to be reliable. However, no responsibility is assumed for possible inaccuracies or omissions. Specifications are subject to change without notice. No patent rights are granted to any of the circuits described herein. ©2007 Hamamatsu Photonics K.K.

HIGH PERFORMANCE THERMOELECTRIC COOLERS C10372,C10373 SERIES

COOLING CHARACTERISTICS

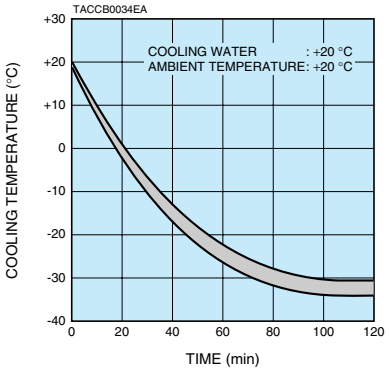

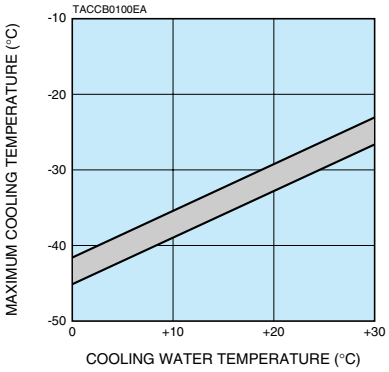

SPECTRAL TRANSMISSION CHARACTERISTICS OF OPTICAL WINDOW

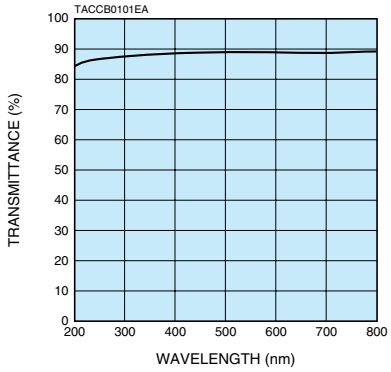

DIMENSIONAL OUTLINE (Unit: mm)

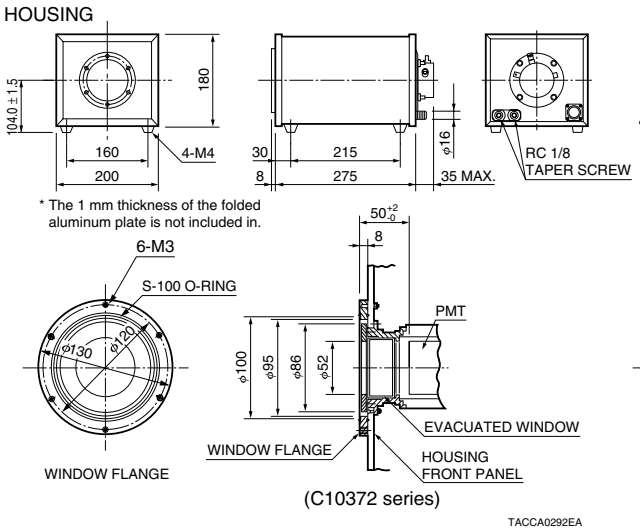

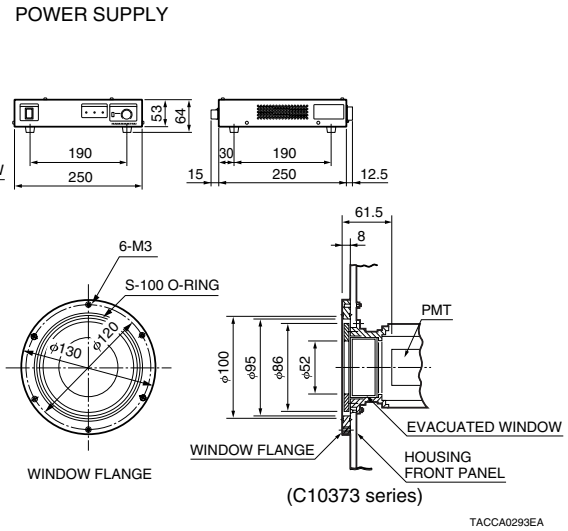

SOLD SEPARATELY (Unit: mm)

Socket Assemblies for C10372 Series E2762 Series

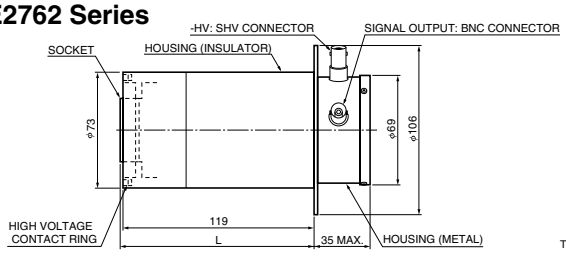

L: E2762-502...133.5 E2762-510...106.5
E2762-506...144.5 E2762-511...120.5
E2762-509...106.5 E2762-513...120.5

* The high voltage contact ring is used for internal electrical connection to the magnetic shield case in the cooler.

NOTE: Ⓐ

E2762 Series	PMT
E2762-502	R980, R1387, R2066
E2762-506	R943-02, R3310-02
E2762-509	R464, R585, R649
E2762-510	R329-02, R331-05, R2257
E2762-511	R374, R2228, R5929
E2762-513	R375, R669

MCP-PMT Holder for C10373 Series E3059-500

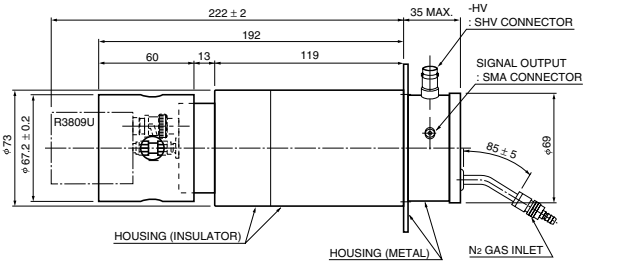

HAMAMATSU WEB SITE www.hamamatsu.com

HAMAMATSU PHOTONICS K.K., Electron Tube Division
314-5, Shimokanzo, Iwata City, Shizuoka Pref., 438-0193, Japan, Telephone: (81)539/62-5248, Fax: (81)539/62-2205

U.S.A.: Hamamatsu Corporation: 360 Foothill Road, P. O. Box 6910, Bridgewater. N.J. 08807-0910, U.S.A., Telephone: (1)908-231-0960, Fax: (1)908-231-1218 E-mail: usa@hamamatsu.com
Germany: Hamamatsu Photonics Deutschland GmbH: Arzbergerstr. 10, D-82211 Herrsching am Ammersee, Germany, Telephone: (49)8152-375-0, Fax: (49)8152-2658 E-mail: info@hamamatsu.de
France: Hamamatsu Photonics France S.A.R.L.: 19, Rue du Saule Trapu, Parc du Moulin de Massy, 91882 Massy Cedex, France, Telephone: (33)1 69 53 71 00, Fax: (33)1 69 53 71 10 E-mail: infos@hamamatsu.fr
United Kingdom: Hamamatsu Photonics UK Limited: 2 Howard Court, 10 Tewin Road Welwyn Garden City Hertfordshire AL7 1BW, United Kingdom, Telephone: 44-(0)1707-294888, Fax: 44(0)1707-325777 E-mail: info@hamamatsu.co.uk
North Europe: Hamamatsu Photonics Norden AB: Smidesvägen 12, SE-171-41 SOLNA, Sweden, Telephone: (46)8-509-031-00, Fax: (46)8-509-031-01 E-mail: info@hamamatsu.se
Italy: Hamamatsu Photonics Italia: S.R.L.: Strada della Moia, 1/E, 20020 Arese, (Milano), Italy, Telephone: (39)02-935 81 733, Fax: (39)02-935 81 741 E-mail: info@hamamatsu.it

TACC1040E02
SEPT. 2007 IP