KEMET Part Number: C0805S103M5RACAUTO

SMD Auto X7R FE, Ceramic, Floating Electrode, 0.01 uF, 20%, 50 VDC, X7R, SMD, MLCC, FE-CAP, Floating Electrode, Automotive Grade, 0805

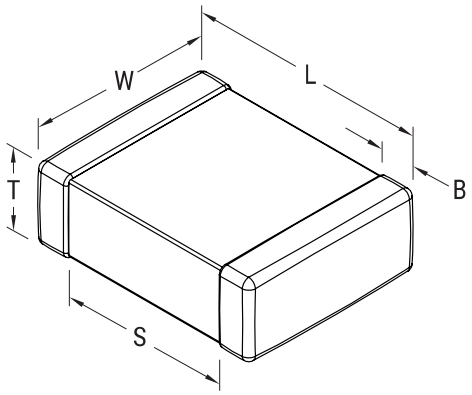

General Information	
Supplier:	KEMET
Series:	SMD Auto X7R FE
Style:	SMD Chip
Description:	SMD, MLCC, FE-CAP, Floating Electrode, Automotive Grade
Features:	FE-CAP, Floating Electrode, Automotive Grade
RoHS:	Yes
Termination:	Tin
Marking:	No
Qualifications:	AEC-Q200
AEC-Q200:	Yes
Miscellaneous:	Note: Referee time for X7R dielectric for this part number is 1000 hours
Chip Size:	0805

Dimensions	
L	2mm +/-0.2mm
W	1.25mm +/-0.2mm
T	0.78mm +/-0.10mm
S	0.75mm MIN
B	0.5mm +/-0.25mm

Specifications	
Capacitance:	0.01 uF
Capacitance Tolerance:	20%
Voltage DC:	50 VDC
Dielectric Withstanding Voltage:	125 V
Temperature Range:	-55/+125C
Temperature Coefficient:	X7R
Dissipation Factor:	2.50% 1kHz 25C
Aging Rate:	3% Loss/Decade Hour
Insulation Resistance:	100 GOhms

Packaging Specifications	
Packaging:	T&R, 180mm, Paper Tape
Packaging Quantity:	4000

Statements of suitability for certain applications are based on our knowledge of typical operating conditions for such applications, but are not intended to constitute - and we specifically disclaim - any warranty concerning suitability for a specific customer application or use. This Information is intended for use only by customers who have the requisite experience and capability to determine the correct products for their application. Any technical advice inferred from this Information or otherwise provided by us with reference to the use of our products is given gratis, and we assume no obligation or liability for the advice given or results obtained.

© 2006 - 2018 IntelliData.net