C0603C0G1E020C030BA

TDK Item Description : C0603C0G1E020CT****

Lead Free | Halogen Free | REACH | RoHS COMPLIANT

Application & Main Feature

Commercial Grade (General (Up to 50V))

Series

C0603 [EIA CC0201]

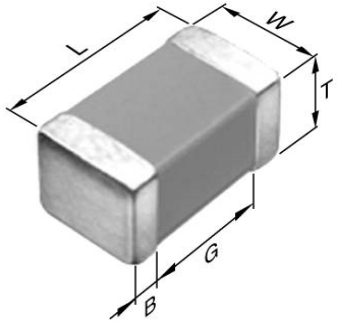

Dimensions

L	0.60mm +/-0.03mm
W	0.30mm +/-0.03mm
T	0.30mm +/-0.03mm
B	0.10mm Min.
G	0.20mm Min.

Temperature Characteristic

C0G (-55 to 125 degC 0+/-30ppm/degC)

Rated Voltage

1E (25Vdc)

Capacitance

2pF

Capacitance Tolerance

C (+/-0.25pF)

Q Factor

440 Min.

Insulation Resistance

10Gohm Min.

AEC-Q200

Not Applicable

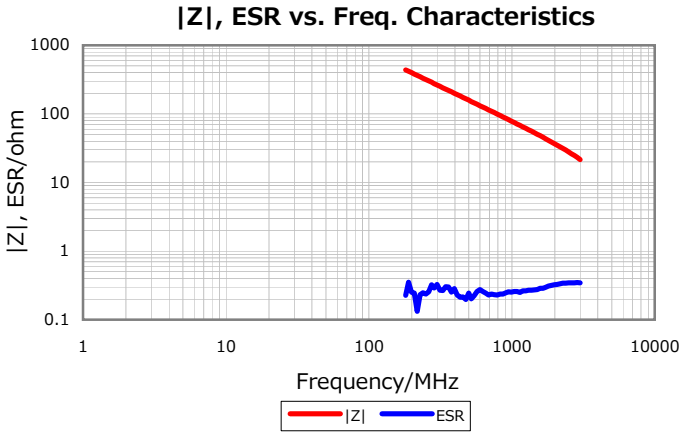

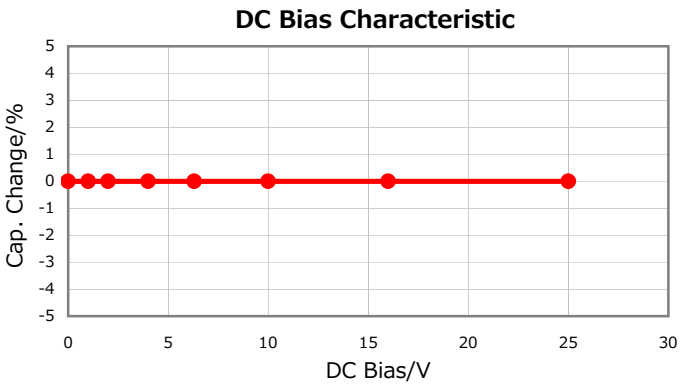

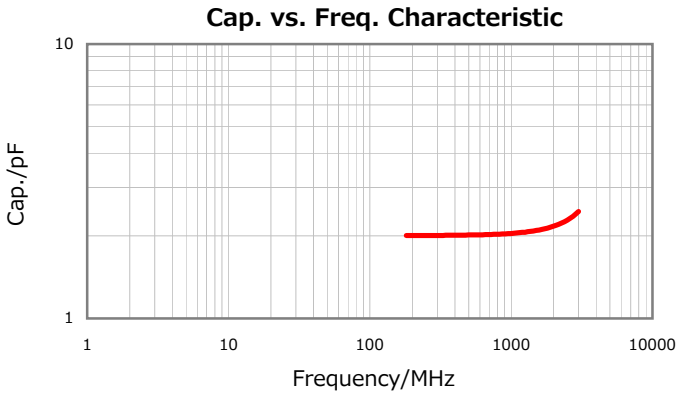

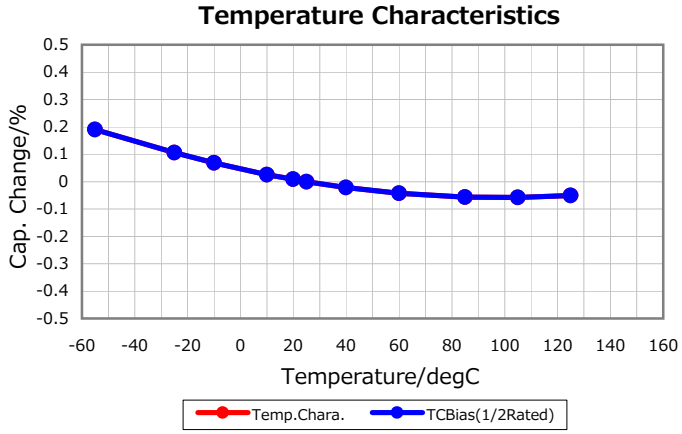

Characterization Sheet (Multilayer Ceramic Chip Capacitors)

All specifications are subject to change without notice.