NOTES:

1. MATERIALS AND FINISHES(PLATING THICKNESS IN MICRO-INCHES):
   BODY - PHOSPHOR BRONZE, NICKEL PLATING
   CONTACT - BRASS, GOLD PLATING
   INSULATOR - PTFE
2. ELECTRICAL:
   A. IMPEDANCE: 75 OHM
   B. FREQUENCY RANGE: DC 0-4 GHz
   C. VSWR(RETURN LOSS): 1.3 MAX.
   D. DIELECTRIC WITHSTANDING VOLTAGE: 1000 VRMS, MIN.
3. MECHANICAL:
   A. DURABILITY: 500 CYCLES MIN.
   B. TEMPERATURE RANGE: - 40°C to +155°C
4. CRIMPED FERRULE
   HEX CRIMP SIZE .178"

031-70335	REVISIONS				
PART NO.	REV	DESCRIPTION	DATE	ECO	APPR
THIRD ANGLE PROJ.	A	RELEASE TO MFG.	27-Jul-06	8/10/06	CISSY

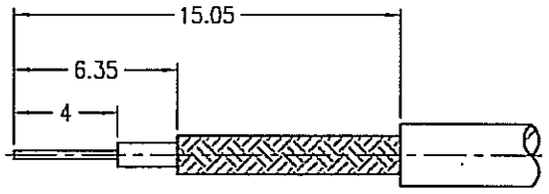

RECOMMENDED
CABLE STRIPPING DIM'S

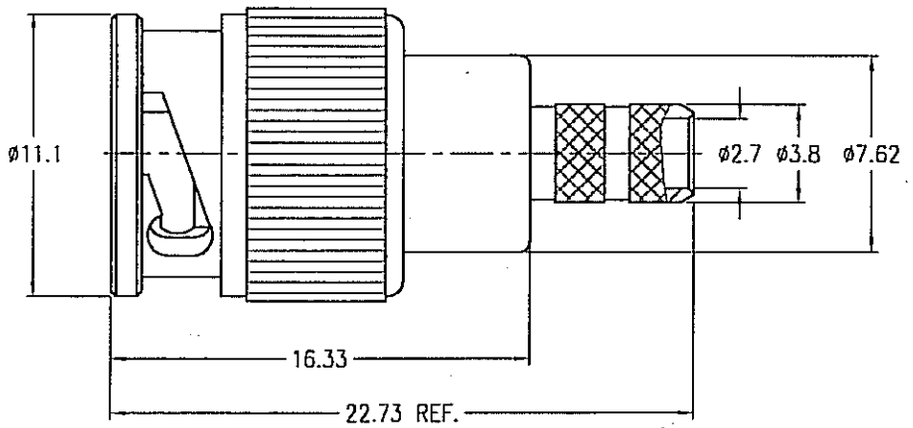

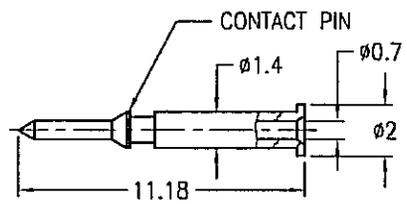

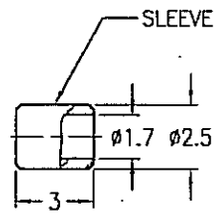

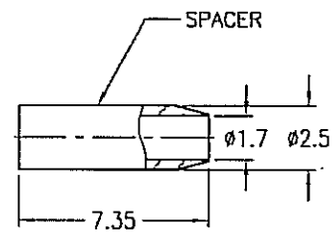

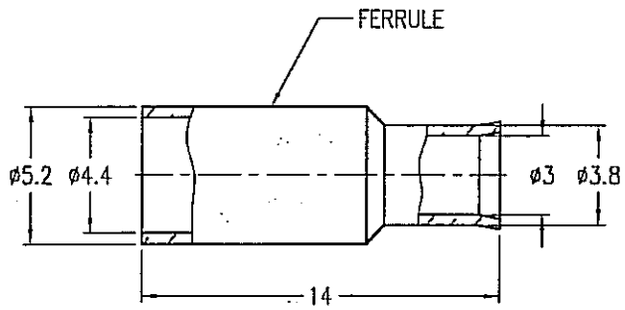

CUSTOMER OUTLINE DRAWING

ALL OTHER SHEETS ARE FOR INTERNAL USE ONLY

UNLESS OTHERWISE SPECIFIED, DIMENSIONS ARE IN METRIC AND TOLERANCES ARE:			
0.5 - 6mm	6 - 30mm	30 - 120mm	ANGLES
±0.1mm	±0.2mm	± 0.3mm	±1°

NOTICE - These drawings, specifications, or other data (1) are, and remain the property of Amphenol Corp. (2) must be returned upon request; and (3) are confidential and not to be disclosed to any person other than those to whom they are given by Amphenol Corp. The furnishing of these drawings, specifications, or other data by Amphenol Corp., or to any other person to anyone for any purpose is not to be regarded by implication or otherwise in any manner licensing, granting rights or permitting such holder or any other person to manufacture, use or sell any product, process or design, patented or otherwise, that may in any way be related to or disclosed by said drawings, specifications, or other data.

MATERIAL

REFERENCE

FINISH

DRAWN CISSY DATE 27-Jul-06

ENGINEER DATE 27-Jul-06

APPROVED DATE 8/1/06

CAD FILE F:\DWG\MNB\1121E1\001\NT30G\75SZ

TITLE MINI BNC CRIMP PLUG (FOR RG-316/U, 174/U, 188A/U CABLE)

SCALE: 3/1	SHEET 1 OF 1	
DWG SIZE	CODE ID	REV
B	74868	A

Amphenol RF
Danbury CT USA, Tainan Taiwan, Shenzhen China
www.amphenolrf.com

DRAWING NO.	MNB1121E1-001-NT30G-75
ITEM NO.	311121AABA1NC7F
PART NO.	031-70335