THIS DRAWING IS UNPUBLISHED RELEASED FOR PUBLICATION 2015
© COPYRIGHT 2015 BY TE CONNECTIVITY ALL RIGHTS RESERVED.

LOC	DIST

REVISIONS

P	LTR	DESCRIPTION	DATE	DWN	APVD
	1	NEW DEVELOPMENTAL RELEASE	12JAN2015	JA	DM
	2	REVISED PER ECO-15-004372	19MAR2015	JA	DM
	A	PRODUCTION RELEASE PER ECO-15-014220	01OCT2015	JA	DM
	A1	REVISED PER PCN :E-18-011823	23JUL2018	DD	DM

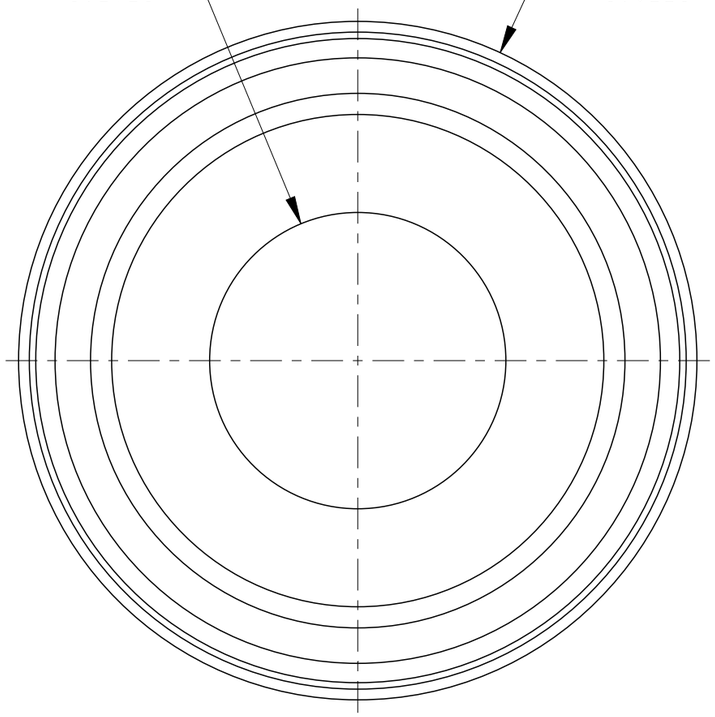

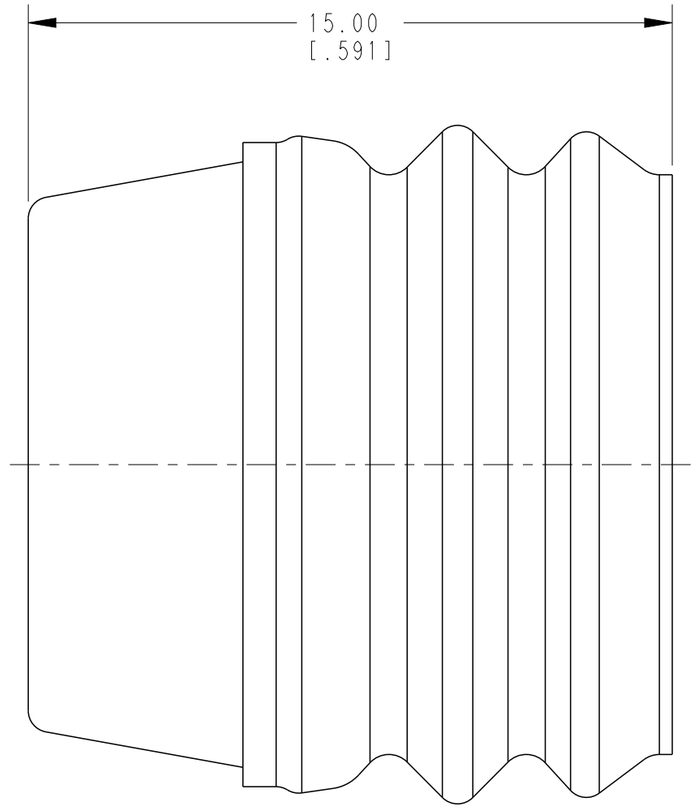

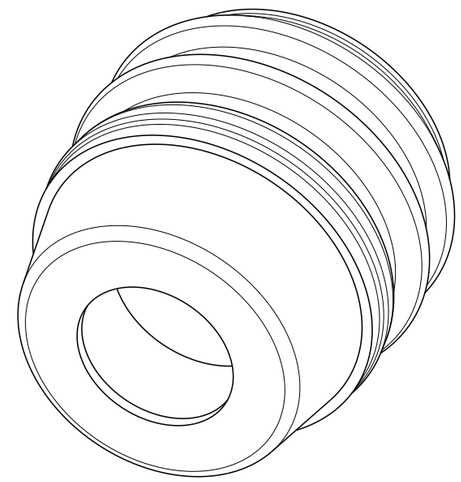

SCALE 4:1

TE INTERNAL PN	DEUTSCH PN	WIRE SEALING RANGE
2289241-1	WS-25-001	8.17-9.66 [.322-.380]

2 MATERIAL: SILICONE (VMQ), COLOR: BLUE.

1. PART IS USED ON RECEPTACLE DTSK04-1-08PX AND PLUG DTSK06-1-08SX. (X = A,B,C KEYS)

NOTES: UNLESS OTHERWISE SPECIFIED

THIS DRAWING IS A CONTROLLED DOCUMENT.

DIMENSIONS: mm[INCHES]

TOLERANCES UNLESS OTHERWISE SPECIFIED:
0 PLC ±
1 PLC ±
2 PLC ±0.64 [.025]
3 PLC ±
4 PLC ±
ANGLES ±0°30'0"

MATERIAL 2

FINISH

DWN JAIME C. APOSTOL 12JAN2015
CHK DENNIS WHITACRE 12JAN2015
APVD DAVID MEYER 12JAN2015
PRODUCT SPEC 108-151027
APPLICATION SPEC 114-151028
WEIGHT 1.88g

TE Connectivity

NAME WIRE SEAL, 25mm²
SEAL RANGE - 8.17mm-9.66mm
∅8mm CONTACT

SIZE	CAGE CODE	DRAWING NO	RESTRICTED TO
A3	4AFU8	C-WS-25-001	-

CUSTOMER DRAWING

SCALE 7:1 SHEET 1 OF 1 REV A1

1470-19 (3/11)