This document was generated on 04/12/2010

PLEASE CHECK WWW.MOLEX.COM FOR LATEST PART INFORMATION

Part Number: 0190020044

Status: Active

Description: Avikrimp™Quick Disconnect, Female, for 10-12 (5.00-3.30) Wire, Box, Tab 6.35mm (.250") x 0.81mm (.032")

Documents:

Drawing (PDF) | RoHS Certificate of Compliance (PDF)

Agency Certification

CSA	LR18689
UL	E79133

General

Product Family	Quick Disconnects
Series	19002
Crimp Quality Equipment	Yes
Product Name	Avikrimp™
Type	Quick Disconnect

Physical

Barrel Type	Closed
Flammability	94V-2
Gender	Female
Glow-Wire Compliant	No
Insulation	Nylon (PA)
Lock to Mating Part	None
Material - Metal	Brass
Orientation	Straight
Packaging Type	Bag
Polarized to Mating Part	No
Tab Thickness	0.81mm (.032")
Tab Width	6.35mm (.250")
Temperature Range - Operating	-65°C to +105°C
Wire Insulation Diameter	6.22mm (.245") max.
Wire Size AWG	10, 12
Wire Size mm²	3.30 - 5.00

Electrical

Voltage - Maximum	300V

Material Info

Old Part Number	C-5265

Reference - Drawing Numbers

Sales Drawing	SD-19002-005

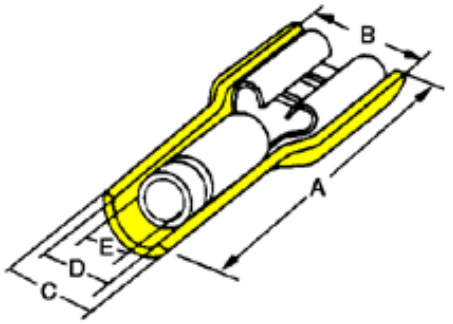

Series

image - Reference only

EU RoHS
ELV and RoHS Compliant
REACH SVHC
Not Reviewed
Halogen-Free Status
Not Reviewed

China RoHS

Need more information on product environmental compliance?

Email productcompliance@molex.com
For a multiple part number RoHS Certificate of Compliance, click here

Please visit the Contact Us section for any non-product compliance questions.

Search Parts in this Series
19002Series

Use With
19001-0010 , 19001-0011

Application Tooling | **FAQ**

Tooling specifications and manuals are found by selecting the products below. Crimp Height Specifications are then contained in the Application Tooling Specification document.

Global

Description	Product #
Hand Crimp Tool	0640010200
Hand Crimp Tool	0640013000
Crimp Head for the AT-200™ Pneumatic Hand Tool	0640050200
Crimp Head for the AT-200™ Pneumatic Hand Tool	0640053000

This document was generated on 04/12/2010

PLEASE CHECK WWW.MOLEX.COM FOR LATEST PART INFORMATION

MATERIAL NUMBER LOOSE PCS	ENGINEERING NUMBER LOOSE PCS	MATERIAL NUMBER ON STRIP	ENGINEERING NUMBER ON STRIP	MATERIAL NUMBER ON TAPE	ENGINEERING NUMBER ON TAPE	"C" MAX	2 "D" MWID	"E" MIN	"F" REF	"H" REF
190020044	C-5265	190020046	C-5265Z	190020045	C-5265T	.31/7.9	.245/6.22	.144/3.66	.19/4.8	1.561/39.65
196060005	19606-0005	196060004	19606-0004	196060006	19606-0006	.30/7.6	.230/5.84	.120/3.05	.15/3.8	1.513/38.43

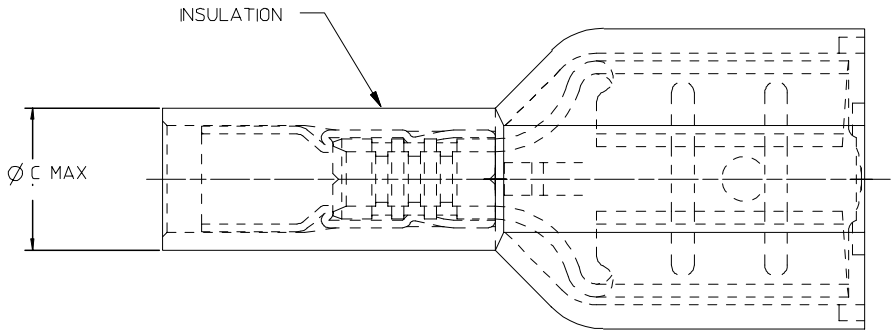

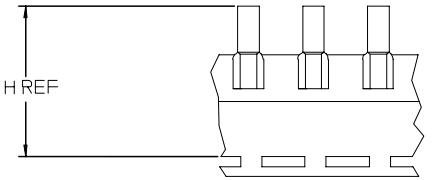

PARTS ON TAPE

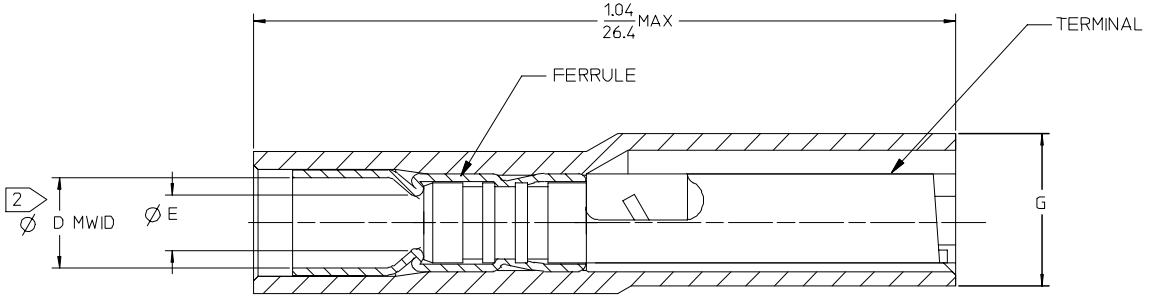

TERMINAL IS NOT SECTIONED FOR CLARITY

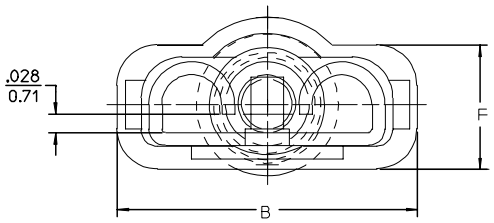

SALES DRAWING

NOTES:

1. MATERIAL: TERMINAL BRASS .018/0.46 THK REF.
   TERMINAL PLATING: ELECTRO TIN
   FERRULE: BRASS
   FERRULE PLATING: ELECTRO TIN
   INSULATION: NYLON 94V2 COLOR YELLOW.

2. MWID = MAXIMUM WIRE INSULATION DIAMETER

3. PART IS RoHS COMPLIANT (D)

ADD NOTE 3
EC NO: ETC2007-0243 2006/12/14
DRWN: JLOMASTRO 2006/12/15
CHKD: JMACNEIL 2006/12/15
APPR: JMACNEIL 2006/12/15
DESCRIPTION
REV: D

QUALITY SYMBOLS
▼=0
▽=0

GENERAL TOLERANCES (UNLESS SPECIFIED)

	mm	INCH
4 PLACES	± ---	± ---
3 PLACES	± ---	± .005
2 PLACES	± 0.13	± .01
1 PLACE	± 0.25	± ---
ANGULAR ±1/2°		

DRAFT WHERE APPLICABLE MUST REMAIN WITHIN DIMENSIONS

DIMENSION STYLE: IN/MM
SCALE: 4:1
DESIGN UNITS: INCH
THIRD ANGLE PROJECTION

DRAWN BY: BENDERLE DATE: 2005/04/15
CHECKED BY: R DEROSS DATE: 2005/04/15
APPROVED BY: R DEROSS DATE: 2005/04/15

TITLE: AVIKRIMP FEMALE FIQD 12-10 AWG

MOLEX INCORPORATED

MATERIAL NO.: SEE CHART
DOCUMENT NO.: SD-19002-005
SHEET NO.: 1 OF 1
SIZE: C

THIS DRAWING CONTAINS INFORMATION THAT IS PROPRIETARY TO MOLEX INCORPORATED AND SHOULD NOT BE USED WITHOUT WRITTEN PERMISSION

tb_frame_C_P_ME_T
Rev. D 2004/04/02