THIS DRAWING IS UNPUBLISHED. RELEASED FOR PUBLICATION -,- .
© COPYRIGHT - By - ALL RIGHTS RESERVED.

| LOC | DIST |
|---|---|
| AF | 50 |

REVISIONS

| P | LTR | DESCRIPTION | DATE | DWN | APVD |
|---|---|---|---|---|---|
| | AB | REVISED PER ECR-13-011489 | 07DEC2013 | KH | PD |

1 SUPPLIED IN LOOSE PIECE.

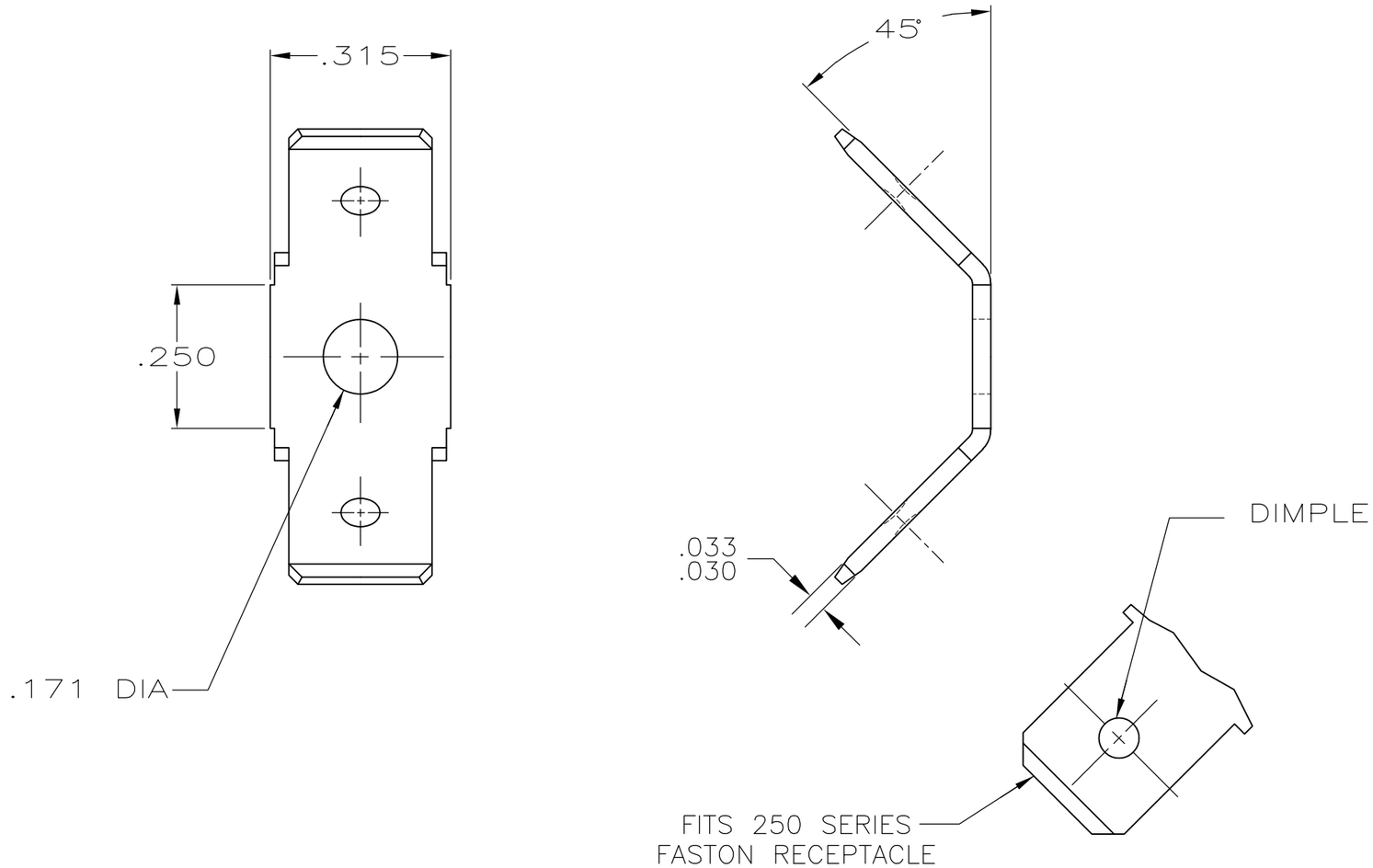


| FINISH | PART NUMBER |
|---|---|
| – | – |
| – | 41616 |

THIS DRAWING IS A CONTROLLED DOCUMENT.

DIMENSIONS: INCHES

TOLERANCES UNLESS OTHERWISE SPECIFIED:

| | |
|---|---|
| 0 PLC | ± – |
| 1 PLC | ± – |
| 2 PLC | ± – |
| 3 PLC | ± .010 |
| 4 PLC | ± – |
| ANGLES | ± – |

MATERIAL: BRASS

FINISH: SEE TABLE

DWN MICHAEL S. FEHER 26SEP2002
CHK NATHAN DEIBERT 26SEP2002
APVD NATHAN DEIBERT 26SEP2002
PRODUCT SPEC —
APPLICATION SPEC —
WEIGHT —

CUSTOMER DRAWING

TE Connectivity

NAME: TAB, FASTON, LOOSE PIECE, .250 SERIES

| SIZE | CAGE CODE | DRAWING NO | RESTRICTED TO |
|---|---|---|---|
| A3 | 00779 | C-41616 | — |

| SCALE | SHEET | REV |
|---|---|---|
| 4:1 | 1 OF 1 | AB |