FAIRCHILD
SEMICONDUCTOR®

Zeners
BZX85C 3V3 - BZX85C 33

Absolute Maximum Ratings*

T_A = 25°C unless otherwise noted

Symbol	Parameter	Value	Units
P_D	Power Dissipation	1.3	W
T_{STG}	Storage Temperature Range	-65 to +200	°C
T_J	Operating Junction Temperature	+ 200	°C
	Lead Temperature (1/16" from case for 10 seconds)	+ 230	°C

*These ratings are limiting values above which the serviceability of the diode may be impaired.

NOTES:
1) These ratings are based on a maximum junction temperature of 200 degrees C.
2) These are steady state limits. The factory should be consulted on applications involving pulsed or low duty cycle operations.

Tolerance: C = 5%

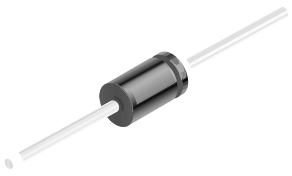

DO-41

COLOR BAND DENOTES CATHODE

Electrical Characteristics

T_A = 25°C unless otherwise noted

Device	V_Z(V)	Z_Z(Ω)	@ I_Z(mA)	Z_{ZK}(Ω)	@I_{ZK}(mA)	I_R(μA)	@V_R(V)	I_{SURGE}(mA)	I_{ZRM}(mA)
BZX85C 3V3	3.3	20	80	400	1.0	60	1.0	1,380	276
BZX85C 3V6	3.6	15	60	500	1.0	30	1.0	1,260	252
BZX85C 3V9	3.9	15	60	500	1.0	5.0	1.0	1,190	234
BZX85C 4V3	4.3	13	50	500	1.0	3.0	1.0	1,070	217
BZX85C 4V7	4.7	13	45	600	1.0	3.0	1.5	970	193
BZX85C 5V1	5.1	10	45	500	1.0	1.0	2.0	890	178
BZX85C 5V6	5.6	7.0	45	400	1.0	1.0	2.0	810	162
BZX85C 6V2	6.2	4.0	35	300	1.0	1.0	3.0	730	146
BZX85C 6V8	6.8	3.5	35	300	1.0	1.0	4.0	660	133
BZX85C 7V5	7.5	3.0	35	200	1.0	1.0	4.5	605	121
BZX85C 8V2	8.2	5.0	25	200	0.5	1.0	5.0	550	110
BZX85C 9V1	9.1	5.0	25	200	0.5	1.0	6.5	500	100
BZX85C 10	10	7.0	25	200	0.5	0.5	7.0	454	91
BZX85C 11	11	8.0	20	300	0.5	0.5	7.7	414	83
BZX85C 12	12	9.0	20	350	0.5	0.5	8.4	380	76
BZX85C 13	13	10	20	400	0.5	0.5	9.1	344	69
BZX85C 15	15	15	15	500	0.5	0.5	10.5	304	61
BZX85C 16	16	15	15	500	0.5	0.5	11	285	57
BZX85C 18	18	20	15	500	0.5	0.5	12.5	250	50
BZX85C 20	20	24	10	600	0.5	0.5	14	225	45
BZX85C 22	22	25	10	600	0.5	0.5	15.5	205	41
BZX85C 24	24	25	10	600	0.5	0.5	17	190	38
BZX85C 27	27	30	8.0	750	0.25	0.5	19	170	34
BZX85C 30	30	30	8.0	1,000	0.25	0.5	21	150	30
BZX85C 33	33	35	8.0	1,200	0.25	0.5	23	135	27

V_F Foward Voltage = 1.2 V Maximum @ I_F = 200 mA for all BZX85 series

©2001 Fairchild Semiconductor Corporation

Zeners (BZX85C 3V3 - BZX85C 33)
(continued)

Typical Characteristics

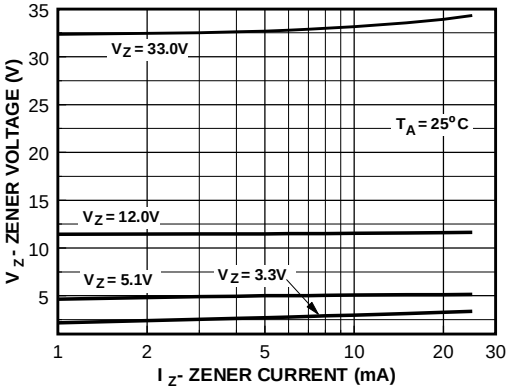

Zener Current vs. Zener Voltage

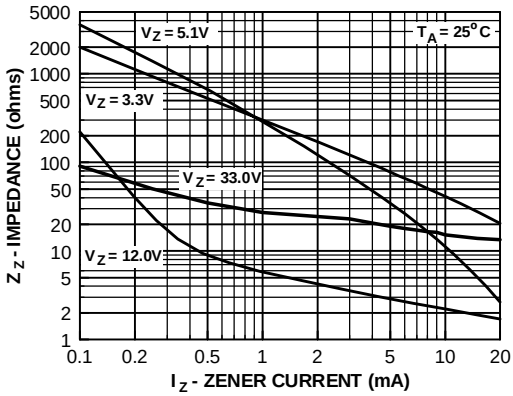

Zener Current vs. Zener Impedence

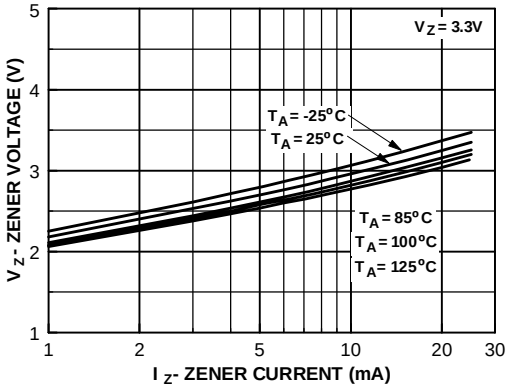

3.3 Zener Voltage vs. Temperature

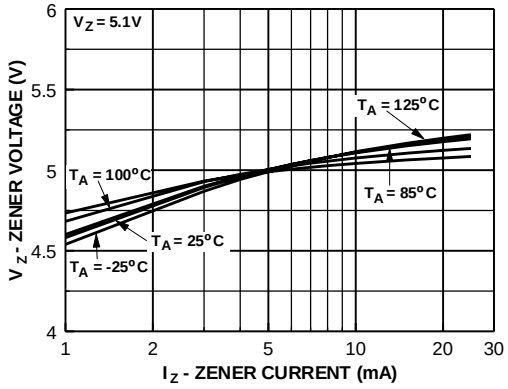

5.1 Zener Voltage vs. Temperature

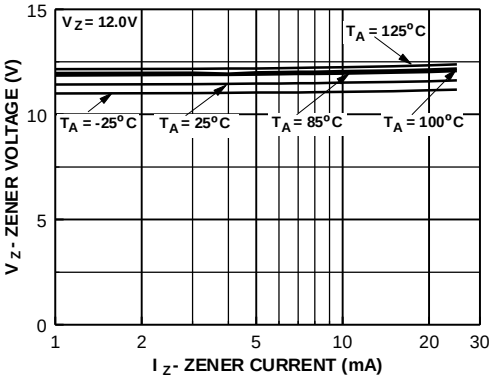

12 Zener Voltage vs. Zener Temperature

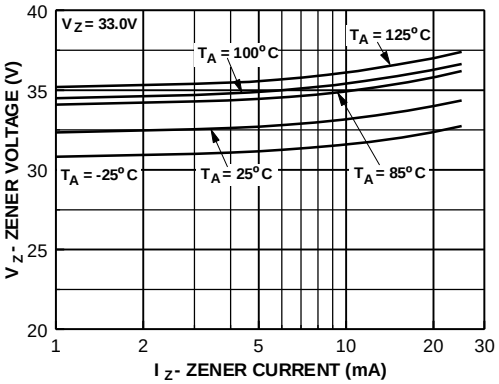

33 Zener Voltage vs. Zener Temperature

©2001 Fairchild Semiconductor Corporation

TRADEMARKS

The following are registered and unregistered trademarks Fairchild Semiconductor owns or is authorized to use and is not intended to be an exhaustive list of all such trademarks.

ACEx™	FAST ®	OPTOLOGIC™	SMART START™	VCX™
Bottomless™	FASTr™	OPTOPLANAR™	STAR*POWER™	
CoolFET™	FRFET™	PACMAN™	Stealth™	
CROSSVOLT™	GlobalOptoisolator™	POP™	SuperSOT™-3	
DenseTrench™	GTO™	Power247™	SuperSOT™-6	
DOME™	HiSeC™	PowerTrench®	SuperSOT™-8	
EcoSPARK™	ISOPLANAR™	QFET™	SyncFET™	
E^2CMOS™	LittleFET™	QS™	TinyLogic™	
EnSigna™	MicroFET™	QT Optoelectronics™	TruTranslation™	
FACT™	MicroPak™	Quiet Series™	UHC™	
FACT Quiet Series™	MICROWIRE™	SILENT SWITCHER®	UltraFET®	

STAR*POWER is used under license

DISCLAIMER

FAIRCHILD SEMICONDUCTOR RESERVES THE RIGHT TO MAKE CHANGES WITHOUT FURTHER NOTICE TO ANY PRODUCTS HEREIN TO IMPROVE RELIABILITY, FUNCTION OR DESIGN. FAIRCHILD DOES NOT ASSUME ANY LIABILITY ARISING OUT OF THE APPLICATION OR USE OF ANY PRODUCT OR CIRCUIT DESCRIBED HEREIN; NEITHER DOES IT CONVEY ANY LICENSE UNDER ITS PATENT RIGHTS, NOR THE RIGHTS OF OTHERS.

LIFE SUPPORT POLICY

FAIRCHILD'S PRODUCTS ARE NOT AUTHORIZED FOR USE AS CRITICAL COMPONENTS IN LIFE SUPPORT DEVICES OR SYSTEMS WITHOUT THE EXPRESS WRITTEN APPROVAL OF FAIRCHILD SEMICONDUCTOR CORPORATION.
As used herein:

1. Life support devices or systems are devices or systems which, (a) are intended for surgical implant into the body, or (b) support or sustain life, or (c) whose failure to perform when properly used in accordance with instructions for use provided in the labeling, can be reasonably expected to result in significant injury to the user.

2. A critical component is any component of a life support device or system whose failure to perform can be reasonably expected to cause the failure of the life support device or system, or to affect its safety or effectiveness.

PRODUCT STATUS DEFINITIONS

Definition of Terms

Datasheet Identification	Product Status	Definition
Advance Information	Formative or In Design	This datasheet contains the design specifications for product development. Specifications may change in any manner without notice.
Preliminary	First Production	This datasheet contains preliminary data, and supplementary data will be published at a later date. Fairchild Semiconductor reserves the right to make changes at any time without notice in order to improve design.
No Identification Needed	Full Production	This datasheet contains final specifications. Fairchild Semiconductor reserves the right to make changes at any time without notice in order to improve design.
Obsolete	Not In Production	This datasheet contains specifications on a product that has been discontinued by Fairchild semiconductor. The datasheet is printed for reference information only.