SYNSEMI SEMICONDUCTOR

BZX384C Series

ZENER DIODES

FEATURES :

* Silicon Planar Power Zener Diodes
* The Zener voltages are graded according to the internation E 24 standard.
* Standard Zener voltage tolerance is ± 5 %. Replace "C" with "B" for ± 2 % tolerance.
* Pb / RoHS Free

MECHANICAL DATA

* Case : SOD-323 Plastic Package
* Weight : 0.004 gram

SOD-323

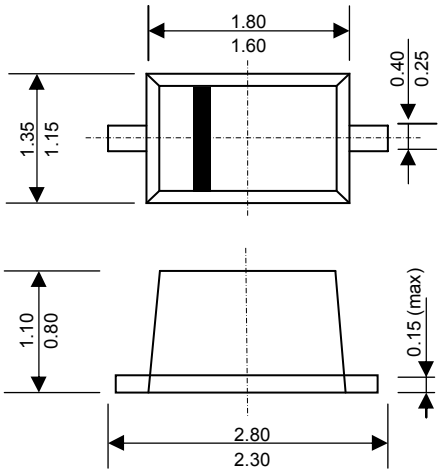

Dimensions in millimeters

Maximum Ratings and Thermal Characteristics (Ta 25 °C unless otherwise noted)

Parameter	Symbol	Value	Unit
Zener Current	I_{ZM}	250	mA
Power Dissipation at T_{amp} = 25 °C	P_{tot}	200(1)	Mw
Thermal Resistance Junction to Ambient Air	$R_{\theta JA}$	650(2)	°C/W
Junction Temperature	T_J	150	°C
Storage Temperature Range	T_S	-65 to + 150	°C

Notes:

(1) Device on fiberglass substrate

(2) Valid provided that electrodes are ambient temperature

SYNSEMI SEMICONDUCTOR

ELECTRICAL CHARACTERISTICS

Rating at 25 °C ambient temperature unless otherwise specified

Type	Marking	Zener Voltage rang (1) at I_{ZT1}		Dynamic Resistance at I_{ZT1}	Temp.Coefficient of Zener voltage at I_{ZT1}		Test Current	Dynamic Resistance at I_{ZT2}	Test Current	Reverse Leakage Current at	
		V_Z (V)			α_{VZ} (10^{-4}/K)						
		min	max	r_{zj} (Ω)	min	max	I_{ZT1} (mA)	r_{zj} (Ω)	I_{ZT2} (mA)	I_R (μA)	V_R (V)
BZX384C2V4	**W1**	2.20	2.60	70 (≤100)	-9.0	-4.0	5	275	1.0	50.0	1.0
BZX384C2V7	**W2**	2.50	2.90	75 (≤100)	-9.0	-4.0	5	300 (≤600)	1.0	20.0	1.0
BZX384C3V0	**W3**	2.80	3.20	80 (≤95)	-9.0	-3.0	5	325 (≤600)	1.0	10.0	1.0
BZX384C3V3	**W4**	3.10	3.50	85 (≤95)	-8.0	-3.0	5	350 (≤600)	1.0	5.00	1.0
BZX384C3V6	**W5**	3.40	3.80	85 (≤90)	-8.0	-3.0	5	375 (≤600)	1.0	5.00	1.0
BZX384C3V9	**W6**	3.70	4.10	85 (≤90)	-7.0	-3.0	5	400 (≤600)	1.0	3.00	1.0
BZX384C4V3	**W7**	4.00	4.60	80 (≤90)	-6.0	-1.0	5	410 (≤600)	1.0	3.00	1.0
BZX384C4V7	**W8**	4.40	5.00	50 (≤80)	-5.0	2.0	5	425 (≤500)	1.0	3.00	2.0
BZX384C5V1	**W9**	4.80	5.40	40 (≤60)	-3.0	4.0	5	400 (≤480)	1.0	2.00	2.0
BZX384C5V6	**WA**	5.20	6.00	15 (≤40)	-2.0	6.0	5	80 (≤400)	1.0	1.00	2.0
BZX384C6V2	**WB**	5.80	6.60	6.0 (≤10)	-1.0	7.0	5	40 (≤150)	1.0	3.00	4.0
BZX384C6V8	**WC**	6.40	7.20	6.0 (≤15)	2.0	7.0	5	30 (≤80)	1.0	2.00	4.0
BZX384C7V5	**WD**	7.00	7.90	6.0 (≤15)	3.0	7.0	5	30 (≤80)	1.0	1.00	5.0
BZX384C8V2	**WE**	7.70	8.70	6.0 (≤15)	4.0	7.0	5	40 (≤80)	1.0	0.70	5.0
BZX384C9V1	**WF**	8.50	9.60	6.0 (≤15)	5.0	8.0	5	40 (≤100)	1.0	0.50	6.0
BZX384C10	**WG**	9.40	10.6	8.0 (≤20)	5.0	8.0	5	50 (≤150)	1.0	0.20	7.0
BZX384C11	**WH**	10.4	11.6	10 (≤20)	5.0	9.0	5	50 (≤150)	1.0	0.10	8.0
BZX384C12	**WI**	11.4	12.7	10 (≤25)	6.0	9.0	5	50 (≤150)	1.0	0.10	8.0
BZX384C13	**WK**	12.4	14.1	10 (≤30)	7.0	9.0	5	50 (≤170)	1.0	0.10	8.0
BZX384C15	**WL**	13.8	15.6	10 (≤30)	7.0	9.0	5	50 (≤200)	1.0	0.05	0.7 Vznom.
BZX384C16	**WM**	15.3	17.1	10 (≤40)	8.0	9.5	5	50 (≤200)	1.0	0.05	0.7 Vznom.
BZX384C18	**WN**	16.8	19.1	10 (≤45)	8.0	9.5	5	50 (≤225)	1.0	0.05	0.7 Vznom.
BZX384C20	**WO**	18.8	21.2	15 (≤55)	8.0	10.0	5	60 (≤225)	1.0	0.05	0.7 Vznom.
BZX384C22	**WP**	20.8	23.3	20 (≤55)	8.0	10.0	5	60 (≤250)	1.0	0.05	0.7 Vznom.
BZX384C24	**WR**	22.8	25.6	25 (≤70)	8.0	10.0	5	60 (≤250)	1.0	0.05	0.7 Vznom.
BZX384C27	**WS**	25.1	28.9	25 (≤80)	8.0	10.0	2	65 (≤300)	0.5	0.05	0.7 Vznom.
BZX384C30	**WT**	28.0	32.0	30 (≤80)	8.0	10.0	2	70 (≤300)	0.5	0.05	0.7 Vznom.
BZX384C33	**WU**	31.0	35.0	35 (≤80)	8.0	10.0	2	75 (≤325)	0.5	0.05	0.7 Vznom.
BZX384C36	**WW**	34.0	38.0	35 (≤90)	8.0	10.0	2	80 (≤350)	0.5	0.05	0.7 Vznom.
BZX384C39	**WX**	37.0	41.0	40 (≤130)	10.0	12.0	2	80 (≤350)	0.5	0.05	0.7 Vznom.
BZX384C43	**WY**	40.0	46.0	45 (≤150)	10.0	12.0	2	85 (≤375)	0.5	0.05	0.7 Vznom.
BZX384C47	**WZ**	44.0	50.0	50 (≤170)	10.0	12.0	2	85 (≤375)	0.5	0.05	0.7 Vznom.
BZX384C51	**X1**	48.0	54.0	60 (≤180)	10.0	12.0	2	85 (≤400)	0.5	0.05	0.7 Vznom.
BZX384C56	**X2**	52.0	60.0	70 (≤200)	9.0	11.0	2	100 (≤425)	0.5	0.05	0.7 Vznom.
BZX384C62	**X3**	58.0	66.0	80 (≤215)	9.0	12.0	2	100 (≤450)	0.5	0.05	0.7 Vznom.
BZX384C68	**X4**	64.0	72.0	90 (≤240)	10.0	12.0	2	150 (≤475)	0.5	0.05	0.7 Vznom.
BZX384C75	**X5**	70.0	79.0	95 (≤255)	10.0	12.0	2	170 (≤500)	0.5	0.05	0.7 Vznom.

Notes :

(1) Measured with pulses $_p$ = 5 ms