Zener Diodes with Surge Current Specification



FEATURES

- High reliability
- Stand-off voltage range 8.2 V to 220 V
- Excellent clamping cabability
- Fast response time (typ. £ 1 ps from 0 to $V_{Zmin.}$)
- AEC-Q101 qualified
- Compliant to RoHS Directive 2002/95/EC and in accordance to WEEE 2002/96/EC

RoHS COMPLIANT

APPLICATIONS

- Protection from high voltage, high energy transients

PRIMARY CHARACTERISTICS		
PARAMETER	VALUE	UNIT
V_Z range nom.	10 to 270	V
Test current I_{ZT}	2 to 50	mA
V_Z specification	Pulse current	
Int. construction	Single	

ORDERING INFORMATION			
DEVICE NAME	ORDERING CODE	TAPED UNITS PER REEL	MINIMUM ORDER QUANTITY
BZG04-series	BZG04-series-TR3	6000 per 13" reel	6000/box
BZG04-series	BZG04-series-TR	1500 per 7" reel	

PACKAGE				
PACKAGE NAME	WEIGHT	MOLDING COMPOUND FLAMMABILITY RATING	MOISTURE SENSITIVITY LEVEL	SOLDERING CONDITIONS
DO-214AC	77 mg	UL 94 V-0	MSL level 1 (according J-STD-020)	260 °C/10 s at terminals

ABSOLUTE MAXIMUM RATINGS (T_{amb} = 25 °C, unless otherwise specified)				
PARAMETER	TEST CONDITION	SYMBOL	VALUE	UNIT
Power dissipation	R_{thJA} < 25 K/W, T_{amb} = 100 °C	P_{tot}	3000	mW
	R_{thJA} < 100 K/W, T_{amb} = 50 °C	P_{tot}	1250	mW
Non repetitive peak surge power dissipation	t_p = 10/1000 µs sq.pulse, T_j = 25 °C prior to surge	P_{ZSM}	300	W
Peak forward surge current	10 ms single half sine wave	I_{FSM}	50	A
Junction to lead		R_{thJL}	25	K/W
Junction to ambient air	Mounted on epoxy-glass hard tissue,fig. 1b	R_{thJA}	150	K/W
	Mounted on epoxy-glass hard tissue, fig. 1b	R_{thJA}	125	K/W
	Mounted on Al-oxid-ceramic (Al_2O_3), fig. 1b	R_{thJA}	100	K/W
Junction temperature		T_j	150	°C
Storage temperature range		T_{stg}	- 65 to + 150	°C
Forward voltage (max.)	I_F = 0.5 A	V_F	1.2	V

For technical questions within your region: DiodesAmericas@vishay.com, DiodesAsia@vishay.com, DiodesEurope@vishay.com

THIS DOCUMENT IS SUBJECT TO CHANGE WITHOUT NOTICE. THE PRODUCTS DESCRIBED HEREIN AND THIS DOCUMENT ARE SUBJECT TO SPECIFIC DISCLAIMERS, SET FORTH AT www.vishay.com/doc?91000

ELECTRICAL CHARACTERISTICS (T_{amb} = 25 °C, unless otherwise specified)

PART NUMBER	ZENER VOLTAGE RANGE	TEST CURRENT	STAND OFF VOLTAGE		BREAKDOWN VOLTAGE	CLAMPING VOLTAGE (1)		TEMPERATURE COEFFICIENT		JUNCTION CAPACITANCE
	V_Z at I_{ZT1}	I_{ZT1}	V_R at I_R		$V_{(BR)}$ at I_{ZT1}	$V_{CL(R)}$ at I_{PP}	I_{PP}	TK_{VZ} at I_{ZT1}		C_j at V_R = 0 V, f = 1 MHZ
	V	mA	V	µA	V	V	A	%/K		pF
	NOM.			MAX.	MIN.	MIN.		TYP.	MAX.	TYP.
BZG04-8V2	10	50	8.2	20	9.4	14.8	20.3	0.05	0.09	1200
BZG04-9V1	11	50	9.1	5	10.4	15.7	19.1	0.05	0.1	1100
BZG04-10	12	50	10	5	11.4	17	17.7	0.05	0.1	1000
BZG04-11	13	50	11	5	12.4	18.9	15.9	0.05	0.1	850
BZG04-12	15	50	12	5	13.8	20.9	14.4	0.05	0.1	815
BZG04-13	16	25	13	5	15.3	22.9	13.1	0.06	0.11	785
BZG04-15	18	25	15	5	16.8	25.6	11.7	0.06	0.11	710
BZG04-16	20	25	16	5	18.8	28.4	10.6	0.06	0.11	655
BZG04-18	22	25	18	5	20.8	31	9.7	0.06	0.11	610
BZG04-20	24	25	20	5	22.8	33.8	8.9	0.06	0.11	570
BZG04-22	27	25	22	5	25.1	38.1	7.9	0.06	0.11	545
BZG04-24	30	25	24	5	28	42.2	7.1	0.06	0.11	505
BZG04-27	33	25	27	5	31	46.2	6.5	0.06	0.11	475
BZG04-30	36	10	30	5	34	50.1	6	0.06	0.11	450
BZG04-33	39	10	33	5	37	54.1	5.5	0.06	0.11	420
BZG04-36	43	10	36	5	40	60.7	4.9	0.07	0.12	390
BZG04-39	47	10	39	5	44	65.5	4.6	0.07	0.12	370
BZG04-43	51	10	43	5	48	70.8	4.2	0.07	0.12	350
BZG04-47	56	10	47	5	52	78.6	3.8	0.07	0.12	330
BZG04-51	62	10	51	5	58	86.5	3.5	0.08	0.13	310
BZG04-56	68	10	56	5	64	94.4	3.2	0.08	0.13	291
BZG04-62	75	10	62	5	70	103.5	2.9	0.08	0.13	280
BZG04-68	82	10	68	5	77	114	2.6	0.08	0.13	275
BZG04-75	91	5	75	5	85	126	2.4	0.09	0.13	260
BZG04-82	100	5	82	5	94	139	2.2	0.09	0.13	250
BZG04-91	110	5	91	5	104	152	2	0.09	0.13	243
BZG04-100	120	5	100	5	114	167	1.8	0.09	0.13	170
BZG04-110	130	5	110	5	124	185	1.6	0.09	0.13	153
BZG04-120	150	5	120	5	138	204	1.5	0.09	0.13	150
BZG04-130	160	5	130	5	153	224	1.3	0.09	0.13	145
BZG04-150	180	5	150	5	168	249	1.2	0.09	0.13	140
BZG04-160	200	5	160	5	188	276	1.1	0.09	0.13	135
BZG04-180	220	2	180	5	208	305	1	0.09	0.13	131
BZG04-200	240	2	200	5	228	336	0.9	0.09	0.13	122
BZG04-220	270	2	220	5	251	380	0.8	0.09	0.13	120

Note

(1) 10/1000 µs pulse

For technical questions within your region: DiodesAmericas@vishay.com, DiodesAsia@vishay.com, DiodesEurope@vishay.com
THIS DOCUMENT IS SUBJECT TO CHANGE WITHOUT NOTICE. THE PRODUCTS DESCRIBED HEREIN AND THIS DOCUMENT ARE SUBJECT TO SPECIFIC DISCLAIMERS, SET FORTH AT www.vishay.com/doc?91000

BASIC CHARACTERISTICS (T_{amb} = 25 °C, unless otherwise specified)

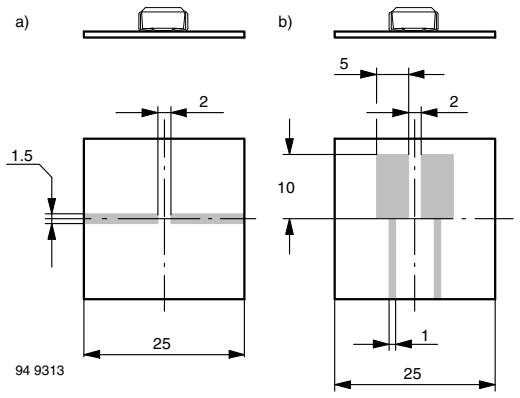

Fig. 1 - Boards for R_{thJA} Definition (Copper Overlay 35 µ)

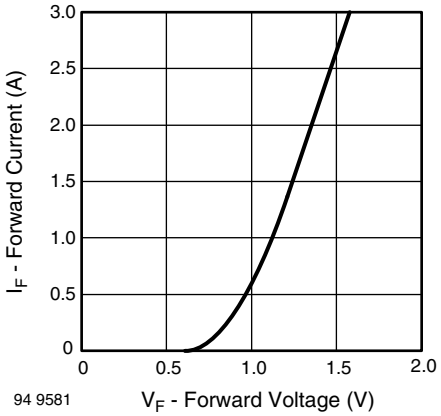

Fig. 3 - Forward Current vs. Forward Voltage

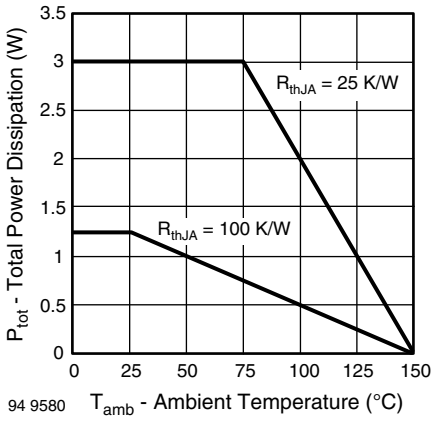

Fig. 2 - Typ. Total Power Dissipation vs. Ambient Temperature

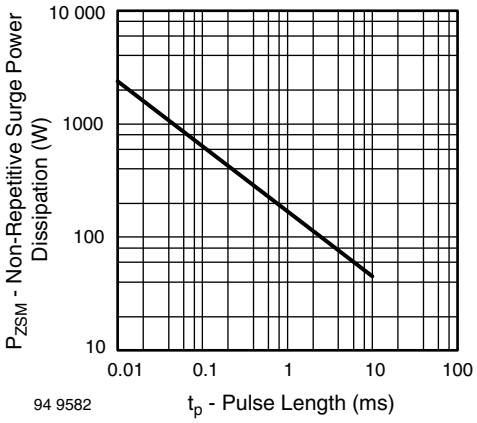

Fig. 4 - Non Repetitive Surge Power Dissipation vs. Pulse Length

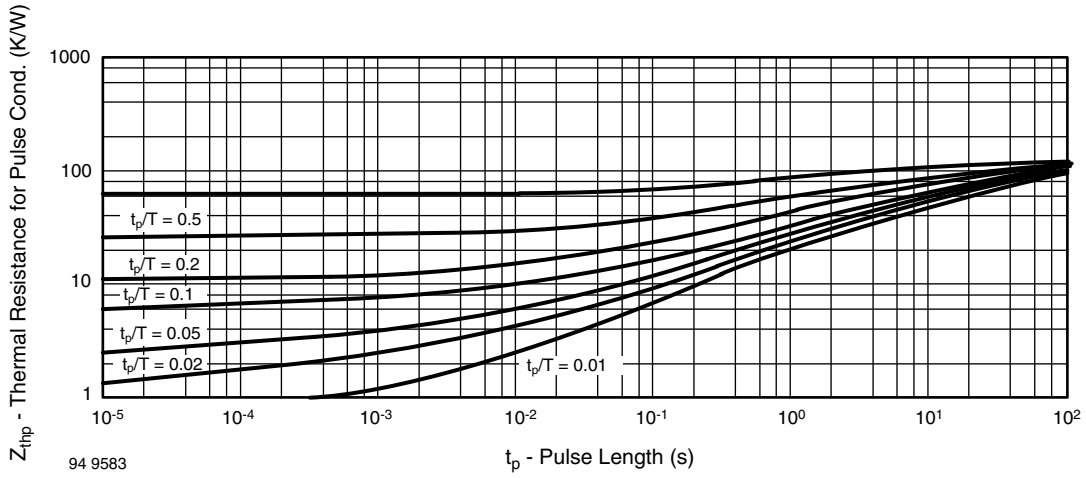

Fig. 5 - Thermal Response

For technical questions within your region: DiodesAmericas@vishay.com, DiodesAsia@vishay.com, DiodesEurope@vishay.com
THIS DOCUMENT IS SUBJECT TO CHANGE WITHOUT NOTICE. THE PRODUCTS DESCRIBED HEREIN AND THIS DOCUMENT ARE SUBJECT TO SPECIFIC DISCLAIMERS, SET FORTH AT www.vishay.com/doc?91000

PACKAGE DIMENSIONS in millimeters (inches): **DO-214AC**

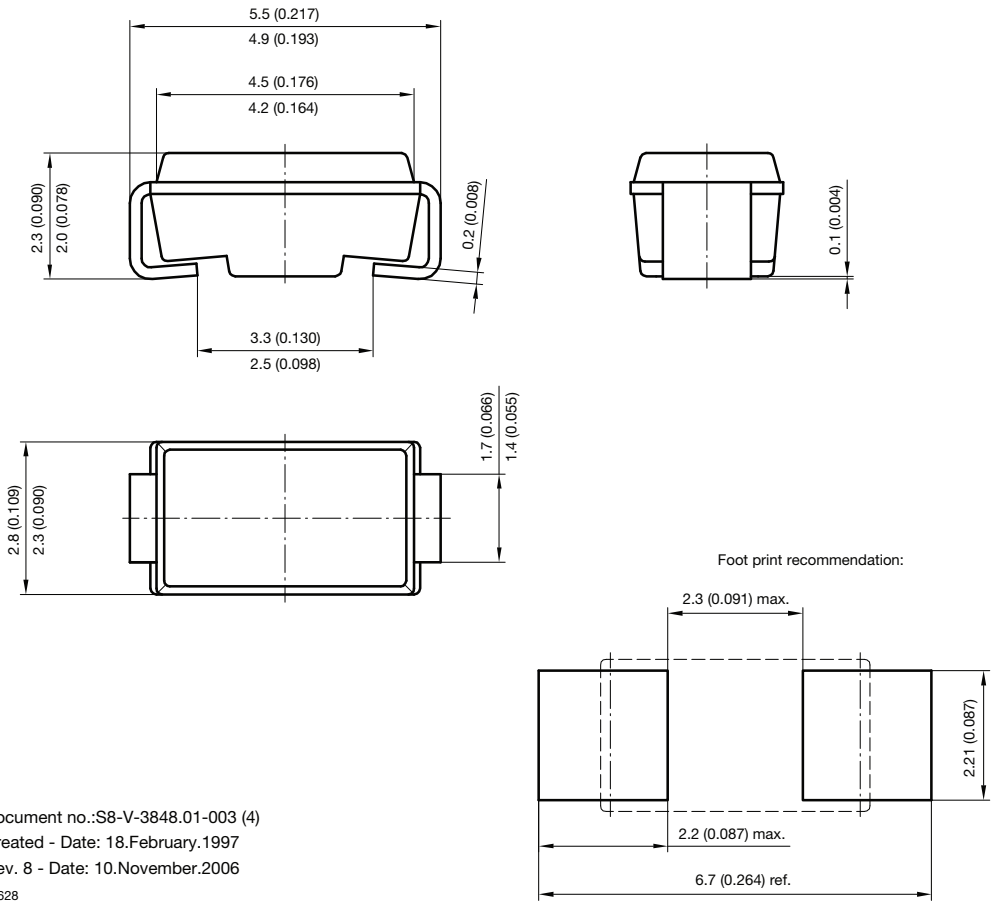

Document no.:S8-V-3848.01-003 (4)
Created - Date: 18.February.1997
Rev. 8 - Date: 10.November.2006
19628

For technical questions within your region: DiodesAmericas@vishay.com, DiodesAsia@vishay.com, DiodesEurope@vishay.com

THIS DOCUMENT IS SUBJECT TO CHANGE WITHOUT NOTICE. THE PRODUCTS DESCRIBED HEREIN AND THIS DOCUMENT ARE SUBJECT TO SPECIFIC DISCLAIMERS, SET FORTH AT www.vishay.com/doc?91000

Disclaimer

ALL PRODUCT, PRODUCT SPECIFICATIONS AND DATA ARE SUBJECT TO CHANGE WITHOUT NOTICE TO IMPROVE RELIABILITY, FUNCTION OR DESIGN OR OTHERWISE.

Vishay Intertechnology, Inc., its affiliates, agents, and employees, and all persons acting on its or their behalf (collectively, “Vishay”), disclaim any and all liability for any errors, inaccuracies or incompleteness contained in any datasheet or in any other disclosure relating to any product.

Vishay makes no warranty, representation or guarantee regarding the suitability of the products for any particular purpose or the continuing production of any product. To the maximum extent permitted by applicable law, Vishay disclaims (i) any and all liability arising out of the application or use of any product, (ii) any and all liability, including without limitation special, consequential or incidental damages, and (iii) any and all implied warranties, including warranties of fitness for particular purpose, non-infringement and merchantability.

Statements regarding the suitability of products for certain types of applications are based on Vishay’s knowledge of typical requirements that are often placed on Vishay products in generic applications. Such statements are not binding statements about the suitability of products for a particular application. It is the customer’s responsibility to validate that a particular product with the properties described in the product specification is suitable for use in a particular application. Parameters provided in datasheets and/or specifications may vary in different applications and performance may vary over time. All operating parameters, including typical parameters, must be validated for each customer application by the customer’s technical experts. Product specifications do not expand or otherwise modify Vishay’s terms and conditions of purchase, including but not limited to the warranty expressed therein.

Except as expressly indicated in writing, Vishay products are not designed for use in medical, life-saving, or life-sustaining applications or for any other application in which the failure of the Vishay product could result in personal injury or death. Customers using or selling Vishay products not expressly indicated for use in such applications do so at their own risk and agree to fully indemnify and hold Vishay and its distributors harmless from and against any and all claims, liabilities, expenses and damages arising or resulting in connection with such use or sale, including attorneys fees, even if such claim alleges that Vishay or its distributor was negligent regarding the design or manufacture of the part. Please contact authorized Vishay personnel to obtain written terms and conditions regarding products designed for such applications.

No license, express or implied, by estoppel or otherwise, to any intellectual property rights is granted by this document or by any conduct of Vishay. Product names and markings noted herein may be trademarks of their respective owners.

Material Category Policy

Vishay Intertechnology, Inc. hereby certifies that all its products that are identified as RoHS-Compliant fulfill the definitions and restrictions defined under Directive 2011/65/EU of The European Parliament and of the Council of June 8, 2011 on the restriction of the use of certain hazardous substances in electrical and electronic equipment (EEE) - recast, unless otherwise specified as non-compliant.

Please note that some Vishay documentation may still make reference to RoHS Directive 2002/95/EC. We confirm that all the products identified as being compliant to Directive 2002/95/EC conform to Directive 2011/65/EU.