Ultra Fast Recovery Silicon Power Rectifier

Features

- Multiple diffusion
- High voltage
- High current
- Ultra fast forward recovery time
- Ultra fast reverse recovery time

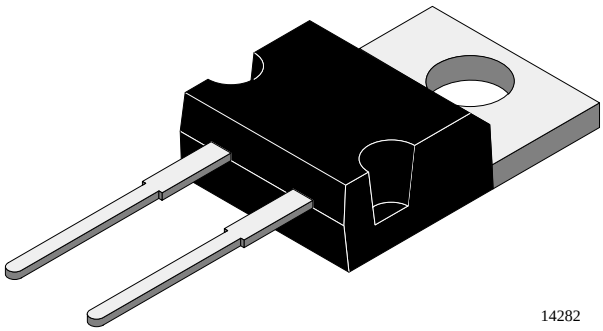
14282

Applications

Fast rectifiers in S.M.P.S, freewheeling and snubber diode in motor control circuits

Absolute Maximum Ratings

T_j = 25°C

Parameter	Test Conditions	Type	Symbol	Value	Unit
Reverse voltage =Repetitive peak reverse voltage		BYT86–600	V_R=V_{RRM}	600	V
		BYT86–800	V_R=V_{RRM}	800	V
		BYT86–1000	V_R=V_{RRM}	1000	V
Peak forward surge current	t_p= 10ms half sinewave		I_{FSM}	90	A
Repetitive peak forward current			I_{FRM}	25	A
Average forward current			I_{FAV}	8	A
Junction and storage temperature range			T_j=T_{stg}	–55...+150	°C

Maximum Thermal Resistance

T_j = 25°C

Parameter	Test Conditions	Symbol	Value	Unit
Junction case		R_{thJC}	2.4	K/W

Electrical Characteristics

T_j = 25°C

Parameter	Test Conditions	Type	Symbol	Min	Typ	Max	Unit
Forward voltage	I_F=8A		V_F			1.8	V
	I_F=8A, T_j=100°C		V_F			1.8	V
Reverse current	V_R=V_{RRM}		I_R			10	µA
	V_R=V_{RRM}, T_j=100°C		I_R			0.2	mA
Forward recovery time	I_F=8A, di_F/dt≦50A/µs		t_{fr}		350		ns
Turn on transient peak voltage			V_{FP}		7		V
Reverse recovery characteristics	I_F=8A, di_F/dt =–100A/µs, V_{Batt}=200V		I_{RM}		12		A
			t_{IRM}		110		ns
Reverse recovery time	I_F=8A, di_F/dt =–100A/µs, V_{Batt}=200V		t_{rr}		150		ns
	I_F=0.5A, I_R=1A, i_R=0.25A		t_{rr}			80	ns

Characteristics (T_j = 25°C unless otherwise specified)

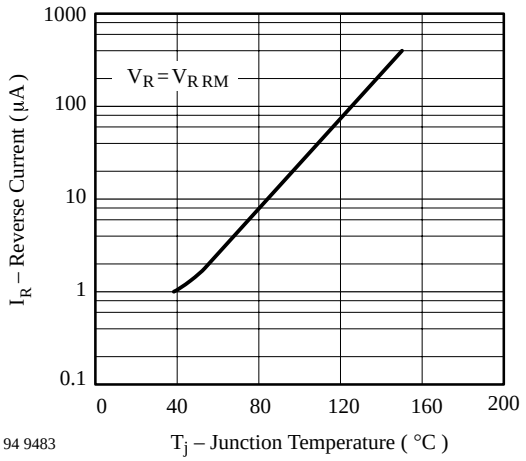

Figure 1. Typ. Reverse Current vs. Junction Temperature

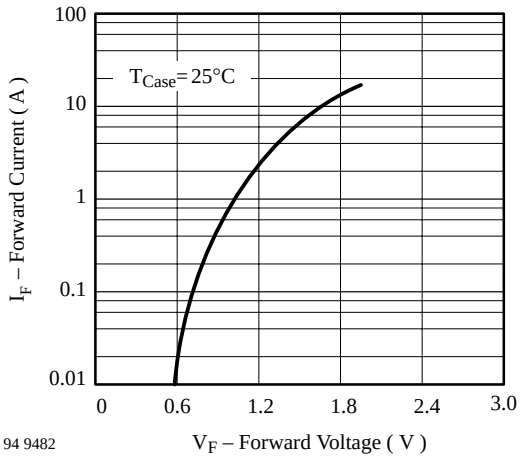

Figure 3. Typ. Forward Current vs. Forward Voltage

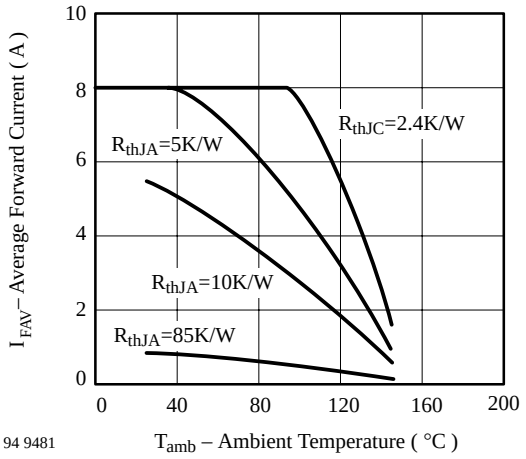

Figure 2. Max. Average Forward Current vs. Ambient Temperature

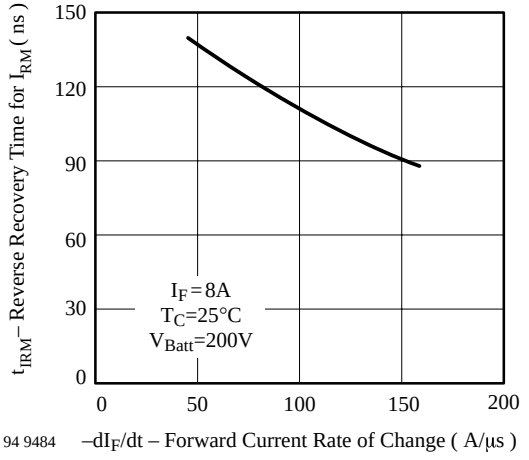

Figure 4. Reverse Recovery Time for I_{RM} vs. Forward Current Rate of Change

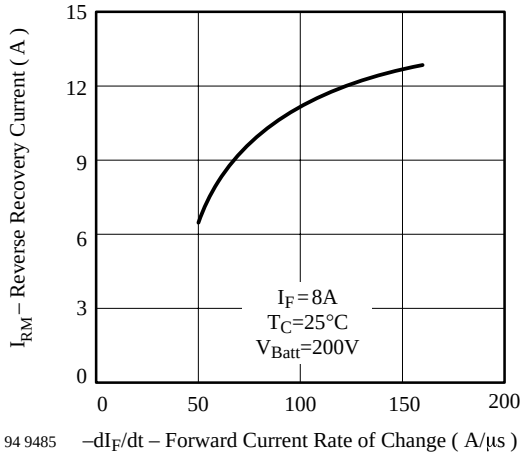

Figure 5. Reverse Recovery Current vs. Forward Current Rate of Change

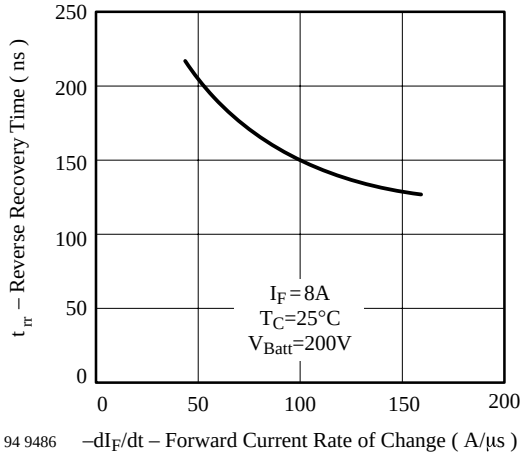

Figure 6. Reverse Recovery Time vs. Forward Current Rate of Change

Dimensions in mm

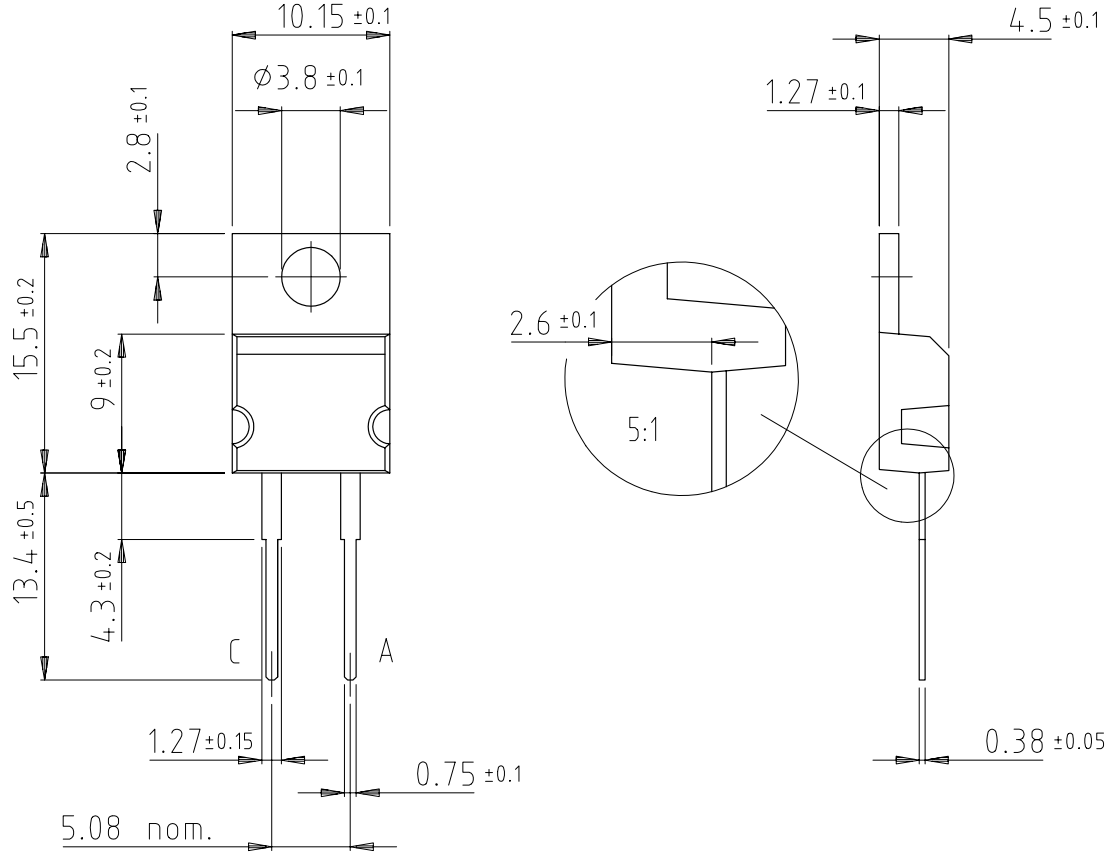

Ozone Depleting Substances Policy Statement

It is the policy of **Vishay Semiconductor GmbH** to

1. Meet all present and future national and international statutory requirements.

2. Regularly and continuously improve the performance of our products, processes, distribution and operating systems
   with respect to their impact on the health and safety of our employees and the public, as well as their impact on the environment.

It is particular concern to control or eliminate releases of those substances into the atmosphere which are known as ozone depleting substances (ODSs).

The Montreal Protocol (1987) and its London Amendments (1990) intend to severely restrict the use of ODSs and forbid their use within the next ten years. Various national and international initiatives are pressing for an earlier ban on these substances.

Vishay Semiconductor GmbH has been able to use its policy of continuous improvements to eliminate the use of ODSs listed in the following documents.

1. Annex A, B and list of transitional substances of the Montreal Protocol and the London Amendments respectively

2. Class I and II ozone depleting substances in the Clean Air Act Amendments of 1990 by the Environmental Protection Agency (EPA) in the USA

3. Council Decision 88/540/EEC and 91/690/EEC Annex A, B and C (transitional substances) respectively.

Vishay Semiconductor GmbH can certify that our semiconductors are not manufactured with ozone depleting substances and do not contain such substances.

We reserve the right to make changes to improve technical design and may do so without further notice.
Parameters can vary in different applications. All operating parameters must be validated for each customer application by the customer. Should the buyer use Vishay-Telefunken products for any unintended or unauthorized application, the buyer shall indemnify Vishay-Telefunken against all claims, costs, damages, and expenses, arising out of, directly or indirectly, any claim of personal damage, injury or death associated with such unintended or unauthorized use.

Vishay Semiconductor GmbH, P.O.B. 3535, D-74025 Heilbronn, Germany
Telephone: 49 (0)7131 67 2831, Fax number: 49 (0)7131 67 2423