BUT100

HIGH POWER NPN SILICON TRANSISTOR

- STMicroelectronics PREFERRED SALESTYPE
- NPN TRANSISTOR
- HIGH CURRENT CAPABILITY
- FAST SWITCHING SPEED
- HIGH RUGGEDNESS

APPLICATION
- MOTOR CONTROL
- UNINTERRUPTABLE POWER SUPPLY

DESCRIPTION
The BUT100 is a Multiepitaxial Planar NPN Transistor in TO-3 package. It is intended for use in high frequency and efficency converters, switching regulators and motor control.

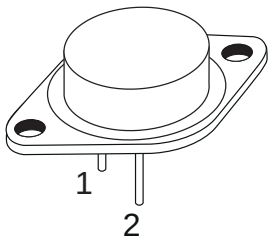

TO-3
(version " S ")

INTERNAL SCHEMATIC DIAGRAM

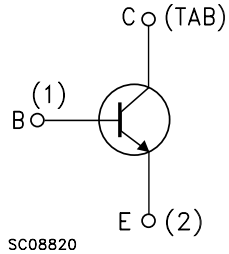

ABSOLUTE MAXIMUM RATINGS

Symbol	Parameter	Value	Unit
V_{CEV}	Collector-Emitter Voltage (V_{BE} = -1.5V)	200	V
V_{CEO}	Collector-Emitter Voltage (I_B = 0)	125	V
V_{EBO}	Emitter-Base Voltage (I_C = 0)	7	V
I_E	Emitter Current	50	A
I_{EM}	Emitter Peak Current	150	A
I_B	Base Current	10	A
I_{BM}	Base Peak Current	30	A
P_{tot}	Total Dissipation at T_c < 25 ^oC	300	W
T_{stg}	Storage Temperature	-65 to 200	^oC
T_j	Max. Operating Junction Temperature	200	^oC

THERMAL DATA

$R_{thj\text{-}case}$	Thermal Resistance Junction-case	Max	0.58	$^oC/W$

ELECTRICAL CHARACTERISTICS (T_{case} = 25 ^oC unless otherwise specified)

Symbol	Parameter	Test Conditions	Min.	Typ.	Max.	Unit
I_{CER}	Collector Cut-off Current (R_{BE} = 5Ω)	V_{CE} = V_{CEV} V_{CE} = V_{CEV} T_C= 100^oC			1 5	mA mA
I_{CEV}	Collector Cut-off Current (V_{BE} = -1.5V)	V_{CE} = V_{CEV} V_{CE} = V_{CEV} T_C = 100^oC			1 4	mA mA
I_{EBO}	Emitter Cut-off Current (I_C = 0)	V_{EB} = 5 V			1	mA
$V_{CEO(sus)}$*	Collector-Emitter Sustaining Voltage (I_B = 0)	I_C = 0.2 A L = 25mH	125			V
V_{EBO}	Emitter-Base Voltage (I_C = 0)	I_E = 50mA	7			V
$V_{CE(sat)}$*	Collector-Emitter Saturation Voltage	I_C = 50A I_B = 2.5A I_C = 100A I_B = 10A I_C = 50A I_B = 2.5A T_c = 100^oC I_C = 100A I_B = 10A T_c = 100^oC			0.9 0.9 1.2 1.5	V V V V
$V_{BE(sat)}$*	Base-Emitter Saturation Voltage	I_C = 50A I_B = 2.5A I_C = 100A I_B = 10A I_C = 50A I_B = 2.5A T_c = 100^oC I_C = 100A I_B = 10A T_c = 100^oC			1.4 2 1.4 2.1	V V V V
di_c/dt	Rate of Rise of on-state Collector Current	V_{CC} = 100V R_C = 0 I_{B1} = 5A T_p = 3µs T_c = 100^oC	180			A/µs
	INDUCTIVE LOAD	V_{CC} = 90V V_{clamp} = 125 V				
t_s	Storage time	I_C = 50A I_{B1} = 2.5A			2	µs
t_f	Fall Time	V_{BB} = - 5V L_C = 80µH			0.2	µs
t_c	Crossover Time	R_{B2} = 1 Ω T_c = 100^oC			0.35	µs
V_{CEW}	Maximum Collector Emitter Voltage without Snubber	V_{CC} = 90V I_{CWoff} = 150A V_{BB} = - 5V I_{B1} = 10A L_C = 30µH R_{B2} = 1Ω T_c = 125^oC	125			V

∗ Pulsed: Pulse duration = 3µs, duty cycle = 2 %

TO-3 (version S) MECHANICAL DATA

DIM.	mm			inch		
	MIN.	TYP.	MAX.	MIN.	TYP.	MAX.
A	11.00		13.10	0.433		0.516
B	1.47		1.60	0.058		0.063
C	1.50		1.65	0.059		0.065
D	8.32		8.92	0.327		0.351
E	19.00		20.00	0.748		0.787
G	10.70		11.10	0.421		0.437
N	16.50		17.20	0.649		0.677
P	25.00		26.00	0.984		1.023
R	4.00		4.09	0.157		0.161
U	38.50		39.30	1.515		1.547
V	30.00		30.30	1.187		1.193

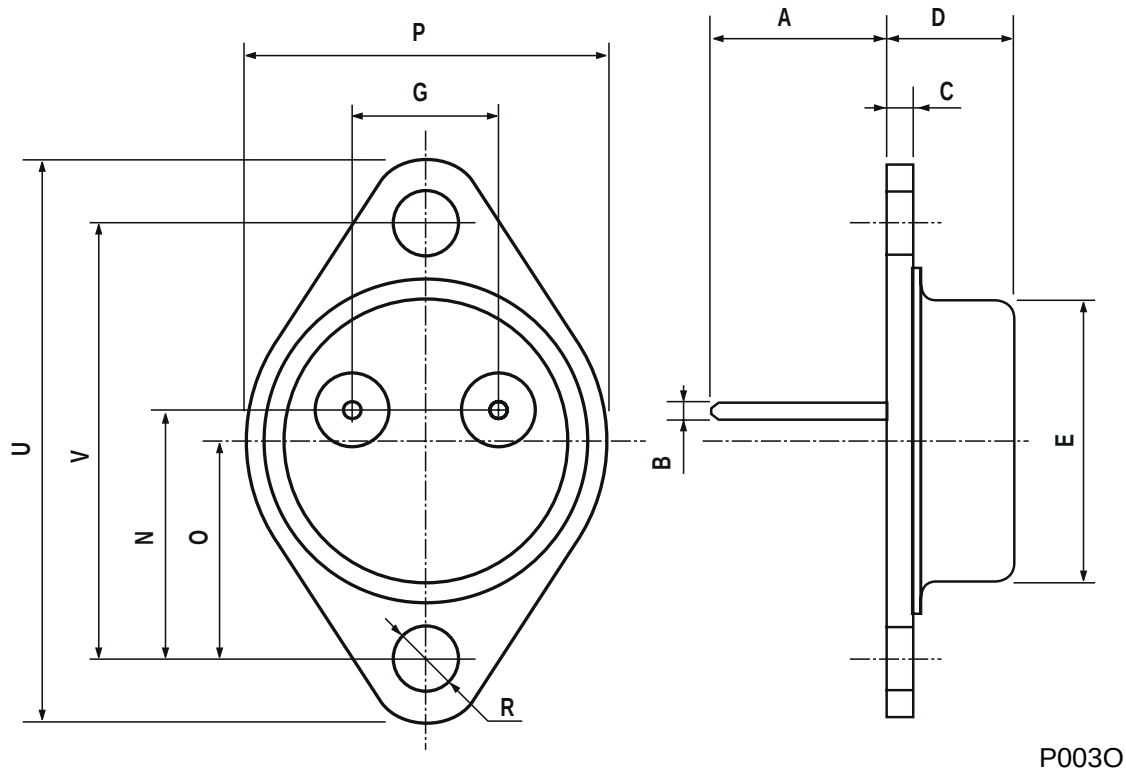

P003O

Information furnished is believed to be accurate and reliable. However, STMicroelectronics assumes no responsibility for the consequences of use of such information nor for any infringement of patents or other rights of third parties which may result from its use. No license is granted by implication or otherwise under any patent or patent rights of STMicroelectronics. Specification mentioned in this publication are subject to change without notice. This publication supersedes and replaces all information previously supplied. STMicroelectronics products are not authorized for use as critical components in life support devices or systems without express written approval of STMicroelectronics.

The ST logo is a trademark of STMicroelectronics

© 2003 STMicroelectronics – Printed in Italy – All Rights Reserved

STMicroelectronics GROUP OF COMPANIES

Australia - Brazil - Canada - China - Finland - France - Germany - Hong Kong - India - Israel - Italy - Japan - Malaysia - Malta - Morocco - Singapore - Spain - Sweden - Switzerland - United Kingdom - United States.

http://www.st.com