Ultrasonic Sensors

BUS M30E1-PPX-20/130-S92K
Order Code: BUS003A

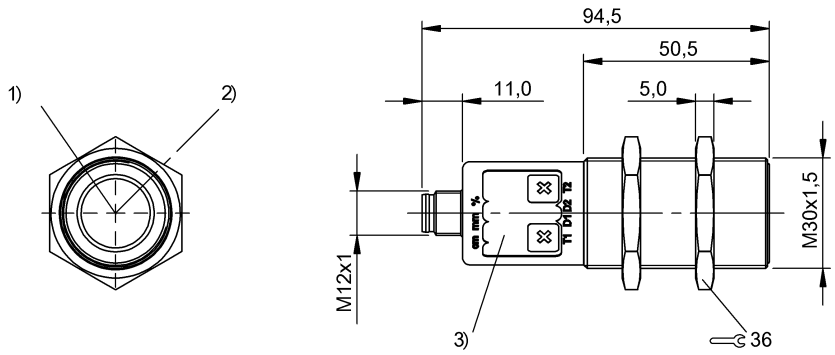

1) Ultrasonic transducer axis, 2) Exit direction 90° connector, 3) Display and control panel

Basic features

Application	Object detection
Approval/Conformity	cULus LISTED CE EAC WEEE
Operating mode	Reflectionlight scanner (switching point) Refl.light scanner (window) Retro-reflector
Series	M30E1

Display/Operation

Adjuster	Key (2x)
Setting	Multiplex speed Synchronization on/off Synchronous/Multiplex mode Segment displ. bright/dark/off Filter strength (10 levels) Response delay 0 to 20 s Foreground suppression range Multiplex sensor address Sensor calibration Temperature comp. on/off Measured value filter Hysteresis Detection range (3 levels) Teach-in mode display/button Factory setting (Reset) Operating mode Switching distance, 2 values Normally open/Normally closed Key disable on/off

Electrical connection

Connection	M12x1-Male, 5-pin
Polarity reversal protected	yes
Short-circuit protection	yes

Ultrasonic Sensors

BUS M30E1-PPX-20/130-S92K
Order Code: BUS003A

Electrical data

Current draw max.	80 mA
Hysteresis H max.	20 mm
Input function	Synchronization signal
Operating voltage Ub	9...30 VDC
Output current max.	200 mA
Rated operating voltage Ue DC	24 V
Switching frequency	8 Hz
Synchronization	internal, max. 10 sensors
Ultrasonic Frequency	200 kHz

Environmental conditions

Ambient temperature	-25...70 °C
IP rating	IP67
Storage temperature	-40...85 °C

Functional safety

MTTF (40 °C)	1483 a

Interface

Switching output	PNP normally open/normally closed (NO/NC)

Material

Housing material	Stainless steel PBT, TPU
Material sensing surface	PU foam/Epoxy resin/Glass

Mechanical data

Dimension	Ø 30 x 94.5 mm
Mounting part	Nut M30x1.5

Range/Distance

Range	200...2000 mm
Rated operating distance Sn	1300 mm
Repeat accuracy	± 0.15 %FS
Resolution	≤ 0.180 mm

Remarks

For additional information, refer to user's guide.
Order accessories separately.
Do not press key using a pointed tool.
Reference object for Sn: tube ø27mm. Max. range refers to the aligned plate.
The sensor is functional again after the overload has been eliminated.
For more information about MTTF and B10d see MTTF / B10d Certificate

Indication of the MTTF- / B10d value does not represent a binding composition and/or life expectancy assurance; these are simply experiential values with no warranty implications. These declared values also do not extend the expiration period for defect claims or affect it in any way.

Connector Drawings

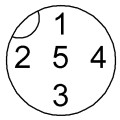

Wiring Diagrams

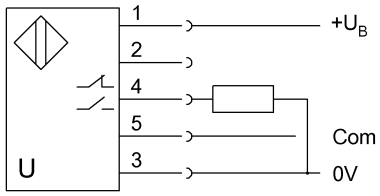

Technical Drawings

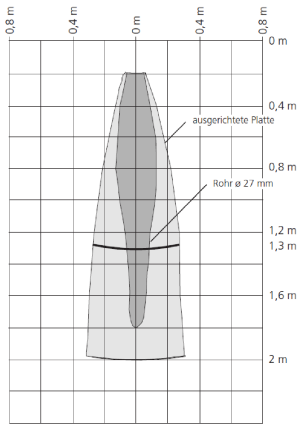

Help Views

