Ultrasonic Sensors

BUS M18M1-XA-03/025-S92G
Order Code: BUS0024

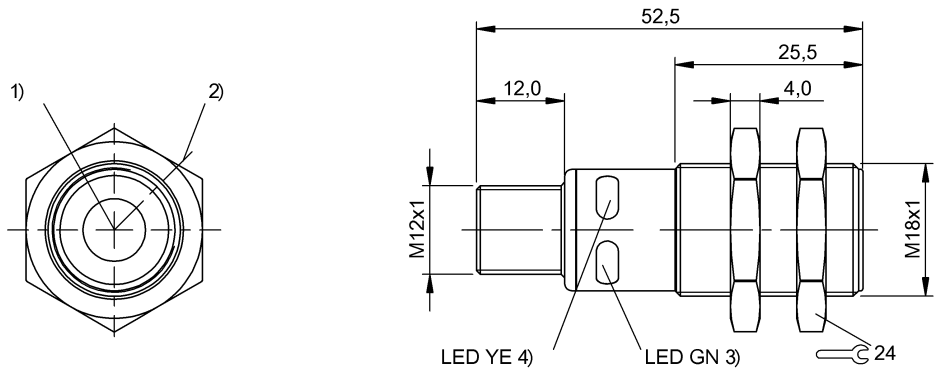

1) Ultrasonic transducer axis, 2) Exit direction 90° connector, 3) Operating voltage, 4) Output function

Basic features

Application	Distance measurement
Approval/Conformity	cULus LISTED CE EAC WEEE
Operating mode	Analog measurement (output curve)
Series	M18M1

Display/Operation

Adjuster	no

Electrical connection

Connection	M12x1-Male, 5-pin
Polarity reversal protected	yes
Short-circuit protection	yes

Electrical data

Current draw max.	40 mA
Input function	Output curve rising/falling Teach in the working range Factory setting (Reset) Synchronization on/off Synchronization signal
Load resistance RL min. (Analog V)	100 kOhm at UB > 15 V
Operating voltage Ub	15...30 VDC
Rated operating voltage Ue DC	24 V
Synchronization	internal, max. 10 sensors
Ultrasonic Frequency	320 kHz

Environmental conditions

Ambient temperature	-25...70 °C
IP rating	IP67
Storage temperature	-40...85 °C

Functional safety

MTTF (40 °C)	1134 a

Interface

Analog output	Analog, voltage 0…10 V
Output characteristic	linear rising/falling

Ultrasonic Sensors

BUS M18M1-XA-03/025-S92G
Order Code: BUS0024

Material

Housing material	Brass, nickel-plated PBT
Material sensing surface	PU foam/Epoxy resin/Glass
Surface protection	nickel-plated

Range/Distance

Range	30...350 mm
Rated operating distance Sn	250 mm
Repeat accuracy	± 0.15 %FS
Resolution	≤ 0.070 mm

Mechanical data

Dimension	Ø 18 x 52.5 mm
Mounting part	Nut M18x1

Connector Drawings

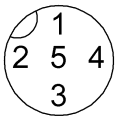

Wiring Diagrams

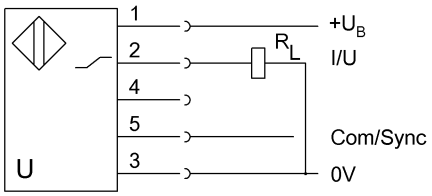

Technical Drawings

