Silicon NPN Power Transistors BU911

DESCRIPTION

·With TO-220C package
·DARLINGTON

APPLICATIONS

·Solenoid and relay drivers
·Motor control
·Electronic automotive ignition

PINNING

PIN	DESCRIPTION
1	Base
2	Collector;connected to mounting base
3	Emitter

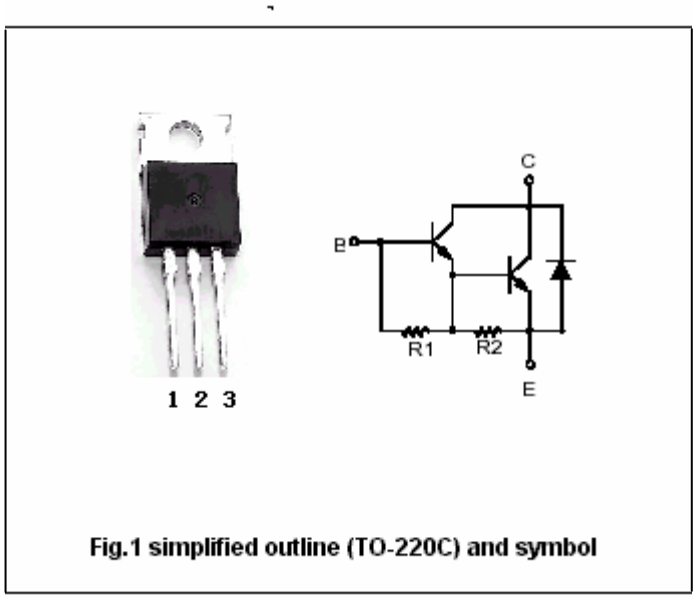

Fig.1 simplified outline (TO-220C) and symbol

Absolute maximum ratings (Ta=25□)

SYMBOL	PARAMETER	CONDITIONS	VALUE	UNIT
V_{CBO}	Collector-base voltage	Open emitter	450	V
V_{CEO}	Collector-emitter voltage	Open base	400	V
V_{EBO}	Emitter-base voltage	Open collector	5	V
I_C	Collector current (DC)		6	A
I_{CM}	Collector current (peak)		10	A
I_B	Base current		1	A
P_{tot}	Total power dissipation	T_C=25□	60	W
T_j	Max.operating junction temperature		150	□
T_{stg}	Storage temperature		-65~150	□

THERMAL CHARACTERISTICS

SYMBOL	PARAMETER	MAX	UNIT
$R_{th\ j\text{-}case}$	Thermal resistance junction case	2.08	□/W

Silicon NPN Power Transistors BU911

CHARACTERISTICS

Tj=25□ unless otherwise specified

SYMBOL	PARAMETER	CONDITIONS	MIN	TYP.	MAX	UNIT
$V_{CEO(SUS)}$	Collector-emitter sustaining voltage	I_C=0.1 A ;I_B=0;L=10mH	400			V
$V_{CEsat-1}$	Collector-emitter saturation voltage	I_C=2.5A ;I_B=50mA			1.8	V
$V_{CEsat-2}$	Collector-emitter saturation voltage	I_C=4A ;I_B=200mA			1.8	V
$V_{BEsat-1}$	Base-emitter saturation voltage	I_C=2.5A ;I_B=50mA			2.2	V
$V_{BEsat-2}$	Base-emitter saturation voltage	I_C=4A ;I_B=200mA			2.5	V
I_{CES}	Collector cut-off current	V_{CE} =450V; V_{BE}=0; T_C=125□			1.0 5.0	mA
I_{CEO}	Collector cut-off current	V_{CE} =400V; I_B=0			1.0	mA
I_{EBO}	Emitter cut-off current	V_{EB}=5V; I_C=0			5	mA
h_{FE}	DC current gain	I_C=3A ; V_{CE}=5V	500			
V_F	Diode forward voltage	I_F=4A			2.5	V

PACKAGE OUTLINE

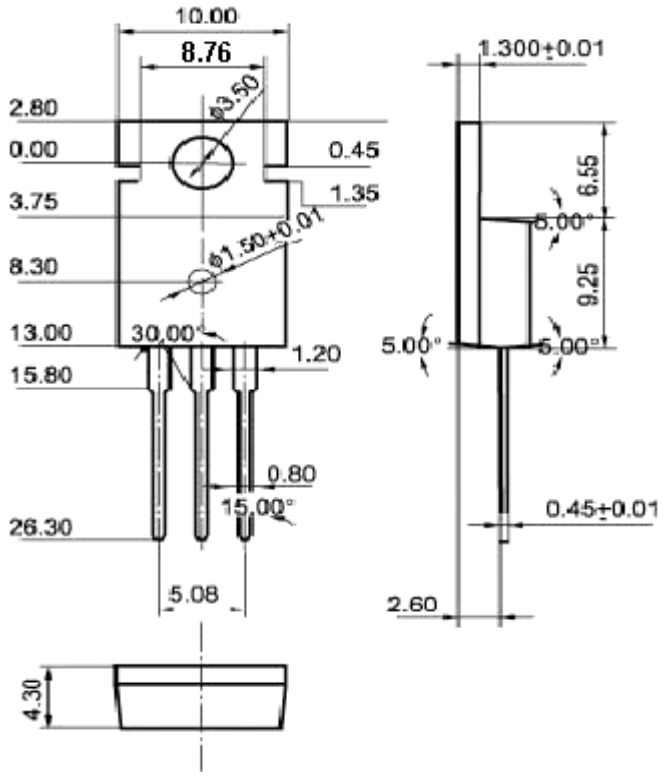

Fig.2 Outline dimensions (unindicated tolerance: 0.1mm)