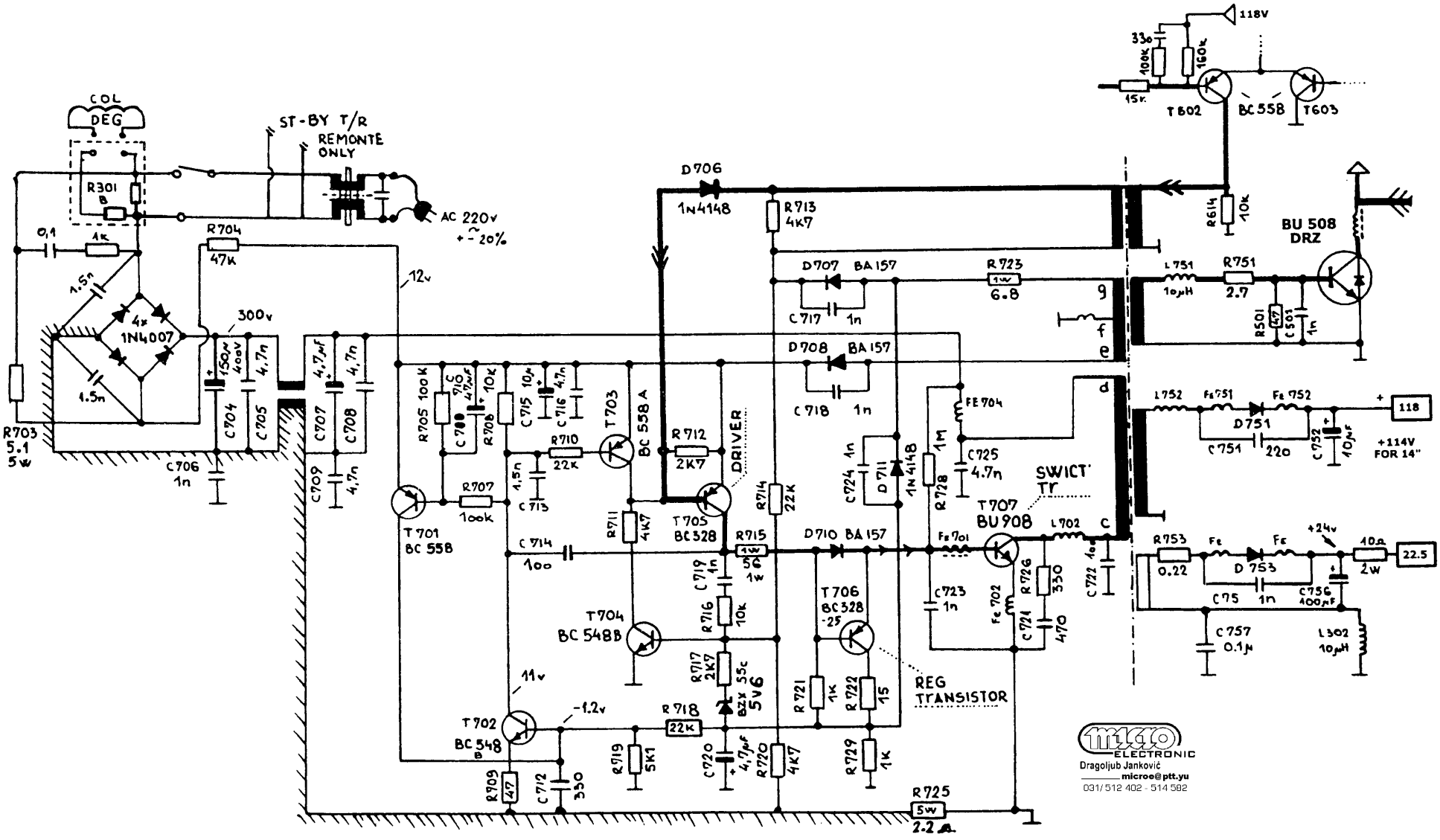
COL
DEG
R301
B
ST-BY T/R
REMONTE
ONLY
AC 220v
+ ~ 20%
0,1
1k
R704
47k
1.5n
4x
1N4007
300v
150µ
400V
4,7n
C704
C705
C706
1n
R703
5.1
5w
12v
4,7µF
C707
C708
C709
4,7n
R705 100k
C710
47µF
R708
10k
C715 10µ
C716 4,7n
R710
22k
T703
BC 558 A
R712
2K7
DRIVER
T705
BC328
R707
100k
T701
BC 558
C713
1,5n
R711
4K7
C714
100
R715
1w
56
1w
C719
1n
R716
10k
T704
BC 548B
R717
2K7
BZX 55c
5V6
11v
T702
BC 548
B
-1.2v
R718
22k
R719
5K1
C720
4,7µF
R720
4K7
R709
47
C712
330
R714
22K
D706
1N4148
R713
4K7
D707 BA157
C717
1n
D708 BA157
C718
1n
C724
1n
D711
1N4148
R728
1M
FE704
C725
4.7n
D710 BA157
T706
BC328
-25
R721
1k
R722
15
R729
1k
REG
TRANSISTOR
R725
5w
2.2Ω
C723
1n
Fe701
T707
BU908
SWICT
Tr
L702
C722
100
R726
330
Fe702
C721
470
R614
10k
118V
330
100k
160k
15k
T602
BC558
T603
BU 508
DRZ
L751
10µH
R751
2.7
R501
47
C501
1n
g
f
e
d
c
L752
Fe751
Fe752
D751
C751
220
C752
10µF
118
+114V
FOR 14"
R753
0.22
Fe
Fe
D753
C75
1n
+24v
C756
100µF
10Ω
2W
22.5
C757
0.1µ
L302
10µH
micro
ELECTRONIC
Dragoljub Janković
microe@ptt.yu
031/ 512 402 - 514 582