Resistive touch screen controller LSI series

4-wire Resistive Touch Screen Controller

BU21026MUV

General Description

BU21026MUV is a low power 4-wire resistive touch screen controller. BU21026MUV measures coordinates and touch pressures with a 12bit A/D converter. BU21026MUV has a digital filter for noise reduction.

Features

- 4-wire resistive touch screen controller
- Single 1.65V to 3.60V supply.
- Low standby current (0.8uA max)
- 12bit SAR A/D converter
- 2-wire serial interface
- Command base interface
- Digital filter
- Touch pressure measurement
- Auto power down control
- Built-in clock oscillation circuit

.

Applications

- Equipment with a built in user interface of 4-wire resistive touch screen
- Portable device such as smart phone, tablet, PDA.
- Digital still camera, digital video camera, portable TV.
- PC / PC peripheral equipment such as laptop PC, touch screen monitor, printer.

Key Specifications

■ Power supply voltage	1.65V to 3.60V
■ Temperature range	-30℃ to 85℃
■ Standby current	0.8uA (Max.)
■ Operating current	120uA (Typ.)
■ Coordinate resolution	12Bits

Package

	W(Typ) x D(Typ) x H(Max)
VQFN020V4040	4.00mm x 4.00mm x 1.00mm

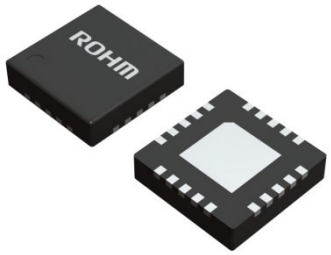

Typical Application Circuit(s)

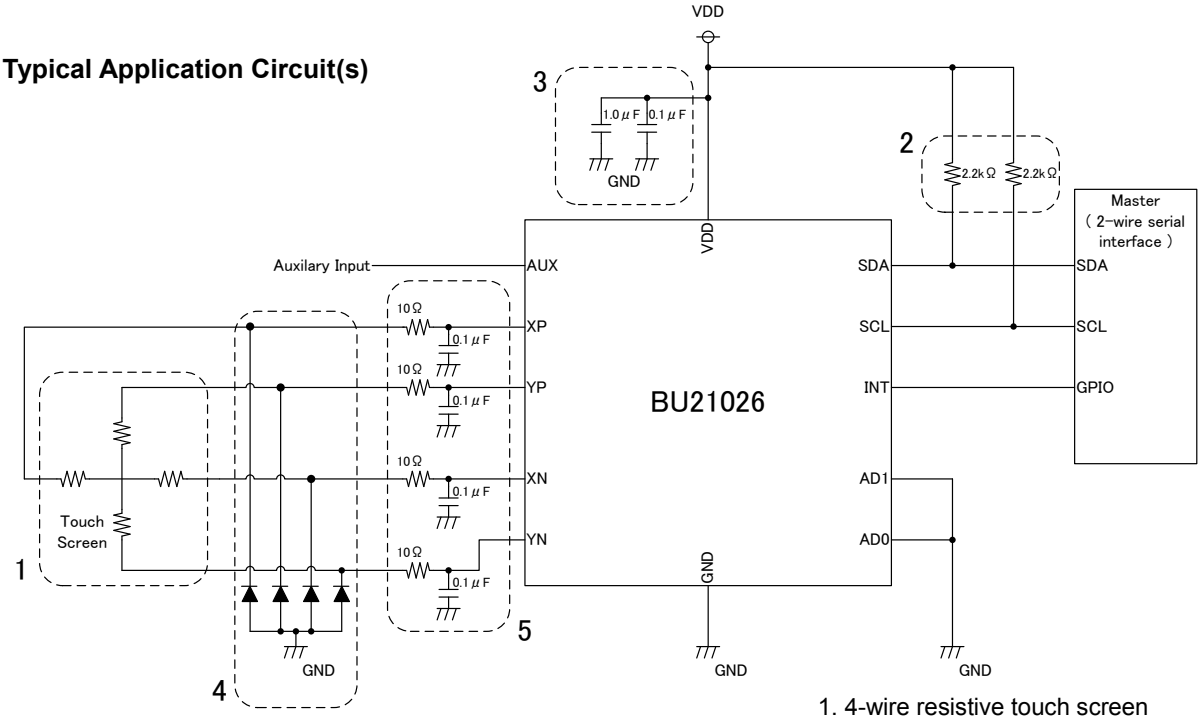

1. 4-wire resistive touch screen
2. Pull-up resistor for 2-wire serial interface
3. Bypass capacitors
4. Diodes for ESD protection
5. Low pass filter for noise reduction

○Product structure : Silicon monolithic integrated circuit ○This product has no designed protection against radioactive rays

© 2016 ROHM Co., Ltd. All rights reserved.

Contents

General Description 1
Features 1
Applications 1
Key Specifications 1
Package 1
Typical Application Circuit(s) 1
Contents 2
Pin Configuration(s) 3
Pin Description(s) 3
Equivalent circuit 3
Block Diagram(s) 4
Description of Block(s) 4
- Power on Reset 4
- A/D Converter 4
- Touch Screen I/F 4
- Touch Detection 5
- Digital Filter 5

Absolute Maximum Ratings 6
Thermal Resistance(Note 1) 6
Recommended Operating Conditions 6
Electrical Characteristics 6
Power on Reset Timing Chart 7
2-wire Serial Interface Timing Chart 7
2-wire Serial Interface 8
- Start Condition 8
- Stop Condition 8
- Data Transfer 8
- Acknowledge Bit (sending) 8
- Acknowledge Bit (receiving) 8
- Address Byte 8
- Command Byte 9
- Write Protocol 11
- Read Protocol 12

Operation 13
- Position Detection of Touch Screen 13
- Touch Pressure Measurement 13
- A/D Conversion Time 14
- A/D Sampling Time with 2-wire Serial Interface 14

Operational Notes 15
Ordering Information 17
Marking Diagrams 17
Physical Dimension, Tape and Reel Information 18
Revision History 19

© 2016 ROHM Co., Ltd. All rights reserved.

Pin Configuration(s)

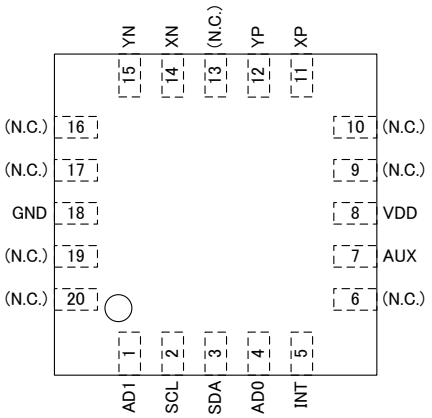

TOP VIEW

Pin Description(s)

Pin No.	Pin Name	I/O	Function	Figure
1	AD1	I	Slave address bit1 input	A
2	SCL	I/O	Serial clock	B
3	SDA	I/O	Serial data	B
4	AD0	I	Slave address bit0 input	A
5	INT	O	Interrupt output. Pin polarity is active low.	A
6	-	-	(N.C.)	-
7	AUX	I	Auxiliary input	C
8	VDD	-	Power supply	-
9	-	-	(N.C.)	-
10	-	-	(N.C.)	-
11	XP	I/O	Screen interface	C
12	YP	I/O	Screen interface	C
13	-	-	(N.C.)	-
14	XN	I/O	Screen interface	C
15	YN	I/O	Screen interface	C
16	-	-	(N.C.)	-
17	-	-	(N.C.)	-
18	GND	-	Ground	-
19	-	-	(N.C.)	-
20	-	-	(N.C.)	-

Equivalent circuit

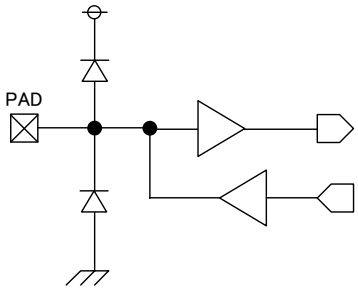

Figure. A

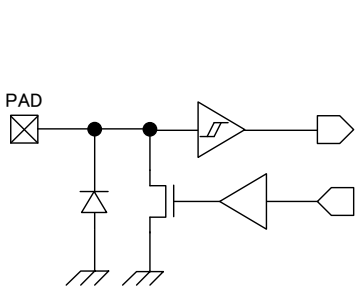

Figure. B

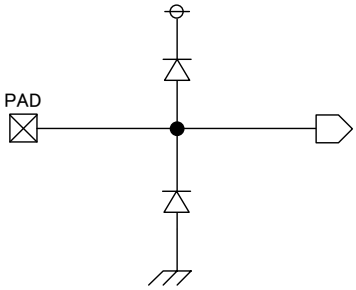

Figure. C

© 2016 ROHM Co., Ltd. All rights reserved.

Block Diagram(s)

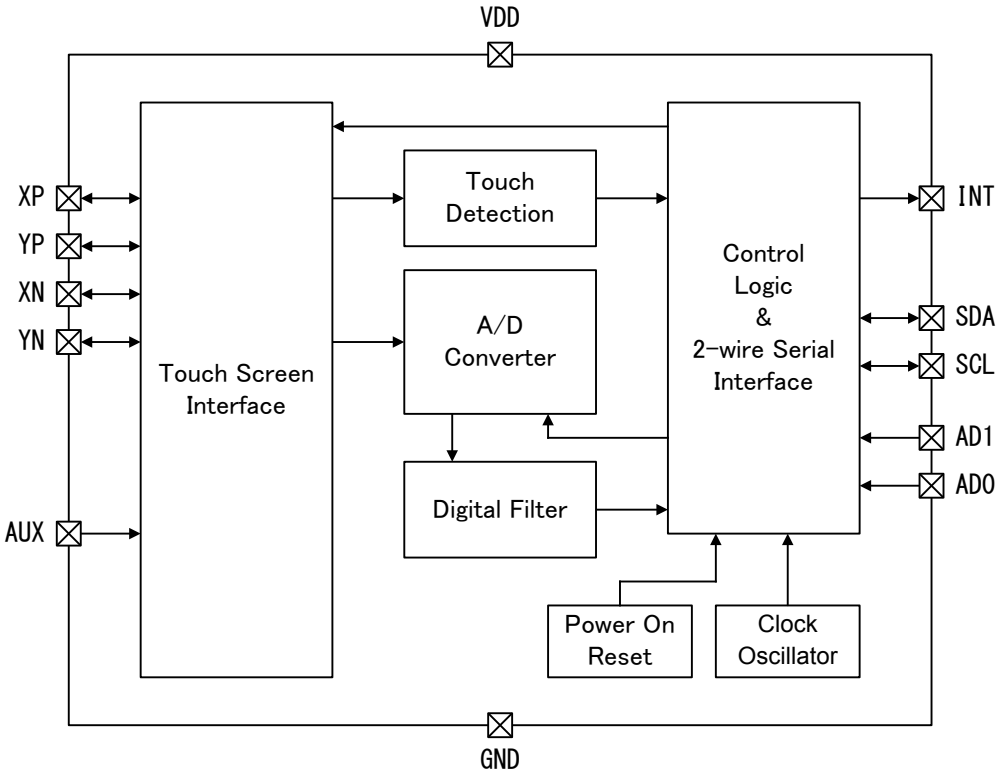

Description of Block(s)

Power on Reset

BU21026MUV requests that the Power on Reset Timing should be observed. If the Power on Reset Timing not be observed, BU21026MUV may wakeup with a random state. The touch detection and 2-wire serial interface is enabled after taking the device ready time.

A/D Converter

BU21026MUV has a 12-bit Successive Approximation Resistor (SAR) Analog to Digital (A/D) converter. This A/D converter is used for measuring X and Y position and Auxiliary input voltage. Output format is in straight binary as shown in below table.

A/D Convertor Output Format

INPUT VOLTAGE	OUTPUT
(VREF - 1.5LSB) ~ VREF	FFFh
(VREF - 2.5LSB) ~ (VREF - 1.5LSB)	FFEh
(VREF - 3.5LSB) ~ (VREF - 2.5LSB)	FFDh
:	:
1.5LSB ~ 2.5LSB	002h
0.5LSB ~ 1.5LSB	001h
0 ~ 0.5LSB	000h

Note: VREF = VREFP – VREFN, LSB = VREF / 4095

Touch Screen I/F

A touch screen interface is consisted many switches. These switches are used for the driving screen voltage and selection an input of the A/D converter. State of these switches is selected by a command that sent from the master.

© 2016 ROHM Co., Ltd. All rights reserved.

Touch Detection

A touch detection function of BU21026MUV is automatically enabled after wakeup. BU21026MUV inform that touch screen is touched or not by INT pin when touch detection is enabled. Output level of INT becomes low during screen is touched. In this state, XP pin is pulled-up high by pull-up resistor (R_{PU}) and YN pin is connected to GND. A resistance of R_{PU} is selectable from either 50 kohm (default) or 90 kohm by the setup command. When the screen isn't touched, XP is connected to VDD trough the pull-up resistor. When the screen is touched, XP is connected to GND trough the screen and BU21026MUV detect touch.

When a received command is not setup (1011), the touch detection is disabled and R_{PU} is disconnected from XP pin. And output level of INT is fixed high or low by each command (see Table 3 for details about operation code).

When BU21026MUV receives software reset command (0101), touch detection is enabled after the 2nd acknowledge timing.

When BU21026MUV receives A/D conversion with PD=0 command touch detection is enabled after an A/D conversion is finished.

When BU21026MUV receives a driving screen voltage or an A/D conversion with PD=1 command, touch detection is not enable automatically. A method for re-enable the touch detection is sending new command that return to enable touch detection. The set power command is almost same as an A/D conversion command.

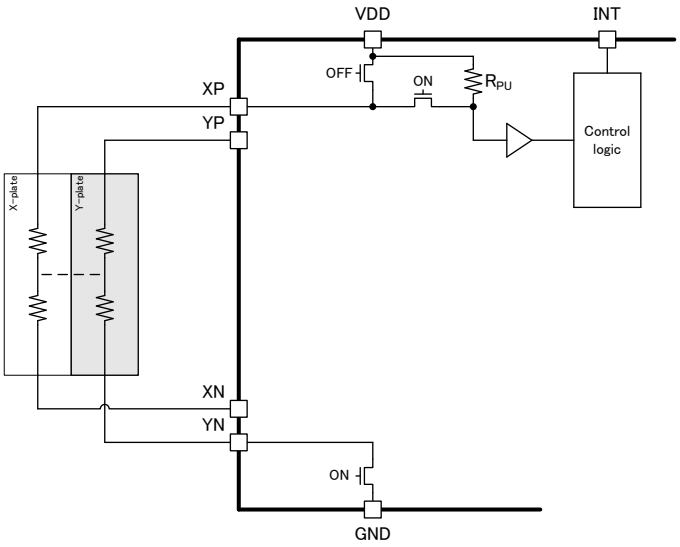

Touch Detection Circuit

Digital Filter

BU21026MUV has a Median Average Filter (MAF) as a digital filter for noise reduction. When the MAF is enabled, BU21026MUV operates A/D conversion 7 times and stores converted data. Next, these stored data are sorted. An output data of MAF is an average value of middle three values of the sorted data. An abnormal value becomes difficult to affect the results. So noise reduction performance of MAF is higher than one of normal average filter. When the MAF is disabled, BU21026MUV operates A/D conversion one times and output the converted data The MAF is enabled in defaults and is changed by the setup command.

© 2016 ROHM Co., Ltd. All rights reserved.

Absolute Maximum Ratings

PARAMETER	SYMBOL	RATING	UNIT
Power supply voltage	VDD	-0.3 to 4.5	V
Input voltage	VIN	-0.3 to VDD+0.3	V
Storage temperature range	Tstg	-50 to 125	℃

Caution: Operating the IC over the absolute maximum ratings may damage the IC. The damage can either be a short circuit between pins or an open circuit between pins and the internal circuitry. Therefore, it is important to consider circuit protection measures, such as adding a fuse, in case the IC is operated over the absolute maximum ratings.

Thermal Resistance*(Note 1)*

PARAMETER	SYMBOL	Thermal Resistance (Typ)		UNIT
		1s*(Note 3)*	2s2p*(Note 4)*	
VQFN020V4040				
Junction to Ambient	θ_{JA}	153.9	37.4	°C/W
Junction to Top Characterization Parameter*(Note 2)*	Ψ_{JT}	13	7	°C/W

*(Note 1)*Based on JESD51-2A(Still-Air)
*(Note 2)*The thermal characterization parameter to report the difference between junction temperature and the temperature at the top center of the outside surface of the component package.
*(Note 3)*Using a PCB board based on JESD51-3.

Layer Number of Measurement Board	Material	Board Size
Single	FR-4	114.3mm x 76.2mm x 1.57mmt

Top	
Copper Pattern	Thickness
Footprints and Traces	70µm

*(Note 4)*Using a PCB board based on JESD51-5, 7.

Layer Number of Measurement Board	Material	Board Size	Thermal Via*(Note 5)*	
			Pitch	Diameter
4 Layers	FR-4	114.3mm x 76.2mm x 1.6mmt	1.20mm	Φ0.30mm

Top		2 Internal Layers		Bottom	
Copper Pattern	Thickness	Copper Pattern	Thickness	Copper Pattern	Thickness
Footprints and Traces	70µm	74.2mm x 74.2mm	35µm	74.2mm x 74.2mm	70µm

(Note 5) This thermal via connects with the copper pattern of all layers..

Recommended Operating Conditions

PARAMETER	SYMBOL	MIN.	TYP.	MAX.	UNIT
Power supply voltage	VDD	1.65	3.00	3.60	V
Operating temperature range	Tj	-30	25	85	℃

Electrical Characteristics (Unless otherwise specified Tj=25[℃], VDD=3.00[V], GND=0.00[V])

PARAMETER	SYMBOL	MIN.	TYP.	MAX.	UNIT	CONDITION
Low-level input voltage	VIL	-0.3	-	0.3xVDD	V	
High-level input voltage	VIH	0.7xVDD	-	VDD+0.3	V	
Low-level output voltage	VOL	0	-	0.2	V	IL = 3.6mA
High-level output voltage	VOH	VDD-0.2	-	VDD	V	IL = -3.6mA
A/D converter resolution	AD	-	-	12	Bits	Programmable 8/12 bits
Differential non-linearity error	DNL	-3.5	-	3.5	LSB	
Integral non-linearity error	INL	-5	-	5	LSB	
Internal clock frequency	Freq	2.6	4.0	5.1	MHz	
Active current	Idd	-	120	450	uA	8.2kSPS (operation)
Standby current	Ist	-	-	0.8	uA	After reset releasing

© 2016 ROHM Co., Ltd. All rights reserved.

Power on Reset Timing Chart

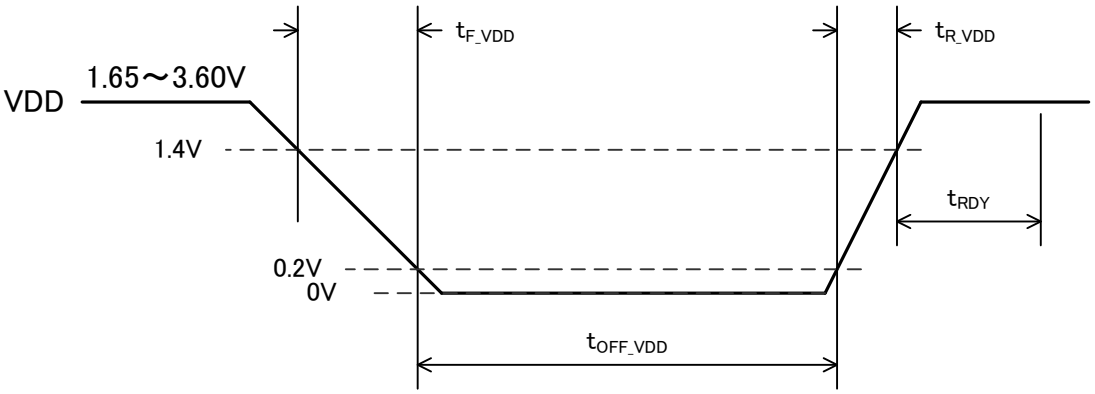

(Unless otherwise specified Tj=25[℃], VDD=3.00[V], GND=0.00[V])

PARAMETER	SYMBOL	RATING			UNIT	CONDITION
		MIN.	TYP.	MAX.		
Off period of VDD	t_{OFF_VDD}	0.3	-	-	s	
Rise time for VDD	t_{R_VDD}	10	-	100	us	
Fall time for VDD	t_{F_VDD}	0.5	-	-	ms	
Ready time for device	t_{RDY}	-	-	2	ms	

2-wire Serial Interface Timing Chart

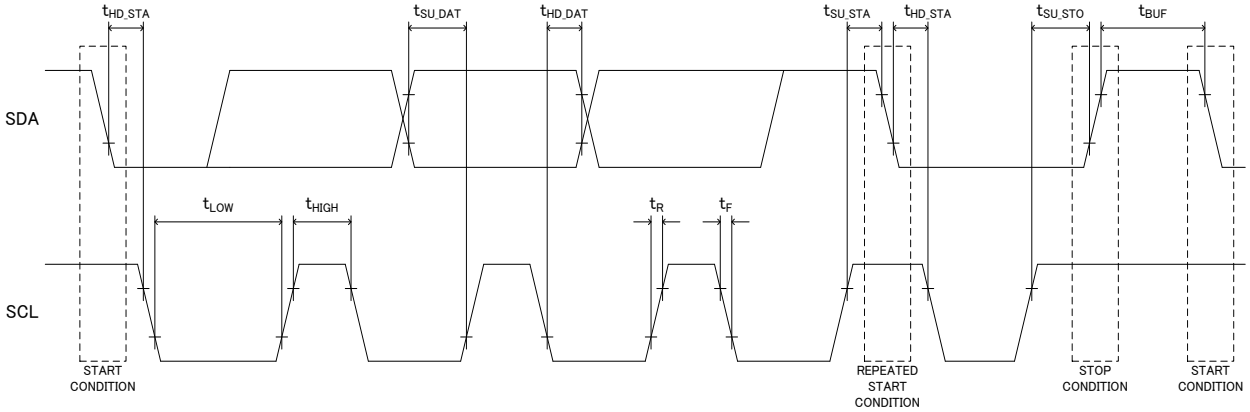

(Unless otherwise specified Tj=25[℃], VDD=3.00[V], GND=0.00[V])

PARAMETER	SYMBOL	RATING			UNIT	CONDITION
		MIN.	TYP.	MAX.		
SCL clock frequency	f_{SCL}	-	-	400	KHz	
Hold time for (repeated) START condition	t_{HD_STA}	0.6	-	-	us	
Low period of SCL	t_{LOW}	1.3	-	-	us	
High period of SCL	t_{HIGH}	0.6	-	-	us	
Setup time for repeated START condition	t_{SU_STA}	0.6	-	-	us	
Data hold time	t_{HD_DAT}	0	-	0.9	us	
Data setup time	t_{SU_DAT}	100	-	-	ns	
Rise time for both SCL and SDA	t_R	20	-	300	ns	
Fall time for both SCL and SDA	t_F	20	-	300	ns	
Setup time for STOP condition	t_{SU_STO}	0.6	-	-	us	
Bus free time between a STOP and START condition	t_{BUF}	1.3	-	-	us	

© 2016 ROHM Co., Ltd. All rights reserved.

2-wire Serial Interface

BU21026MUV supports a 2-wire serial interface a device that controls transfer is called a master. A device that controlled by the master is called a slave. BU21026MUV is a slave device.
BU21026MUV has a write protocol and a read protocol. The write protocol consists of a start condition, an address byte, a command byte, and a stop condition. The read protocol consists of a start condition, an address byte, one or two data bytes, and a stop condition.

Start Condition

BU21026MUV recognizes as a start condition that falling edge of SDA while SCL is set “H”. If the start condition is received, BU21026MUV will be in the state that can be transfer and received data. When the start condition is fulfilled, BU21026MUV recognize the (repeated) start condition also in data transfer.

Stop Condition

BU21026MUV recognizes as a stop condition that rising edge of SDA while SCL is set “H”. If the stop condition is received, BU21026MUV will be in the state that cannot be transfer and received data.

Data Transfer

Data is transferred with the most significant bit (MSB) first and 8-bits long. Each byte has to be followed by an acknowledge bit. A Timing of SDA data receiving is rising edge of SCL. A state of SDA can only change when SCL set to “L”. If SDA is changed while SCL is set “H”, a start or stop condition will recognized by BU21026MUV.

Acknowledge Bit (sending)

After the master sends a byte to BU21026MUV, an acknowledge bit is used in order that BU21026MUV may return a response to the master. At this time, the master needs to set SDA into a high impedance state. When BU21026MUV receives effectively data, it sets SDA to “L” (ACK). Otherwise SDA is set to “H” (NACK).

Acknowledge Bit (receiving)

After the master receives a byte from BU21026MUV, an acknowledge bit is used for judgment of whether BU21026MUV continues data transfer. In this case, the master needs to set SDA. When SDA is set to “L” (ACK), BU21026MUV continues data transfer. When SDA is set to “H” (NACK), BU21026MUV ends data transfer.

Address Byte

BU21026MUV recognizes one byte data as an address byte after a start condition. The address byte is consisted a 7-bit slave address and a read-write bit. If a received slave address is matched with its one, BU21026MUV issues an acknowledge to the master. Otherwise BU21026MUV doesn’t issue an acknowledge to the master and stops data transfer. Upper 5 bits of the 7-bit slave address are “10010”. And lower 2 bits of the 7-bit slave address are programmable by AD1 and AD0. The read-write bit (R/WB) determines direction. When it is ‘1’, the master reads from BU21026MUV. When it is ‘0’, the master writes to BU21026MUV.

Table 1. Address Byte

BIT	MSB 7	6	5	4	3	2	1	LSB 0
NAME	S6	S5	S4	S3	S2	S1	S0	R/WB
SLAVE	1	0	0	1	0	AD1	AD0	-

BIT 7-1 : S6-0
Slave address
BIT 0 : R/WB
0: The master writes to BU21026MUV
1: The master reads from BU21026MUV.

© 2016 ROHM Co., Ltd. All rights reserved.

Command Byte

BU21026MUV has a command byte after the address byte. Upper 4 bits of the command byte select an operation code. And lower 4 bits of the command byte select an operand. Effects of the operands are changed by the operation code.

Table 2. Command Byte

BIT	MSB 7	6	5	4	3	2	1	LSB 0
NAME	C3	C2	C1	C0	O3	O2	O1	O0

BIT 7-4 : C3-0

Operation code: It is select an operation of the command. Detail is shown in Table 3.

BIT 3-0 : O3-0

Operand: It has 3 types. The operand type is selected by the operation code. When the operation code is not “0101” or “1011”, the option type is 0. When it is “1011”, the option type is 1. When it is “0101” option type is 2. Detail is shown in Table 3 and 4.

Table 3. Operation Code Function

C3	C2	C1	C0	FUNCTION	AD-INPUT	X-DRIVER	Y-DRIVER	INT POLARITY	OPERAND TYPE
0	0	0	0	Set Power	OFF	OFF	OFF	H	0
0	0	0	1	Reserved	-	-	-	-	-
0	0	1	0	Measure AUX	AUX	OFF	OFF	H	0
0	0	1	1	Reserved	-	-	-	-	-
0	1	0	0	Set Power	OFF	OFF	OFF	H	0
0	1	0	1	Software Reset	OFF	OFF	OFF	H	2
0	1	1	0	Reserved	-	-	-	-	-
0	1	1	1	Reserved	-	-	-	-	-
1	0	0	0	Drive X	OFF	ON	OFF	L	0
1	0	0	1	Drive Y	OFF	OFF	ON	L	0
1	0	1	0	Drive Z	OFF	XN-ON	YP-ON	L	0
1	0	1	1	Setup	Keep	Keep	Keep	Keep	1
1	1	0	0	Measure X	YP	ON	OFF	L	0
1	1	0	1	Measure Y	XP	OFF	ON	L	0
1	1	1	0	Measure Z1	YN	XN-ON	YP-ON	L	0
1	1	1	1	Measure Z2	XP	XN-ON	YP-ON	L	0

Set Power (0000, 0100)

This code is used for returning to a state for touch detection without A/D conversion after sending screen drive command. After this command, A/D converted data is set to 0.

Software Reset (0101)

BU21026MUV resets an A/D converted data, setup settings, and state of analog blocks to the initial state. If BU21026MUV receives this code during an A/D conversion, the A/D conversion is stopped.

Drive X (1000), Drive Y (1001), Drive Z (1010)

BU21026MUV starts driving screen voltage by each code. PD is not effective. So, Driving is continuous until reserving another command that changes state of driving screen voltage.

Measure AUX (0010), Measure X (1100), Measure Y (1101), Measure Z1 (1110), Measure Z2 (1111)

BU21026MUV starts driving screen voltage and A/D conversion. A PD of operand set, state of BU21026MUV after A/D conversion is finished.

Setup (1011)

The setup command has a special operand (type is 1). The operand has MAF and pull-up resistor settings. Detail is shown in Table 4.

© 2016 ROHM Co., Ltd. All rights reserved.

Table 4.Operands of Each Type

OPERAND TYPE	O3	O2	C1	C0
0	X	PD	M	X
1	L1	L0	MAF	PU90
2	X	X	X	X

Operand Type 0

O3 : X

Don’t care

O2 : PD

Power down setting.

0 : The analog blocks off and touch detection is enable automatically after A/D conversion is finished.

1 : The analog blocks keep measuring state after A/D conversion is finished.

O1 : M

A/D comversion mode setting.

0 : The resolution of A/D conversion is 12-bit. The Conversion clock frequency is 1MHz.

1 : The resolution of A/D conversion is 8-bit. The conversion clock frequency is 2MHz

O0 : X

Don’t care

Operand Type 1

O3 -2: L1-0

Fixed. Must write “00”.

O1 : MAF

Median Average Filter (MAF) Setting

0 : MAF is enabled (default).

1 : MAF is disabled.

O0 : PU90

Pull-up resistor setting.

0 : 50 kohm (default).

1 : 90 kohm

Operand Type 2

O3 -0: X

Don’t care

© 2016 ROHM Co., Ltd. All rights reserved.

Write Protocol

An command write is started in BU21026MUV when the master sends the start condition, the slave address of BU21026MUV, and zero in bit 0(8th bit) for writing, as shown in Table 1. If the slave address is matched with its own, BU21026MUV issues an acknowledge to the master. When the master receives the acknowledge from BU21026MUV, the master send the command byte. When BU21026MUV received next 8 bits, it issues another acknowledge to the master. After the acknowledge is received by the master, the master sends the stop or repeated start condition for ending write.

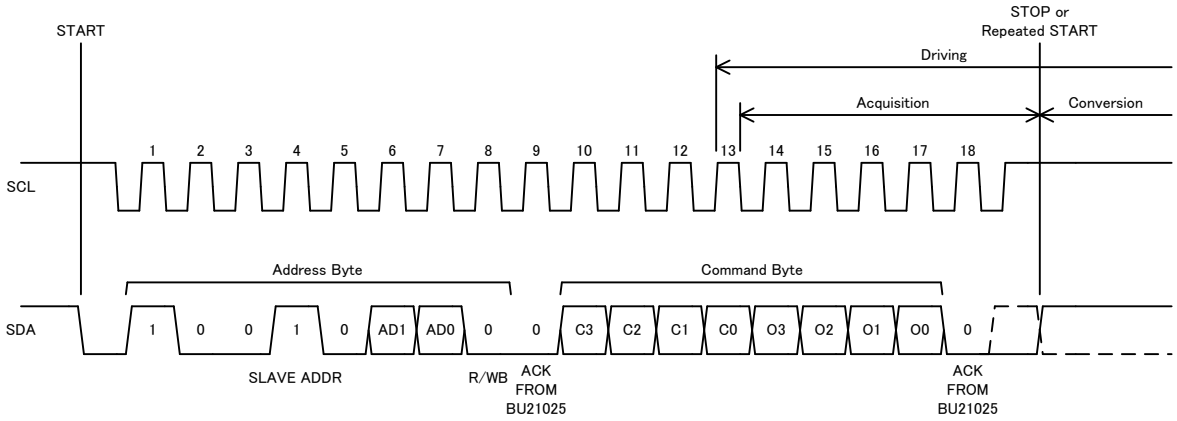

Figure 1. Write Protocol

If a receiving command in BU21026MUV is not the software reset or setup, BU21026MUV starts driving screen voltage when C0 is latched by rising edge of SCL. Next, if the received type of operation code is measurement, BU21026MUV starts acquisition in A/D converter when next falling edge of SCL. BU21026MUV stops acquisition and starts A/D conversion when BU21026MUV receive the stop or repeated start condition.

When BU21026MUV receives a command other than software reset during the A/D conversion, the command is ignored. And if the command is ignored, BU21026MUV doesn't return an acknowledge at the ACK timing behind the command byte. (18th timing in Figure. 1)

© 2016 ROHM Co., Ltd. All rights reserved.

Read Protocol

A data read is started in BU21026MUV when the master sends the start condition, the slave address of BU21026MUV, and one in bit 0(8th bit) for reading, as shown in Table 1. If the slave address is matched with its own, BU21026MUV issues an acknowledge to the master. Next, BU21026MUV send upper 8-bit (D11-4) of an A/D converted 12-bit data as data byte 1 and wait an acknowledge from the master. After receiving the acknowledge, the data byte 2 is sent. Upper 4 bits of it are lower 4 bits (D3-0) of the A/D converted 12-bit data, and lower 4 bits of it are all zero. In next acknowledge timing, the master send a not-acknowledge and the stop or repeated start condition for ending read. In the last acknowledge timing, BU21026MUV doesn't check the acknowledge and stop sending data. So if the master send an acknowledge and continue reading a byte, the read data become 0xFF. In the 8-bit mode, all of an A/D converted 8-bit data is in the data byte 1. So, the master doesn't need to read the data byte 2.

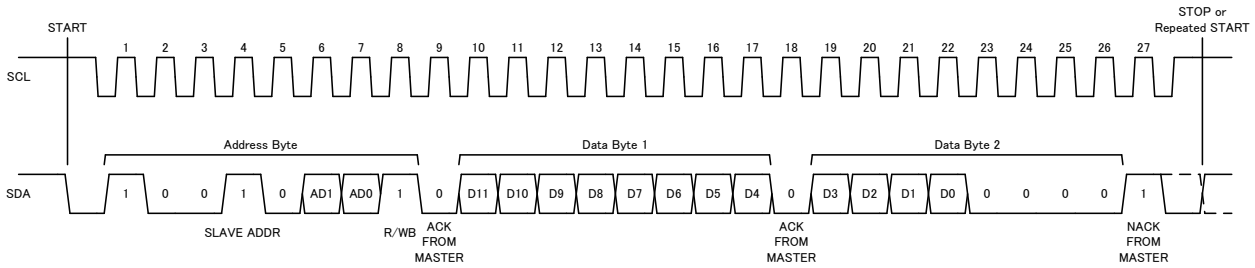

Figure 2. Read Protocol

If an A/D conversion is not finished until falling edge SCL after first acknowledge timing with read mode, SCL pin is stretched by BU21026MUV.In this state, SCL pin is forced to low by BU21026MUV and SDA value is invalid data. This state is ended when the A/D conversion is finished. After this state end, the master can control the SCL line and read converted data.

With stretch function, the master can access immediately after sending a conversion command. If performance of an A/D conversion is needed, the master send the read command after the A/D conversion is finished. Detail of a A/D conversion time is shown in Table 5.

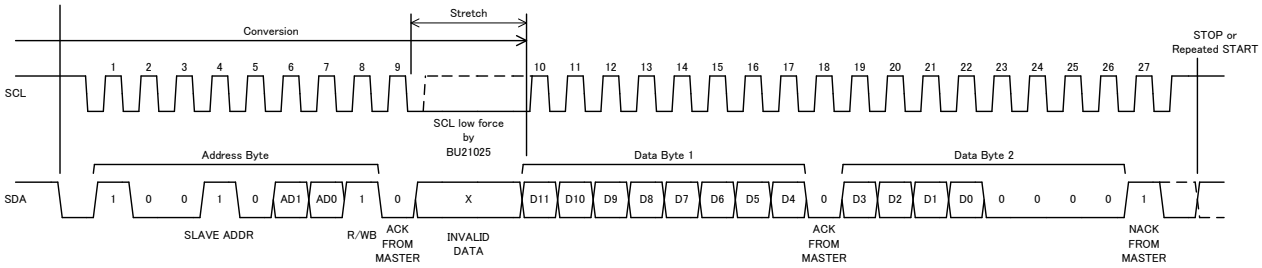

Figure 3. Read with Stretch

© 2016 ROHM Co., Ltd. All rights reserved.

Operation

Position Detection of Touch Screen

The 4-wire resistive touch screen is mainly constituted in two resistive plates, X and Y. If screen is pressed, these 2 plates are connected.

A position of touch screen is detected by applying voltage to one plate and measuring voltage of another plate. This measurement voltage is divided by touch position. In X-position detection, X-plate is applied voltage. And Voltage of Y-plate is measured. In Y-position detection, Y-plate is applied voltage. And Voltage of Y-plate is measured. The master needs to detection 2 times for detecting X and Y position

When screen is not touched, a measuring plate is high impedance from another plate. So, it can't get voltage. And a value of the A/D conversion became unknown. If unknown values are used for calculating the coordinates, the coordinates will not show touch points. So it is require to filter unknown values when the calculate coordinates.

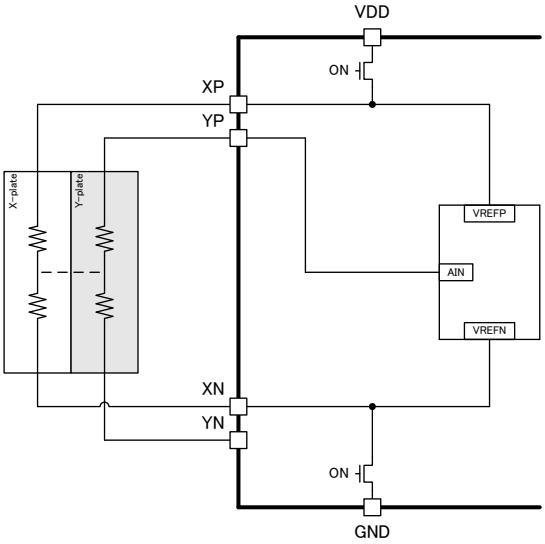

Figure 4. X-Position Detection Mode

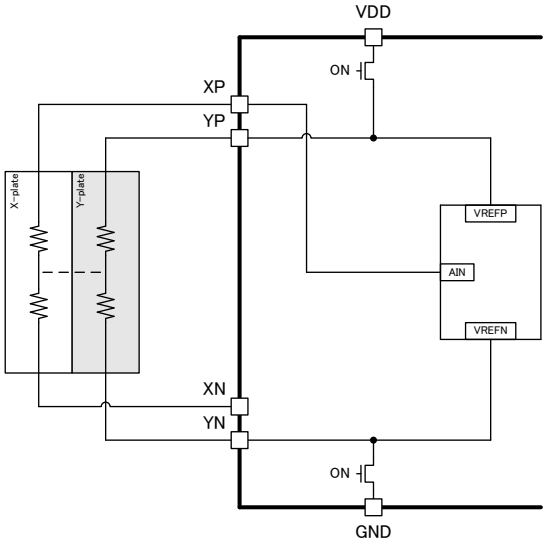

Figure 5. Y-Position Detection Mode

Touch Pressure Measurement

These are two methods for measuring touch resistance. The first method requires that a resistance of X-plate ($R_{X\text{-}plate}$) is known. In this method, the calculation of touch resistance (R_{TOUCH}) needs X position and 2 additional measurement data (Z_1 and Z_2) that shown in Figure 6 and 7. The equation is as follows,

$$R_{TOUCH} = R_{X\text{-}plate} \cdot \frac{X_{postion}}{4096}\left(\frac{Z_2}{Z_1} - 1\right)$$

The second method requires that both resistance of X-plate and resistance of Y-plate ($R_{Y\text{-}plate}$) are known. In this method, the calculation of R_{TOUCH} needs X and Y position and Z1. The equation is as follows,

$$R_{TOUCH} = \frac{R_{X\text{-}plate} \cdot X_{position}}{4096} \cdot \left(\frac{4096}{Z_1} - 1\right) - R_{Y\text{-}plate} \cdot \left(1 - \frac{Y_{position}}{4096}\right)$$

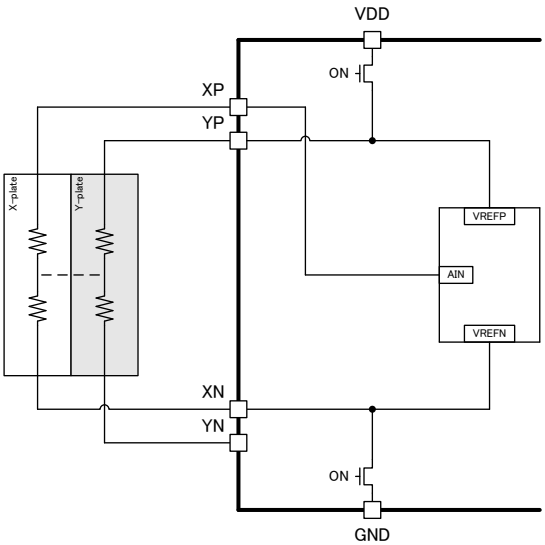

Figure 6. Z1-Position Detection Mode

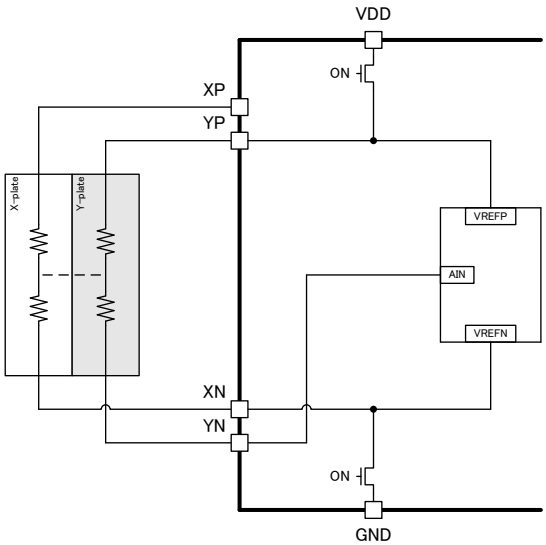

Figure 7. Z2-Position Detection Mode

© 2016 ROHM Co., Ltd. All rights reserved.

A/D Conversion Time

When MAF is disabled, an A/D conversion takes 66 internal core clocks (CCLK) with 12-bit mode and 38 CCLK with 8-bit mode. When MAF is enabled, it takes 476 CCLK with 12-bit mode and 244 CCLK with 8-bit mode. In MAF mode, the number of sampling becomes 7. So the A/D conversion cycles become large.

The A/D conversion clocks and time are shown in Table 5. The number of CCLK and time are counted from a stop or repeated start condition after sending a conversion command. In this table, the time is calculated by CCLK is 4MHz in typically.

Table 5. A/D Conversion Time (CCLK = 4MHz)

MAF	MODE	NUMBER OF CCLK	TIME [us]
Enable	12-bit	476	119.0
	8-bit	244	61.0
Disable	12-bit	66	16.5
	8-bit	38	9.5

A/D Sampling Time with 2-wire Serial Interface

The master need to send a conversion command and a read command for getting an A/D converted data. So, a throughput rate is affected by 2-wire serial interface frequency. Each write cycle takes 20 SCL and each read cycle takes 29 SCL (12-bit mode) or 20 SCL (8-bit mode). Note that each a start and a stop condition take 1 SCL in this count.

When the 2-wire serial interface frequency is 400 KHz, one period become 2.5us. Each A/D sampling time takes 241.5us (49 x 2.5 us + 119.0 us) with 12-bit mode and MAF. So, a control throughput rate becomes 4.14 kSPS. In MAF mode, BU21026MUV operates A/D conversion 7 times. It means that an operation throughput rate is increased 7 times. It becomes 28.99 kSPS.

Table 6. Control and Operation Throughput

2-WIRE SERIAL INTERFACE FREQENCY	MAF	MODE	NUMBER OF SCL	A/D CONVERSION TIME [us]	CYCLE TIME [us]	CONTROL THROUGHPUT [kSPS]	OPERATION THROUGHPUT [kSPS]
100 kHz (10us period)	Enable	12-bit	49	119.0	609.0	1.64	11.49
		8-bit	40	61.0	461.0	2.17	15.18
	Disable	12-bit	49	16.5	506.5	1.97	-
		8-bit	40	9.5	409.5	2.44	-
400 kHz (2.5us period)	Enable	12-bit	49	119.0	241.5	4.14	28.99
		8-bit	40	61.0	161.0	6.21	43.48
	Disable	12-bit	49	16.5	139.0	7.19	-
		8-bit	40	9.5	109.5	9.13	-

© 2016 ROHM Co., Ltd. All rights reserved.

Operational Notes

1. Reverse Connection of Power Supply

Connecting the power supply in reverse polarity can damage the IC. Take precautions against reverse polarity when connecting the power supply, such as mounting an external diode between the power supply and the IC's power supply pins.

2. Power Supply Lines

Design the PCB layout pattern to provide low impedance supply lines. Furthermore, connect a capacitor to ground at all power supply pins. Consider the effect of temperature and aging on the capacitance value when using electrolytic capacitors.

3. Ground Voltage

Ensure that no pins are at a voltage below that of the ground pin at any time, even during transient condition.

4. Ground Wiring Pattern

When using both small-signal and large-current ground traces, the two ground traces should be routed separately but connected to a single ground at the reference point of the application board to avoid fluctuations in the small-signal ground caused by large currents. Also ensure that the ground traces of external components do not cause variations on the ground voltage. The ground lines must be as short and thick as possible to reduce line impedance.

5. Thermal Consideration

Should by any chance the maximum junction temperature rating be exceeded the rise in temperature of the chip may result in deterioration of the properties of the chip. In case of exceeding this absolute maximum rating, increase the board size and copper area to prevent exceeding the maximum junction temperature rating.

6. Recommended Operating Conditions

These conditions represent a range within which the expected characteristics of the IC can be approximately obtained. The electrical characteristics are guaranteed under the conditions of each parameter.

7. Inrush Current

When power is first supplied to the IC, it is possible that the internal logic may be unstable and inrush current may flow instantaneously due to the internal powering sequence and delays, especially if the IC has more than one power supply. Therefore, give special consideration to power coupling capacitance, power wiring, width of ground wiring, and routing of connections.

8. Operation Under Strong Electromagnetic Field

Operating the IC in the presence of a strong electromagnetic field may cause the IC to malfunction.

9. Testing on Application Boards

When testing the IC on an application board, connecting a capacitor directly to a low-impedance output pin may subject the IC to stress. Always discharge capacitors completely after each process or step. The IC's power supply should always be turned off completely before connecting or removing it from the test setup during the inspection process. To prevent damage from static discharge, ground the IC during assembly and use similar precautions during transport and storage.

10. Inter-pin Short and Mounting Errors

Ensure that the direction and position are correct when mounting the IC on the PCB. Incorrect mounting may result in damaging the IC. Avoid nearby pins being shorted to each other especially to ground, power supply and output pin. Inter-pin shorts could be due to many reasons such as metal particles, water droplets (in very humid environment) and unintentional solder bridge deposited in between pins during assembly to name a few.

11. Unused Input Pins

Input pins of an IC are often connected to the gate of a MOS transistor. The gate has extremely high impedance and extremely low capacitance. If left unconnected, the electric field from the outside can easily charge it. The small charge acquired in this way is enough to produce a significant effect on the conduction through the transistor and cause unexpected operation of the IC. So unless otherwise specified, unused input pins should be connected to the power supply or ground line.

12. Regarding the Input Pin of the IC

In the construction of this IC, P-N junctions are inevitably formed creating parasitic diodes or transistors. The operation of these parasitic elements can result in mutual interference among circuits, operational faults, or physical damage. Therefore, conditions which cause these parasitic elements to operate, such as applying a voltage to an input pin lower than the ground voltage should be avoided. Furthermore, do not apply a voltage to the input pins when no power supply voltage is applied to the IC. Even if the power supply voltage is applied, make sure that the input pins have voltages within the values specified in the electrical characteristics of this IC.

© 2016 ROHM Co., Ltd. All rights reserved.

Operational Notes – continued

13. Ceramic Capacitor

When using a ceramic capacitor, determine a capacitance value considering the change of capacitance with temperature and the decrease in nominal capacitance due to DC bias and others.

© 2016 ROHM Co., Ltd. All rights reserved.

Ordering Information

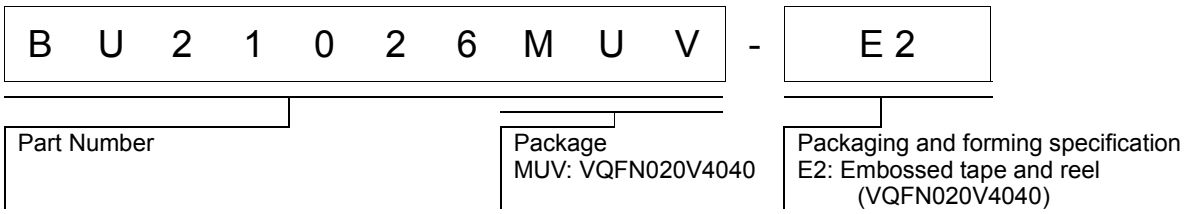

Marking Diagrams

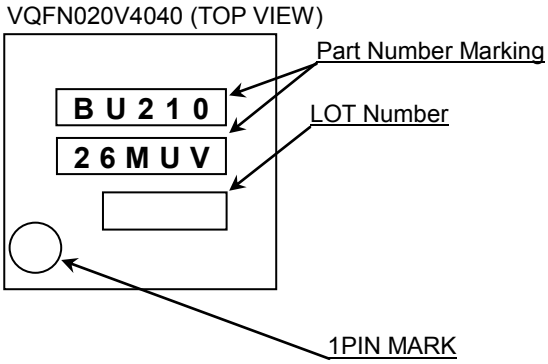

Part Number Marking	Package	Orderable Part Number
BU21026MUV	VQFN020V4040	BU21026MUV-E2

© 2016 ROHM Co., Ltd. All rights reserved.

Physical Dimension, Tape and Reel Information

Package Name	VQFN020V4040

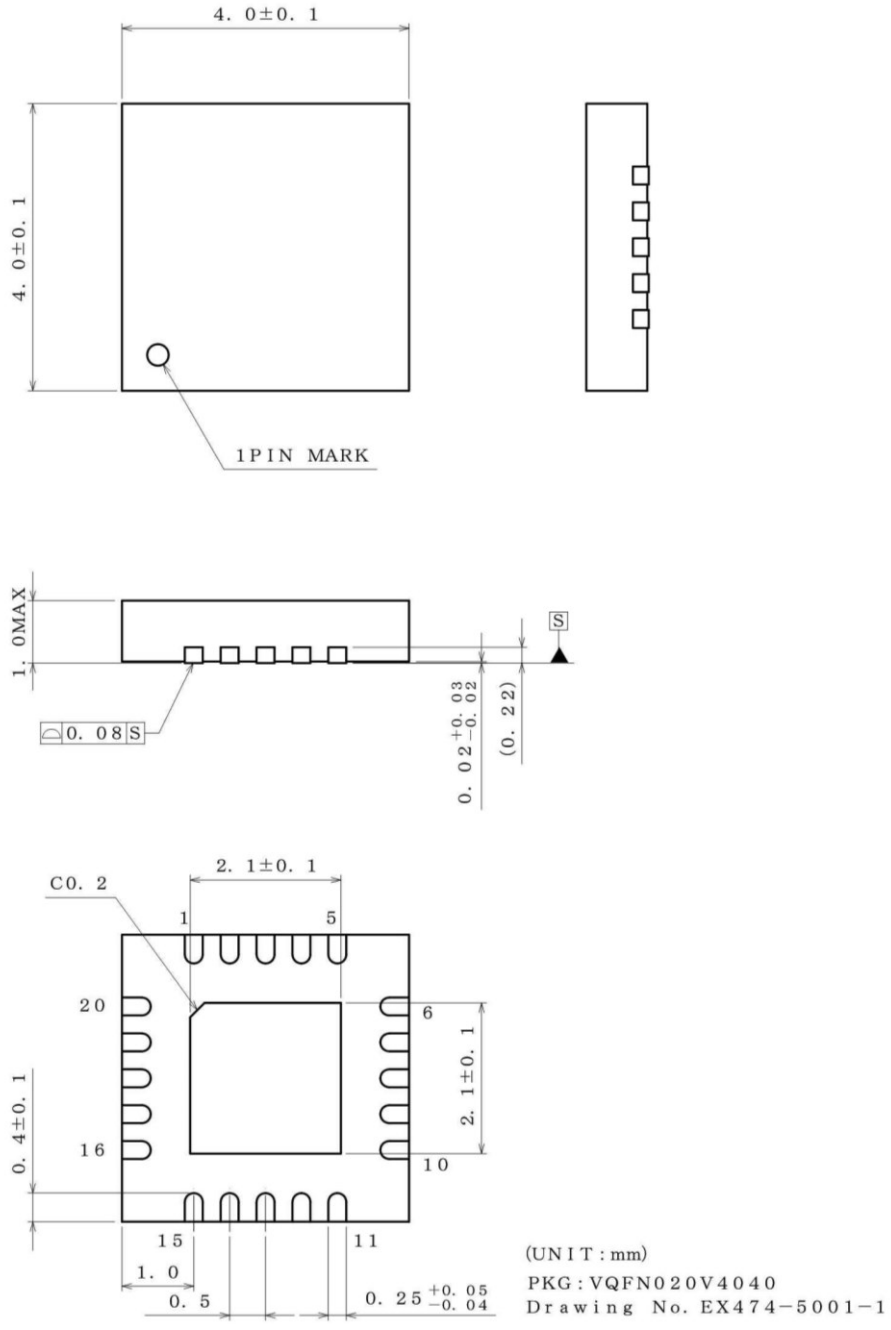

<Tape and Reel information>

Tape	Embossed carrier tape
Quantity	2500pcs
Direction of feed	E2 (The direction is the 1pin of product is at the upper left when you hold reel on the left hand and you pull out the tape on the right hand)

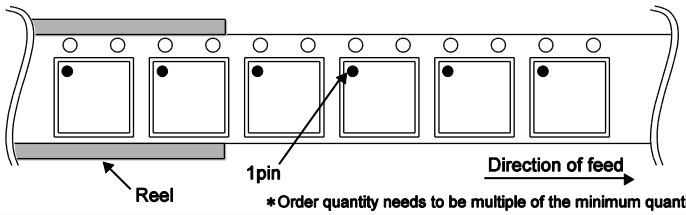

*Order quantity needs to be multiple of the minimum quantity.

© 2016 ROHM Co., Ltd. All rights reserved.

Revision History

Date	Revision	Changes
04.Aug.2016	001	New Release

© 2016 ROHM Co., Ltd. All rights reserved.

Notice

Precaution on using ROHM Products

1. Our Products are designed and manufactured for application in ordinary electronic equipments (such as AV equipment, OA equipment, telecommunication equipment, home electronic appliances, amusement equipment, etc.). If you intend to use our Products in devices requiring extremely high reliability (such as medical equipment (Note 1), transport equipment, traffic equipment, aircraft/spacecraft, nuclear power controllers, fuel controllers, car equipment including car accessories, safety devices, etc.) and whose malfunction or failure may cause loss of human life, bodily injury or serious damage to property ("Specific Applications"), please consult with the ROHM sales representative in advance. Unless otherwise agreed in writing by ROHM in advance, ROHM shall not be in any way responsible or liable for any damages, expenses or losses incurred by you or third parties arising from the use of any ROHM's Products for Specific Applications.

(Note1) Medical Equipment Classification of the Specific Applications

JAPAN	USA	EU	CHINA
CLASSⅢ	CLASSⅢ	CLASSⅡb	CLASSⅢ
CLASSⅣ		CLASSⅢ	

2. ROHM designs and manufactures its Products subject to strict quality control system. However, semiconductor products can fail or malfunction at a certain rate. Please be sure to implement, at your own responsibilities, adequate safety measures including but not limited to fail-safe design against the physical injury, damage to any property, which a failure or malfunction of our Products may cause. The following are examples of safety measures:
   [a] Installation of protection circuits or other protective devices to improve system safety
   [b] Installation of redundant circuits to reduce the impact of single or multiple circuit failure

3. Our Products are designed and manufactured for use under standard conditions and not under any special or extraordinary environments or conditions, as exemplified below. Accordingly, ROHM shall not be in any way responsible or liable for any damages, expenses or losses arising from the use of any ROHM's Products under any special or extraordinary environments or conditions. If you intend to use our Products under any special or extraordinary environments or conditions (as exemplified below), your independent verification and confirmation of product performance, reliability, etc, prior to use, must be necessary:
   [a] Use of our Products in any types of liquid, including water, oils, chemicals, and organic solvents
   [b] Use of our Products outdoors or in places where the Products are exposed to direct sunlight or dust
   [c] Use of our Products in places where the Products are exposed to sea wind or corrosive gases, including Cl_2, H_2S, NH_3, SO_2, and NO_2
   [d] Use of our Products in places where the Products are exposed to static electricity or electromagnetic waves
   [e] Use of our Products in proximity to heat-producing components, plastic cords, or other flammable items
   [f] Sealing or coating our Products with resin or other coating materials
   [g] Use of our Products without cleaning residue of flux (even if you use no-clean type fluxes, cleaning residue of flux is recommended); or Washing our Products by using water or water-soluble cleaning agents for cleaning residue after soldering
   [h] Use of the Products in places subject to dew condensation

4. The Products are not subject to radiation-proof design.

5. Please verify and confirm characteristics of the final or mounted products in using the Products.

6. In particular, if a transient load (a large amount of load applied in a short period of time, such as pulse. is applied, confirmation of performance characteristics after on-board mounting is strongly recommended. Avoid applying power exceeding normal rated power; exceeding the power rating under steady-state loading condition may negatively affect product performance and reliability.

7. De-rate Power Dissipation depending on ambient temperature. When used in sealed area, confirm that it is the use in the range that does not exceed the maximum junction temperature.

8. Confirm that operation temperature is within the specified range described in the product specification.

9. ROHM shall not be in any way responsible or liable for failure induced under deviant condition from what is defined in this document.

Precaution for Mounting / Circuit board design

1. When a highly active halogenous (chlorine, bromine, etc.) flux is used, the residue of flux may negatively affect product performance and reliability.

2. In principle, the reflow soldering method must be used on a surface-mount products, the flow soldering method must be used on a through hole mount products. If the flow soldering method is preferred on a surface-mount products, please consult with the ROHM representative in advance.

For details, please refer to ROHM Mounting specification

© 2015 ROHM Co., Ltd. All rights reserved.

Precautions Regarding Application Examples and External Circuits

1. If change is made to the constant of an external circuit, please allow a sufficient margin considering variations of the characteristics of the Products and external components, including transient characteristics, as well as static characteristics.

2. You agree that application notes, reference designs, and associated data and information contained in this document are presented only as guidance for Products use. Therefore, in case you use such information, you are solely responsible for it and you must exercise your own independent verification and judgment in the use of such information contained in this document. ROHM shall not be in any way responsible or liable for any damages, expenses or losses incurred by you or third parties arising from the use of such information.

Precaution for Electrostatic

This Product is electrostatic sensitive product, which may be damaged due to electrostatic discharge. Please take proper caution in your manufacturing process and storage so that voltage exceeding the Products maximum rating will not be applied to Products. Please take special care under dry condition (e.g. Grounding of human body / equipment / solder iron, isolation from charged objects, setting of Ionizer, friction prevention and temperature / humidity control).

Precaution for Storage / Transportation

1. Product performance and soldered connections may deteriorate if the Products are stored in the places where:
   [a] the Products are exposed to sea winds or corrosive gases, including Cl2, H2S, NH3, SO2, and NO2
   [b] the temperature or humidity exceeds those recommended by ROHM
   [c] the Products are exposed to direct sunshine or condensation
   [d] the Products are exposed to high Electrostatic

2. Even under ROHM recommended storage condition, solderability of products out of recommended storage time period may be degraded. It is strongly recommended to confirm solderability before using Products of which storage time is exceeding the recommended storage time period.

3. Store / transport cartons in the correct direction, which is indicated on a carton with a symbol. Otherwise bent leads may occur due to excessive stress applied when dropping of a carton.

4. Use Products within the specified time after opening a humidity barrier bag. Baking is required before using Products of which storage time is exceeding the recommended storage time period.

Precaution for Product Label

A two-dimensional barcode printed on ROHM Products label is for ROHM's internal use only.

Precaution for Disposition

When disposing Products please dispose them properly using an authorized industry waste company.

Precaution for Foreign Exchange and Foreign Trade act

Since concerned goods might be fallen under listed items of export control prescribed by Foreign exchange and Foreign trade act, please consult with ROHM in case of export.

Precaution Regarding Intellectual Property Rights

1. All information and data including but not limited to application example contained in this document is for reference only. ROHM does not warrant that foregoing information or data will not infringe any intellectual property rights or any other rights of any third party regarding such information or data.

2. ROHM shall not have any obligations where the claims, actions or demands arising from the combination of the Products with other articles such as components, circuits, systems or external equipment (including software).

3. No license, expressly or implied, is granted hereby under any intellectual property rights or other rights of ROHM or any third parties with respect to the Products or the information contained in this document. Provided, however, that ROHM will not assert its intellectual property rights or other rights against you or your customers to the extent necessary to manufacture or sell products containing the Products, subject to the terms and conditions herein.

Other Precaution

1. This document may not be reprinted or reproduced, in whole or in part, without prior written consent of ROHM.

2. The Products may not be disassembled, converted, modified, reproduced or otherwise changed without prior written consent of ROHM.

3. In no event shall you use in any way whatsoever the Products and the related technical information contained in the Products or this document for any military purposes, including but not limited to, the development of mass-destruction weapons.

4. The proper names of companies or products described in this document are trademarks or registered trademarks of ROHM, its affiliated companies or third parties.

© 2015 ROHM Co., Ltd. All rights reserved.

General Precaution

1. Before you use our Products, you are requested to carefully read this document and fully understand its contents. ROHM shall not be in any way responsible or liable for failure, malfunction or accident arising from the use of any ROHM's Products against warning, caution or note contained in this document.

2. All information contained in this document is current as of the issuing date and subject to change without any prior notice. Before purchasing or using ROHM's Products, please confirm the latest information with a ROHM sales representative.

3. The information contained in this document is provided on an "as is" basis and ROHM does not warrant that all information contained in this document is accurate and/or error-free. ROHM shall not be in any way responsible or liable for any damages, expenses or losses incurred by you or third parties resulting from inaccuracy or errors of or concerning such information.

© 2015 ROHM Co., Ltd. All rights reserved.

BU21026MUV - Web Page

Part Number	BU21026MUV
Package	VQFN020V4040
Unit Quantity	2500
Minimum Package Quantity	2500
Packing Type	Taping
Constitution Materials List	inquiry
RoHS	Yes