Serial-in / Parallel-out Driver Series

2-input Serial- in / Parallel- out Drivers

BU2090F BU2090FS

Description

BU2090F/BU2090FS are an open drain output driver.It incorporates a built-in shift register and a latch circuit to turn on a maximum of 12 Outputs by a 2-line interface, linked to a microcontroller.
An open-drain output provides maximum 25mA current.

Features

- LED can be driven directly
- 12 bit parallel output
- This product can be operated on low voltage

Key Specifications

- Power supply voltage range: 2.7V to 5.5V
- Output voltage: 0V to 25V
- Operating temperature range: -40℃ to +85℃

Package

	W(Typ) x D(Typ) x H(Max)
SOP16	10.00mm x 6.20mm x 1.71mm
SSOP-A16	6.60mm x 6.20mm x 1.71mm

Applications

- Drive of LED
- Drive of Solenoid
- Drive of Relay

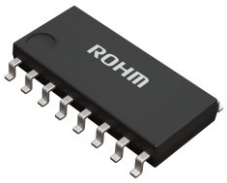

SOP16
BU2090F



SSOP-A16
BU2090FS

Pin Configurations

(Top View)

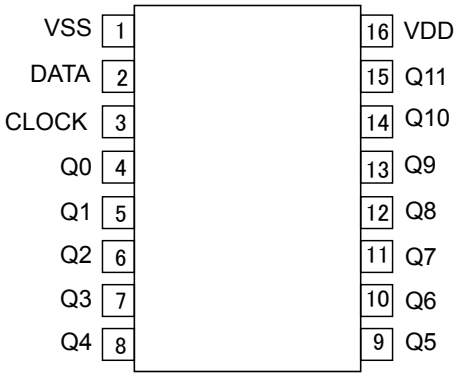

Block Diagrams

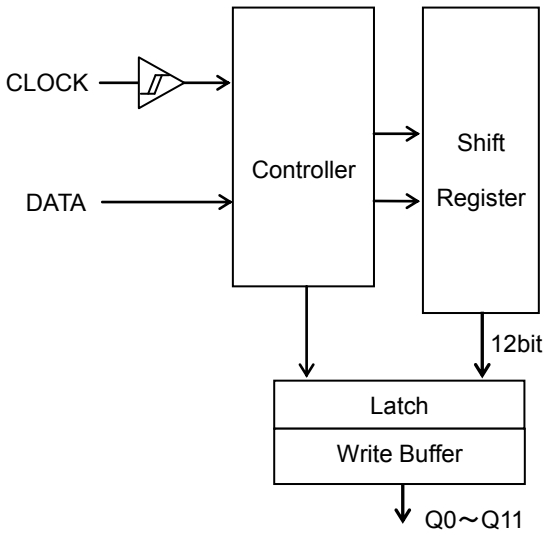

© 2013 ROHM Co., Ltd. All rights reserved.

Pin Descriptions

Pin No.	Pin Name	I/O	Function
1	VSS	-	Ground
2	DATA	I	Serial data input
3	CLOCK	I	Serial clock input
4	Q0	O	Parallel data output (Nch Open-Drain)
5	Q1		
6	Q2		
7	Q3		
8	Q4		
9	Q5		
10	Q6		
11	Q7		
12	Q8		
13	Q9		
14	Q10		
15	Q11		
16	VDD	-	Power supply

Absolute Maximum Ratings

Parameter	Symbol	Limits	Unit
Power Supply Voltage	V_{DD}	-0.3 to +7.0	V
Input Voltage	V_{IN}	V_{SS}-0.3 to V_{DD}+0.3	V
Output Voltage	V_O	V_{SS}-0.3 to +25	V
Operating Temperature	T_{opr}	-40 to +85	°C
Storage Temperature	T_{stg}	-55 to +125	°C
Power Dissipation	P_D	0.50 (Note 1)	W
		0.65 (Note 2)	

(Note 1) Mounted on 70mm x 70mm x 1.6mm glass epoxy board. Reduce 5.0mW per 1°C above 25°C.
(Note 2) Mounted on 70mm x 70mm x 1.6mm glass epoxy board. Reduce 6.5mW per 1°C above 25°C.
Caution: Operating the IC over the absolute maximum ratings may damage the IC. The damage can either be a short circuit between pins or an open circuit between pins and the internal circuitry. Therefore, it is important to consider circuit protection measures, such as adding a fuse, in case the IC is operated over the absolute maximum ratings.

Recommended Operating Conditions (T_A=25°C, V_{SS}=0V)

Parameter	Symbol	Limits	Unit
Power supply voltage	V_{DD}	+2.7 to +5.5	V
Output voltage	V_O	0 to +25	V

© 2013 ROHM Co., Ltd. All rights reserved.

Electrical Characteristics

DC Characteristics

(unless otherwise noted, V_{DD}=5V, V_{SS}=0V, T_A =25℃)

Parameter	Symbol	Limits			Unit	Condition
		Min	Typ	Max		
Input High-level voltage	V_{IH}	3.5	-	-	V	
Input Low-level voltage	V_{IL}	-	-	1.5	V	
Output Low-level voltage	V_{OL}	-	-	2.0	V	I_{OL}=20mA
Input High-level current	I_{IH}	-	-	2.0	μA	V_{IN}=V_{DD}
Input Low-level current	I_{IL}	-	-	-2.0	μA	V_{IN}=0
“H” output leak current	I_{OZH}	-	-	10	μA	V_O=25V
“L” output leak current	I_{OZL}	-		-5.0	μA	V_O=0V
Static dissipation current	I_{DD}	-	-	5.0	μA	

Timing Characteristics

(Unless otherwise noted, V_{DD}=5V, V_{SS}=0V, T_A =25℃)

Parameter	Symbol	Limits			Unit	Condition
		Min	Typ	Max		
Minimum clock frequency	t_W	500	-	-	ns	
Data shift set up time	t_{SU}	200	-	-	ns	
Data shift hold time	t_H	200	-	-	ns	
Data latch set up time	t_{LSUH}	50	-	-	ns	
Data latch hold time	t_{LHH}	250	-	-	ns	
Data latch ”L”set up time	t_{LSUL}	200	-	-	ns	
Data latch ”L”hold time	t_{LHL}	250	-	-	ns	

Waveform of Timing Characteristics

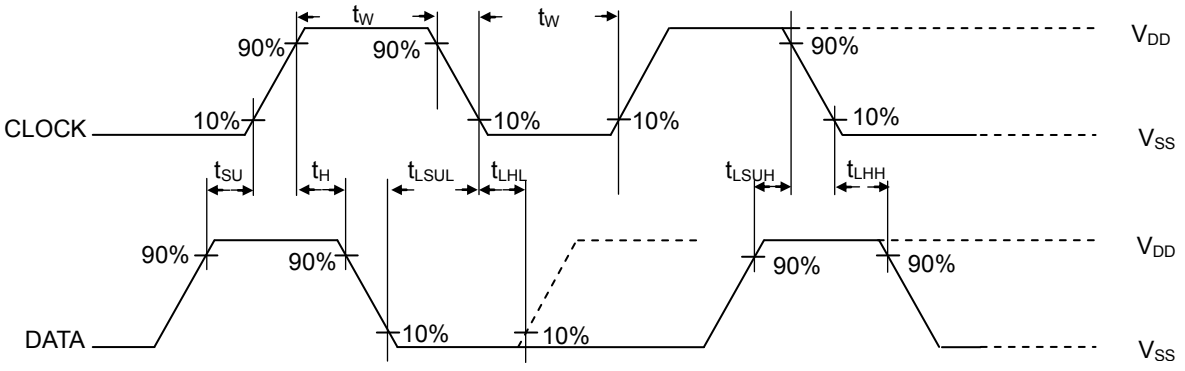

Figure 1. Waveform of Timing Characteristics

© 2013 ROHM Co., Ltd. All rights reserved.

Test Circuits

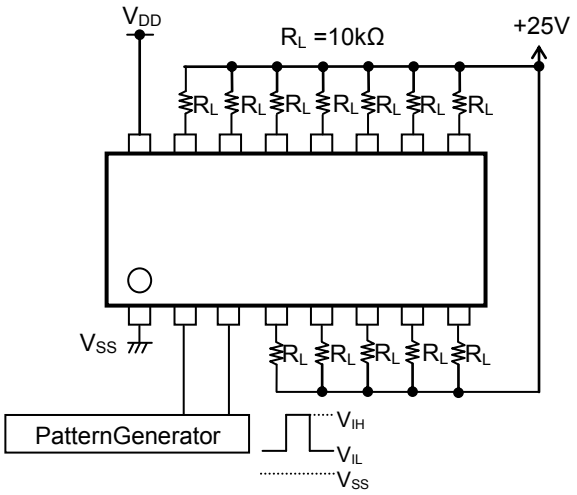

Figure 2. Test Circuit of Input H/LVoltage

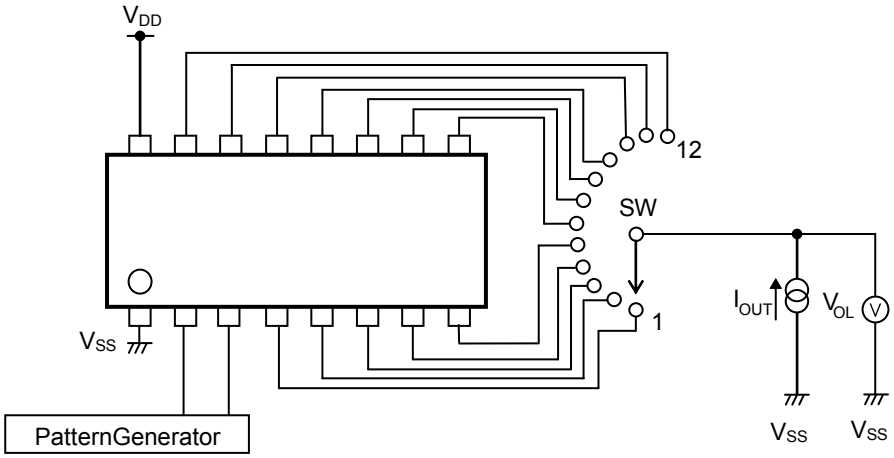

Figure 3. Test Circuit of Output L Voltage

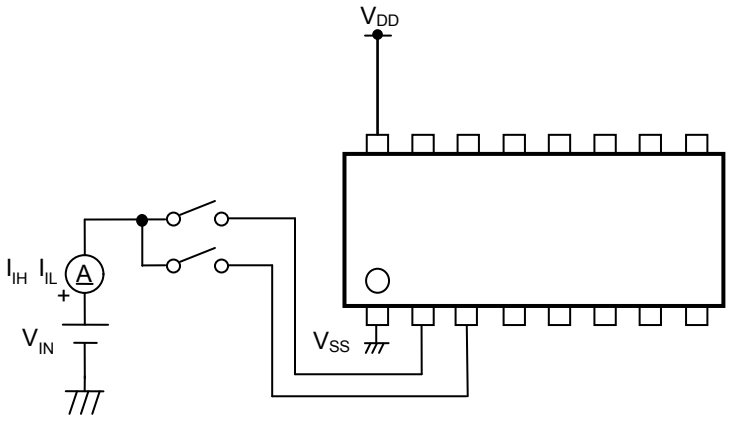

Figure 4. Test Circuit of Input H/LCurrent

© 2013 ROHM Co., Ltd. All rights reserved.

Test Circuits - continued

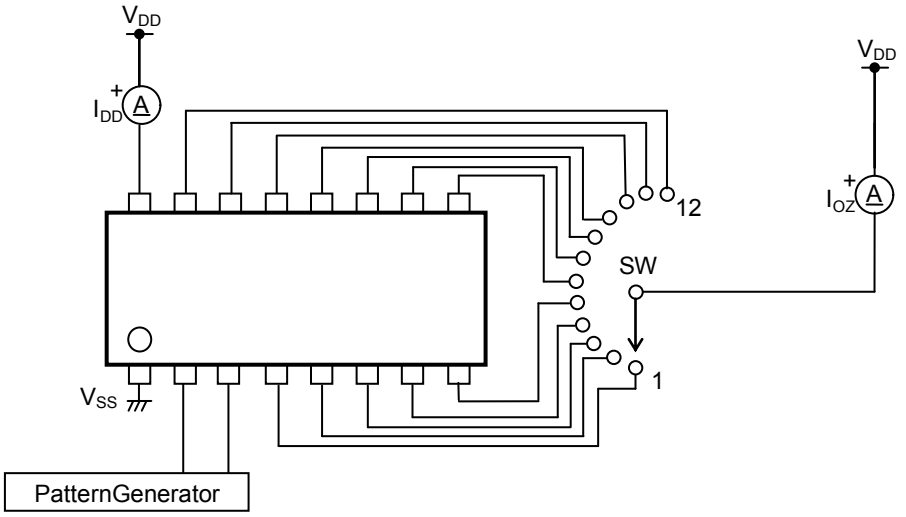

Figure 5. Test Circuit of Output Leak Current / Static Dissipation Current

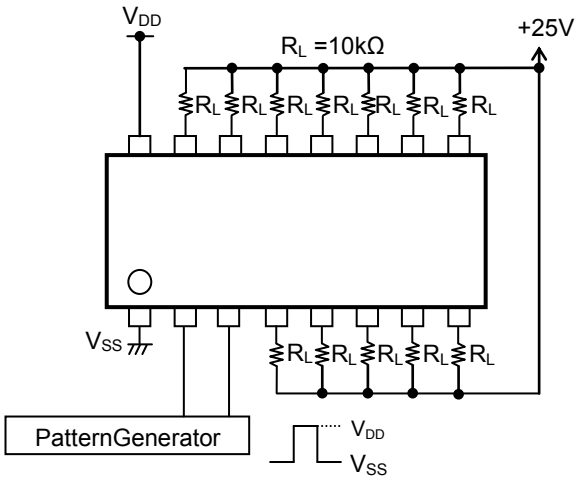

Figure 6. Test Circuit of Timing Characteristics

© 2013 ROHM Co., Ltd. All rights reserved.

Power Dissipation

Power dissipation(total loss) indicates the power that can be consumed by IC at T_A=25°C(normal temperature). IC is heated when it consumed power, and the temperature of IC chip becomes higher than ambient temperature. The temperature that can be accepted by IC chip depends on circuit configuration, manufacturing process, and consumable power is limited. Power dissipation is determined by the temperature allowed in IC chip(maximum junction temperature) and thermal resistance of package(heat dissipation capability). The maximum junction temperature is typically equal to the maximum value in the storage temperature range. Heat generated by consumed power of IC radiates from the mold resin or lead frame of the package. The parameter which indicates this heat dissipation capability(hardness of heat release)is called thermal resistance, represented by the symbol θ_{JA} (°C/W).The temperature of IC inside the package can be estimated by this thermal resistance. Figure 11 shows the model of thermal resistance of the package. Thermal resistance θ_{JA}, ambient temperature T_A, maximum junction temperature T_{Jmax}, and power dissipation P_D can be calculated by the equation below:

$$\theta_{JA} = (T_{Jmax} - T_A) / P_D \quad (°C/W)$$

Derating curve in Figure 12 indicates power that can be consumed by IC with reference to ambient temperature. Power that can be consumed by IC with reference to ambient temperature. Power that can be consumed by IC begins to attenuate at certain ambient temperature. This gradient is determined by thermal resistance θ_{JA}. Thermal resistance θ_{JA} depends on chip size, power consumption, package, ambient temperature, package condition, wind velocity, etc even when the same of package is used. Thermal reduction curve indicates a reference value measured at a specified condition.

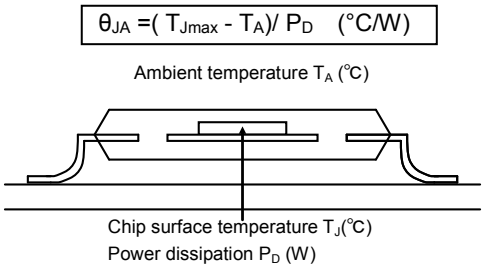

Figure 7. Thermal resistance

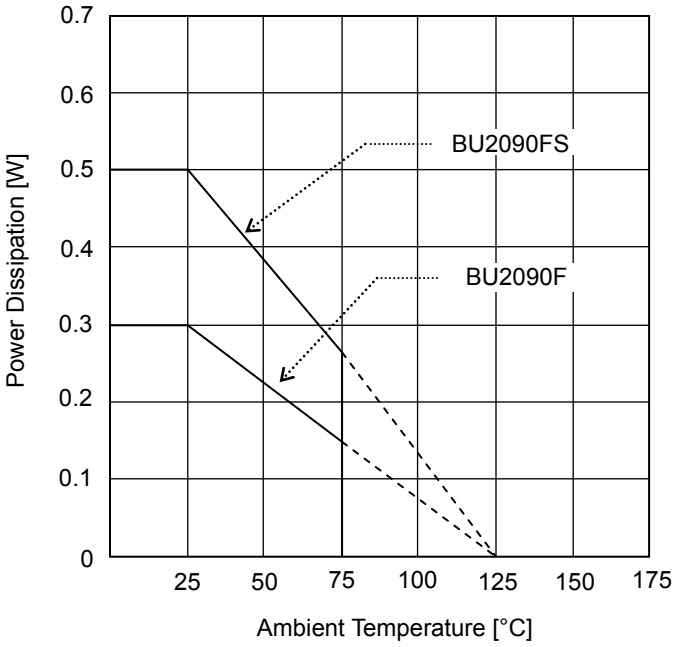

Figure 8. Derating Curve

© 2013 ROHM Co., Ltd. All rights reserved.

Timing Chart

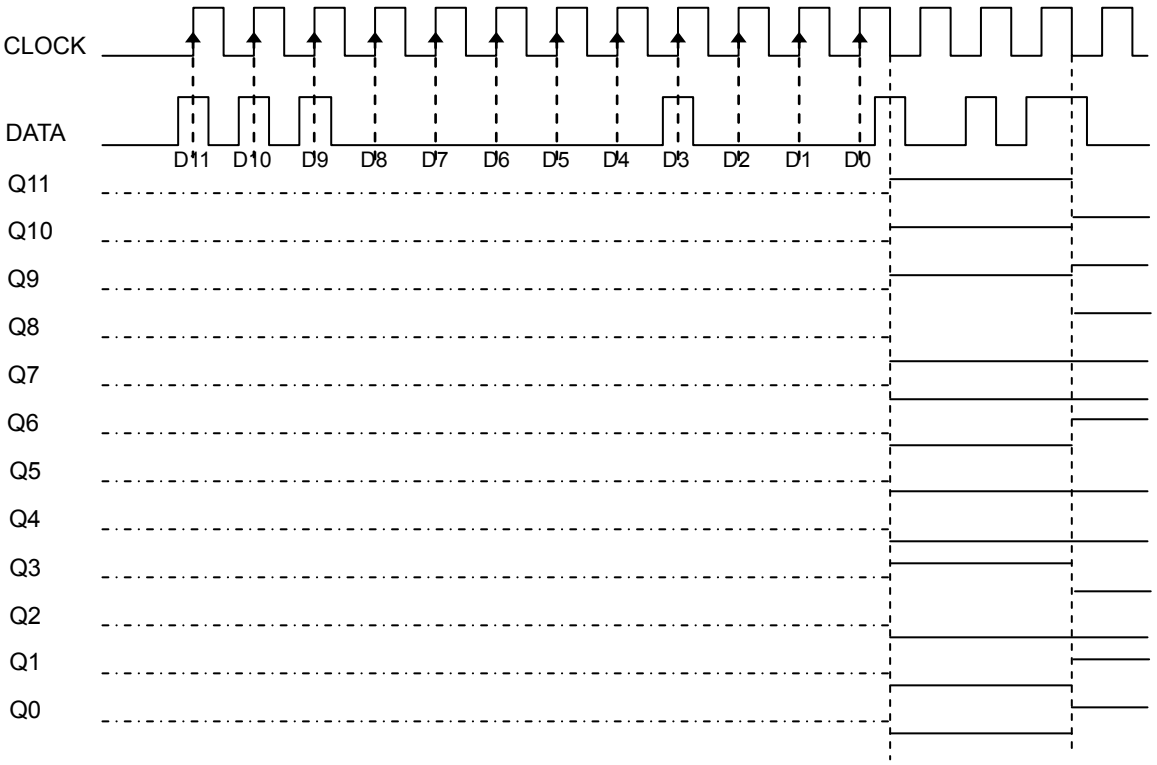

Note3) - - - - - Indicates undefined output.
Note4) Output terminal is provided with a pull-up resistor.

Figure 9. Timing chart

I/O Equivalence Circuits

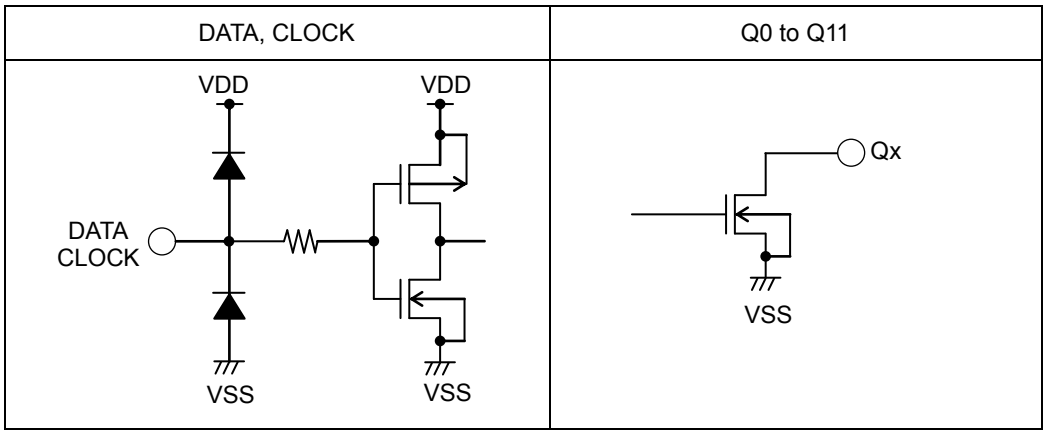

© 2013 ROHM Co., Ltd. All rights reserved.

Operational Notes

1. **Reverse Connection of Power Supply**
   Connecting the power supply in reverse polarity can damage the IC. Take precautions against reverse polarity when connecting the power supply, such as mounting an external diode between the power supply and the IC's power supply pins.

2. **Power Supply Lines**
   Design the PCB layout pattern to provide low impedance supply lines. Separate the ground and supply lines of the digital and analog blocks to prevent noise in the ground and supply lines of the digital block from affecting the analog block. Furthermore, connect a capacitor to ground at all power supply pins. Consider the effect of temperature and aging on the capacitance value when using electrolytic capacitors.

3. **Ground Voltage**
   Ensure that no pins are at a voltage below that of the ground pin at any time, even during transient condition.

4. **Ground Wiring Pattern**
   When using both small-signal and large-current ground traces, the two ground traces should be routed separately but connected to a single ground at the reference point of the application board to avoid fluctuations in the small-signal ground caused by large currents. Also ensure that the ground traces of external components do not cause variations on the ground voltage. The ground lines must be as short and thick as possible to reduce line impedance.

5. **Thermal Consideration**
   Should by any chance the power dissipation rating be exceeded the rise in temperature of the chip may result in deterioration of the properties of the chip. In case of exceeding this absolute maximum rating, increase the board size and copper area to prevent exceeding the Pd rating.

6. **Recommended Operating Conditions**
   These conditions represent a range within which the expected characteristics of the IC can be approximately obtained. The electrical characteristics are guaranteed under the conditions of each parameter.

7. **Inrush Current**
   When power is first supplied to the IC, it is possible that the internal logic may be unstable and inrush current may flow instantaneously due to the internal powering sequence and delays, especially if the IC has more than one power supply. Therefore, give special consideration to power coupling capacitance, power wiring, width of ground wiring, and routing of connections.

8. **Operation Under Strong Electromagnetic Field**
   Operating the IC in the presence of a strong electromagnetic field may cause the IC to malfunction.

9. **Testing on Application Boards**
   When testing the IC on an application board, connecting a capacitor directly to a low-impedance output pin may subject the IC to stress. Always discharge capacitors completely after each process or step. The IC's power supply should always be turned off completely before connecting or removing it from the test setup during the inspection process. To prevent damage from static discharge, ground the IC during assembly and use similar precautions during transport and storage.

10. **Inter-pin Short and Mounting Errors**
    Ensure that the direction and position are correct when mounting the IC on the PCB. Incorrect mounting may result in damaging the IC. Avoid nearby pins being shorted to each other especially to ground, power supply and output pin. Inter-pin shorts could be due to many reasons such as metal particles, water droplets (in very humid environment) and unintentional solder bridge deposited in between pins during assembly to name a few.

11. **Unused Input Pins**
    Input pins of an IC are often connected to the gate of a MOS transistor. The gate has extremely high impedance and extremely low capacitance. If left unconnected, the electric field from the outside can easily charge it. The small charge acquired in this way is enough to produce a significant effect on the conduction through the transistor and cause unexpected operation of the IC. So unless otherwise specified, unused input pins should be connected to the power supply or ground line.

© 2013 ROHM Co., Ltd. All rights reserved.

Operational Notes – continued

12. Regarding the Input Pin of the IC

In the construction of this IC, P-N junctions are inevitably formed creating parasitic diodes or transistors. The operation of these parasitic elements can result in mutual interference among circuits, operational faults, or physical damage. Therefore, conditions which cause these parasitic elements to operate, such as applying a voltage to an input pin lower than the ground voltage should be avoided. Furthermore, do not apply a voltage to the input pins when no power supply voltage is applied to the IC. Even if the power supply voltage is applied, make sure that the input pins have voltages within the values specified in the electrical characteristics of this IC.

13. Ceramic Capacitor

When using a ceramic capacitor, determine the dielectric constant considering the change of capacitance with temperature and the decrease in nominal capacitance due to DC bias and others.

14. Area of Safe Operation (ASO)

Operate the IC such that the output voltage, output current, and power dissipation are all within the Area of Safe Operation (ASO).

Ordering Information

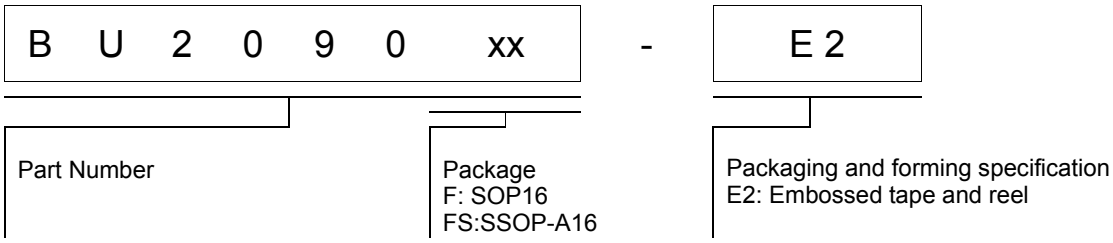

Marking Diagrams

SOP16(TOP VIEW)

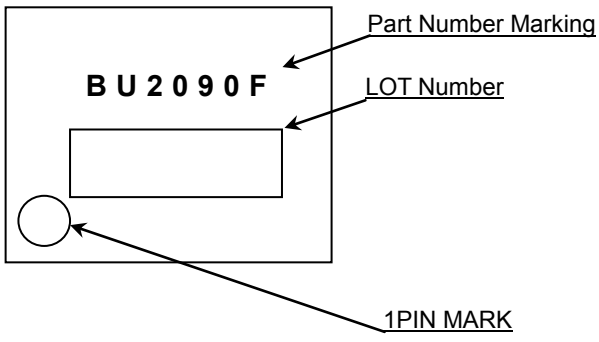

SSOP-A16(TOP VIEW)

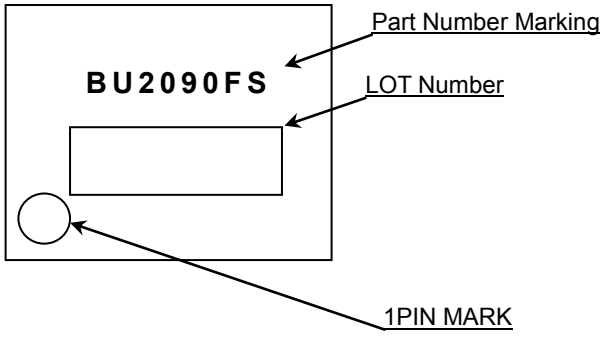

© 2013 ROHM Co., Ltd. All rights reserved.

Physical Dimension, Tape and Reel Information

Package Name	SOP16

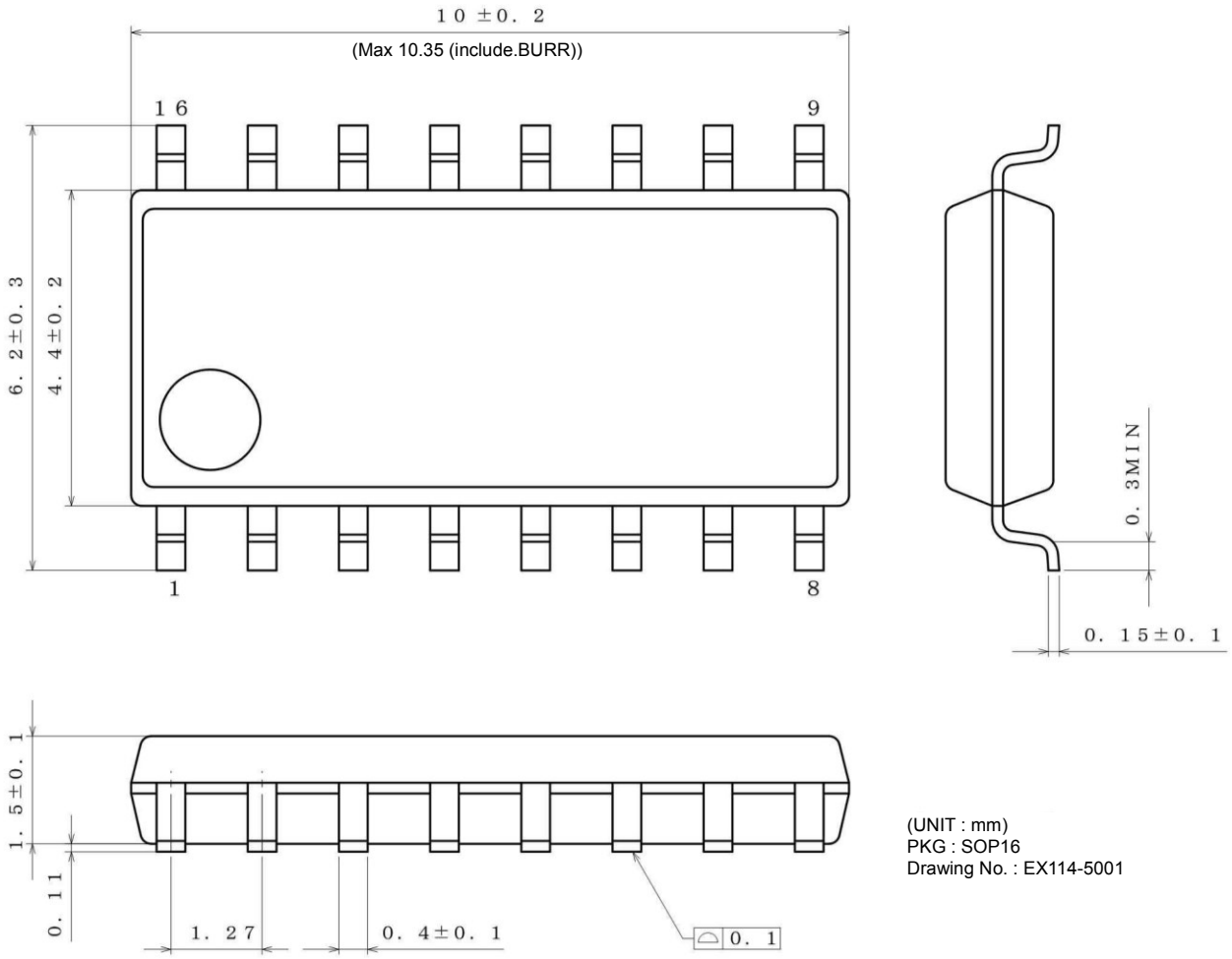

(UNIT : mm)
PKG : SOP16
Drawing No. : EX114-5001

<Tape and Reel information>

Tape	Embossed carrier tape
Quantity	2500pcs
Direction of feed	E2 (The direction is the 1pin of product is at the upper left when you hold reel on the left hand and you pull out the tape on the right hand)

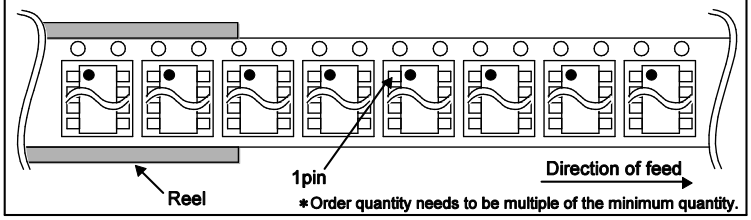

© 2013 ROHM Co., Ltd. All rights reserved.

Physical Dimension, Tape and Reel Information

Package Name	SSOP-A16

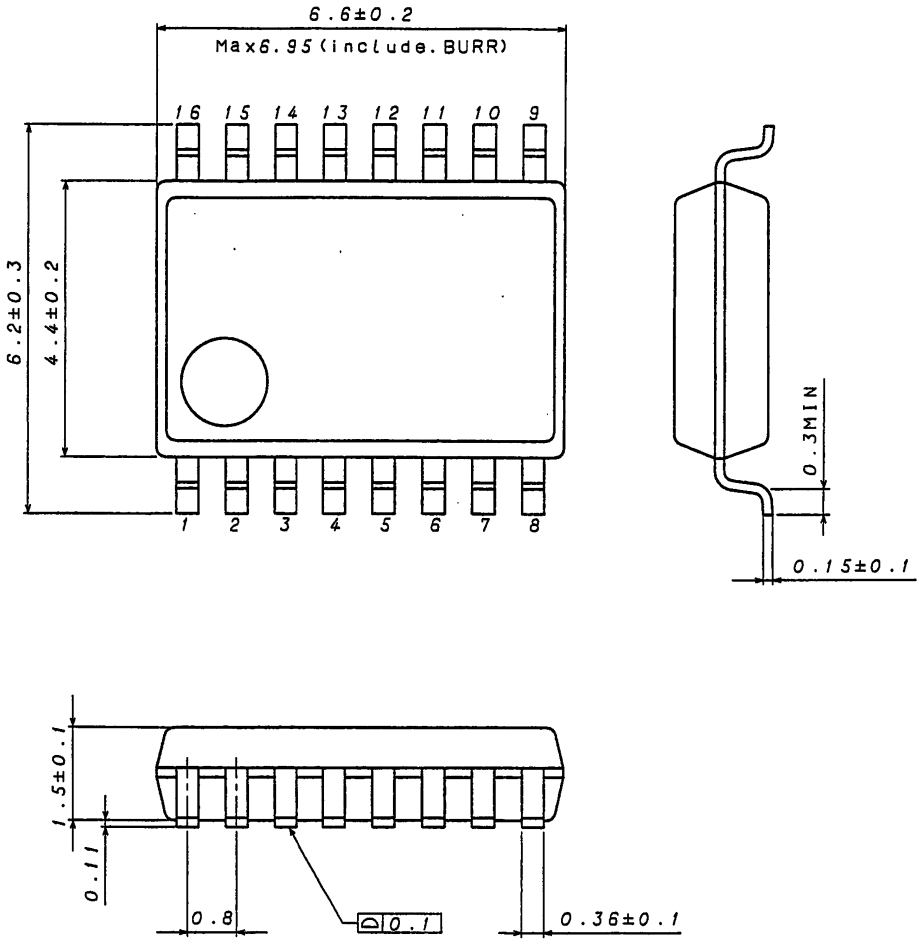

(UNIT:mm)

PKG:SSOP-A16
Drawing No.EX131-5002

<Tape and Reel information>

Tape	Embossed carrier tape
Quantity	2500pcs
Direction of feed	E2 (The direction is the 1pin of product is at the upper left when you hold reel on the left hand and you pull out the tape on the right hand)

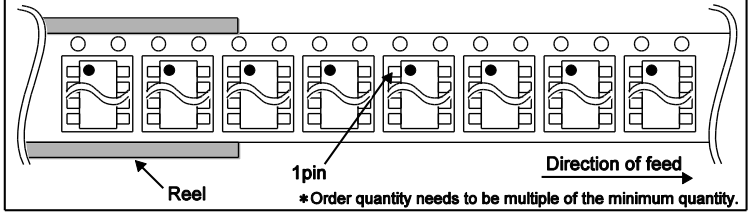

*Order quantity needs to be multiple of the minimum quantity.

© 2013 ROHM Co., Ltd. All rights reserved.

Revision History

Date	Revision	Changes
25.Oct.2013	001	New Release
18.Sep.2015	002	Page.8,9 Updated Operational Notes.

© 2013 ROHM Co., Ltd. All rights reserved.

Notice

Precaution on using ROHM Products

1. Our Products are designed and manufactured for application in ordinary electronic equipments (such as AV equipment, OA equipment, telecommunication equipment, home electronic appliances, amusement equipment, etc.). If you intend to use our Products in devices requiring extremely high reliability (such as medical equipment (Note 1), transport equipment, traffic equipment, aircraft/spacecraft, nuclear power controllers, fuel controllers, car equipment including car accessories, safety devices, etc.) and whose malfunction or failure may cause loss of human life, bodily injury or serious damage to property ("Specific Applications"), please consult with the ROHM sales representative in advance. Unless otherwise agreed in writing by ROHM in advance, ROHM shall not be in any way responsible or liable for any damages, expenses or losses incurred by you or third parties arising from the use of any ROHM's Products for Specific Applications.

(Note1) Medical Equipment Classification of the Specific Applications

JAPAN	USA	EU	CHINA
CLASSⅢ	CLASSⅢ	CLASSⅡb	CLASSⅢ
CLASSⅣ		CLASSⅢ	

2. ROHM designs and manufactures its Products subject to strict quality control system. However, semiconductor products can fail or malfunction at a certain rate. Please be sure to implement, at your own responsibilities, adequate safety measures including but not limited to fail-safe design against the physical injury, damage to any property, which a failure or malfunction of our Products may cause. The following are examples of safety measures:
   [a] Installation of protection circuits or other protective devices to improve system safety
   [b] Installation of redundant circuits to reduce the impact of single or multiple circuit failure

3. Our Products are designed and manufactured for use under standard conditions and not under any special or extraordinary environments or conditions, as exemplified below. Accordingly, ROHM shall not be in any way responsible or liable for any damages, expenses or losses arising from the use of any ROHM's Products under any special or extraordinary environments or conditions. If you intend to use our Products under any special or extraordinary environments or conditions (as exemplified below), your independent verification and confirmation of product performance, reliability, etc, prior to use, must be necessary:
   [a] Use of our Products in any types of liquid, including water, oils, chemicals, and organic solvents
   [b] Use of our Products outdoors or in places where the Products are exposed to direct sunlight or dust
   [c] Use of our Products in places where the Products are exposed to sea wind or corrosive gases, including Cl_2, H_2S, NH_3, SO_2, and NO_2
   [d] Use of our Products in places where the Products are exposed to static electricity or electromagnetic waves
   [e] Use of our Products in proximity to heat-producing components, plastic cords, or other flammable items
   [f] Sealing or coating our Products with resin or other coating materials
   [g] Use of our Products without cleaning residue of flux (even if you use no-clean type fluxes, cleaning residue of flux is recommended); or Washing our Products by using water or water-soluble cleaning agents for cleaning residue after soldering
   [h] Use of the Products in places subject to dew condensation

4. The Products are not subject to radiation-proof design.

5. Please verify and confirm characteristics of the final or mounted products in using the Products.

6. In particular, if a transient load (a large amount of load applied in a short period of time, such as pulse. is applied, confirmation of performance characteristics after on-board mounting is strongly recommended. Avoid applying power exceeding normal rated power; exceeding the power rating under steady-state loading condition may negatively affect product performance and reliability.

7. De-rate Power Dissipation (Pd) depending on Ambient temperature (Ta). When used in sealed area, confirm the actual ambient temperature.

8. Confirm that operation temperature is within the specified range described in the product specification.

9. ROHM shall not be in any way responsible or liable for failure induced under deviant condition from what is defined in this document.

Precaution for Mounting / Circuit board design

1. When a highly active halogenous (chlorine, bromine, etc.) flux is used, the residue of flux may negatively affect product performance and reliability.

2. In principle, the reflow soldering method must be used on a surface-mount products, the flow soldering method must be used on a through hole mount products. If the flow soldering method is preferred on a surface-mount products, please consult with the ROHM representative in advance.

For details, please refer to ROHM Mounting specification

© 2015 ROHM Co., Ltd. All rights reserved.

Precautions Regarding Application Examples and External Circuits

1. If change is made to the constant of an external circuit, please allow a sufficient margin considering variations of the characteristics of the Products and external components, including transient characteristics, as well as static characteristics.

2. You agree that application notes, reference designs, and associated data and information contained in this document are presented only as guidance for Products use. Therefore, in case you use such information, you are solely responsible for it and you must exercise your own independent verification and judgment in the use of such information contained in this document. ROHM shall not be in any way responsible or liable for any damages, expenses or losses incurred by you or third parties arising from the use of such information.

Precaution for Electrostatic

This Product is electrostatic sensitive product, which may be damaged due to electrostatic discharge. Please take proper caution in your manufacturing process and storage so that voltage exceeding the Products maximum rating will not be applied to Products. Please take special care under dry condition (e.g. Grounding of human body / equipment / solder iron, isolation from charged objects, setting of Ionizer, friction prevention and temperature / humidity control).

Precaution for Storage / Transportation

1. Product performance and soldered connections may deteriorate if the Products are stored in the places where:
   - [a] the Products are exposed to sea winds or corrosive gases, including Cl2, H2S, NH3, SO2, and NO2
   - [b] the temperature or humidity exceeds those recommended by ROHM
   - [c] the Products are exposed to direct sunshine or condensation
   - [d] the Products are exposed to high Electrostatic

2. Even under ROHM recommended storage condition, solderability of products out of recommended storage time period may be degraded. It is strongly recommended to confirm solderability before using Products of which storage time is exceeding the recommended storage time period.

3. Store / transport cartons in the correct direction, which is indicated on a carton with a symbol. Otherwise bent leads may occur due to excessive stress applied when dropping of a carton.

4. Use Products within the specified time after opening a humidity barrier bag. Baking is required before using Products of which storage time is exceeding the recommended storage time period.

Precaution for Product Label

QR code printed on ROHM Products label is for ROHM's internal use only.

Precaution for Disposition

When disposing Products please dispose them properly using an authorized industry waste company.

Precaution for Foreign Exchange and Foreign Trade act

Since concerned goods might be fallen under listed items of export control prescribed by Foreign exchange and Foreign trade act, please consult with ROHM in case of export.

Precaution Regarding Intellectual Property Rights

1. All information and data including but not limited to application example contained in this document is for reference only. ROHM does not warrant that foregoing information or data will not infringe any intellectual property rights or any other rights of any third party regarding such information or data.

2. ROHM shall not have any obligations where the claims, actions or demands arising from the combination of the Products with other articles such as components, circuits, systems or external equipment (including software).

3. No license, expressly or implied, is granted hereby under any intellectual property rights or other rights of ROHM or any third parties with respect to the Products or the information contained in this document. Provided, however, that ROHM will not assert its intellectual property rights or other rights against you or your customers to the extent necessary to manufacture or sell products containing the Products, subject to the terms and conditions herein.

Other Precaution

1. This document may not be reprinted or reproduced, in whole or in part, without prior written consent of ROHM.

2. The Products may not be disassembled, converted, modified, reproduced or otherwise changed without prior written consent of ROHM.

3. In no event shall you use in any way whatsoever the Products and the related technical information contained in the Products or this document for any military purposes, including but not limited to, the development of mass-destruction weapons.

4. The proper names of companies or products described in this document are trademarks or registered trademarks of ROHM, its affiliated companies or third parties.

© 2015 ROHM Co., Ltd. All rights reserved.

General Precaution

1. Before you use our Products, you are requested to carefully read this document and fully understand its contents. ROHM shall not be in any way responsible or liable for failure, malfunction or accident arising from the use of any ROHM's Products against warning, caution or note contained in this document.

2. All information contained in this document is current as of the issuing date and subject to change without any prior notice. Before purchasing or using ROHM's Products, please confirm the latest information with a ROHM sales representative.

3. The information contained in this document is provided on an "as is" basis and ROHM does not warrant that all information contained in this document is accurate and/or error-free. ROHM shall not be in any way responsible or liable for any damages, expenses or losses incurred by you or third parties resulting from inaccuracy or errors of or concerning such information.

© 2015 ROHM Co., Ltd. All rights reserved.

BU2090F - Web Page

Buy

Distribution Inventory

Part Number	BU2090F
Package	SOP16
Unit Quantity	2500
Minimum Package Quantity	2500
Packing Type	Taping
Constitution Materials List	inquiry
RoHS	Yes