Smart Two Channel Highside Power Switch

Features

- Overload protection
- Current limitation
- Short circuit protection
- Thermal shutdown
- Overvoltage protection (including load dump)
- Fast demagnetization of inductive loads
- Reverse battery protection[1)]
- Undervoltage and overvoltage shutdown with auto-restart and hysteresis
- Open drain diagnostic output
- Open load detection in OFF-state
- CMOS compatible input
- Loss of ground and loss of V_{bb} protection
- **E**lectro**s**tatic **d**ischarge (**ESD**) protection

Product Summary

Overvoltage protection	$V_{bb(AZ)}$		43	V
Operating voltage	$V_{bb(on)}$		5.0 ... 34	V
	channels:	each	both parallel	
On-state resistance	R_{ON}	200	100	mΩ
Load current (ISO)	$I_{L(ISO)}$	2.3	4.4	A
Current limitation	$I_{L(SCr)}$	4	4	A

TO-220AB/7

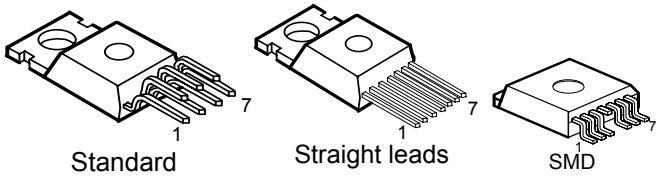

Application

- µC compatible power switch with diagnostic feedback for 12 V and 24 V DC grounded loads
- All types of resistive, inductive and capacitve loads
- Replaces electromechanical relays, fuses and discrete circuits

General Description

N channel vertical power FET with charge pump, ground referenced CMOS compatible input and diagnostic feedback, monolithically integrated in Smart SIPMOS® technology. Providing embedded protective functions.

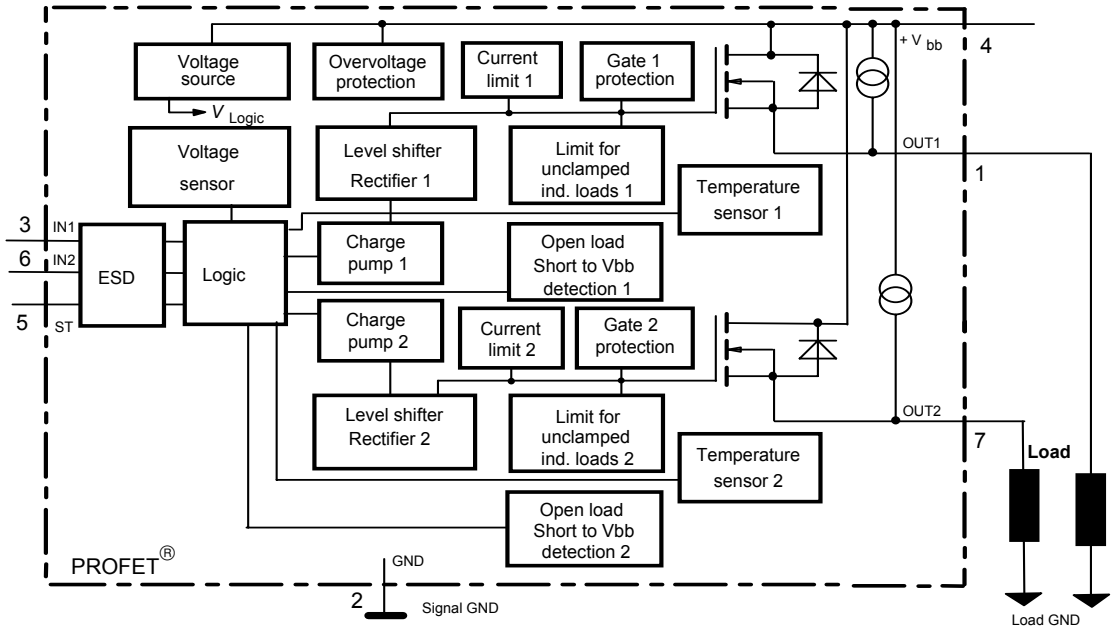

1) With external current limit (e.g. resistor R_{GND}=150 Ω) in GND connection, resistor in series with ST connection, reverse load current limited by connected load.

Pin	Symbol	Function
1	OUT1 (Load, L)	Output 1, protected high-side power output of channel 1
2	GND	Logic ground
3	IN1	Input 1, activates channel 1 in case of logical high signal
4	Vbb	Positive power supply voltage, the tab is shorted to this pin
5	ST	Diagnostic feedback: open drain, low on failure
6	IN2	Input 2, activates channel 2 in case of logical high signal
7	OUT2 (Load, L)	Output 2, protected high-side power output of channel 2

Maximum Ratings at T_j = 25 °C unless otherwise specified

Parameter	Symbol	Values	Unit
Supply voltage (overvoltage protection see page 4)	V_{bb}	43	V
Supply voltage for full short circuit protection $T_{j\,Start}$=-40 ...+150°C	V_{bb}	34	V
Load dump protection[2] $V_{LoadDump} = U_A + V_s$, U_A = 13.5 V R_I[3]= 2 Ω, R_L= 5.3 Ω, t_d= 200 ms, IN= low or high	$V_{Load\,dump}$[4]	60	V
Load current (Short circuit current, see page 5)	I_L	self-limited	A
Operating temperature range Storage temperature range	T_j T_{stg}	-40 ...+150 -55 ...+150	°C
Power dissipation (DC), $T_C \leq 25$ °C	P_{tot}	36	W
Inductive load switch-off energy dissipation, single pulse V_{bb} = 12V, $T_{j,start}$ = 150°C, T_C = 150°C const. one channel, I_L = 2.3 A, Z_L = 89 mH, 0 Ω: both channels parallel, I_L = 4.4 A, Z_L = 47 mH, 0 Ω: see diagrams on page 9	E_{AS}	 290 580	 mJ
Electrostatic discharge capability (ESD) IN: (Human Body Model) all other pins: acc. MIL-STD883D, method 3015.7 and ESD assn. std. S5.1-1993	V_{ESD}	1.0 2.0	kV
Input voltage (DC)	V_{IN}	-10 ... +16	V
Current through input pin (DC)	I_{IN}	±2.0	mA
Current through status pin (DC) see internal circuit diagrams page 7	I_{ST}	±5.0	

2) Supply voltages higher than $V_{bb(AZ)}$ require an external current limit for the GND and status pins, e.g. with a 150 Ω resistor in the GND connection and a 15 kΩ resistor in series with the status pin. A resistor for the protection of the input is integrated.

3) R_I = internal resistance of the load dump test pulse generator

4) $V_{Load\,dump}$ is setup without the DUT connected to the generator per ISO 7637-1 and DIN 40839

Thermal Characteristics

Parameter and Conditions	Symbol	Values			Unit
		min	typ	max	
Thermal resistance chip - case, both channels:	R_{thJC}	--	--	3.5	K/W
each channel:		--	--	7.0	
junction - ambient (free air):	R_{thJA}	--	--	75	
SMD version, device on PCB[5]:			37		

Electrical Characteristics

Parameter and Conditions, each channel at T_j = 25 °C, V_{bb} = 12 V unless otherwise specified	Symbol	Values			Unit
		min	typ	max	
Load Switching Capabilities and Characteristics					
On-state resistance (pin 4 to 1 or 7)					
I_L = 1.8 A T_j=25 °C:	R_{ON}	--	160	200	mΩ
each channel T_j=150 °C:			320	400	
Nominal load current, ISO Norm (pin 4 to 1 or 7)					
V_{ON} = 0.5 V, T_C = 85 °C each channel:	$I_{L(ISO)}$	1.8	2.3	--	A
both channels parallel:		3.5	4.4	--	
Output current (pin 1 or 7) while GND disconnected or GND pulled up, V_{bb}=30 V, V_{IN}= 0, see diagram page 8	$I_{L(GNDhigh)}$	--	--	10	mA
Turn-on time IN ⌐‾ to 90% V_{OUT}:	t_{on}	80	200	400	µs
Turn-off time IN ‾⌐ to 10% V_{OUT}:	t_{off}	80	200	400	
R_L = 12 Ω, T_j =-40...+150°C					
Slew rate on	dV /dt_{on}	0.1	--	1	V/µs
10 to 30% V_{OUT}, R_L = 12 Ω, T_j =-40...+150°C					
Slew rate off	-dV/dt_{off}	0.1	--	1	V/µs
70 to 40% V_{OUT}, R_L = 12 Ω, T_j =-40...+150°C					

5) Device on 50mm*50mm*1.5mm epoxy PCB FR4 with 6cm² (one layer, 70µm thick) copper area for V_{bb} connection. PCB is vertical without blown air.

Parameter and Conditions, each channel at T_j = 25 °C, V_{bb} = 12 V unless otherwise specified	**Symbol**	**Values**			**Unit**
		min	typ	max	
Operating Parameters					
Operating voltage[6] T_j =-40...+150°C:	$V_{bb(on)}$	5.0	--	34	V
Undervoltage shutdown T_j =-40...+150°C:	$V_{bb(under)}$	3.5	--	5.0	V
Undervoltage restart T_j =-40...+25°C: T_j =+150°C:	$V_{bb(u\ rst)}$	--	--	5.0 7.0	V
Undervoltage restart of charge pump see diagram page 12	$V_{bb(ucp)}$	--	5.6	7.0	V
Undervoltage hysteresis $\Delta V_{bb(under)} = V_{bb(u\ rst)} - V_{bb(under)}$	$\Delta V_{bb(under)}$	--	0.2	--	V
Overvoltage shutdown T_j =-40...+150°C:	$V_{bb(over)}$	34	--	43	V
Overvoltage restart T_j =-40...+150°C:	$V_{bb(o\ rst)}$	33	--	--	V
Overvoltage hysteresis T_j =-40...+150°C:	$\Delta V_{bb(over)}$	--	0.5	--	V
Overvoltage protection[7] T_j =-40...+150°C: I_{bb}=40 mA	$V_{bb(AZ)}$	42	47	--	V
Standby current (pin 4), V_{IN}=0 T_j=-40...+150°C:	$I_{bb(off)}$	-- --	90	150	µA
Operating current (Pin 2)[8], V_{IN}=5 V both channels on, T_j =-40...+150°C,	I_{GND}	--	0.6	1.2	mA
Operating current (Pin 2)[8] one channel on, T_j =-40...+150°C:,	I_{GND}	--	0.4	0.7	mA

6) At supply voltage increase up to V_{bb}= 5.6 V typ without charge pump, $V_{OUT} \approx V_{bb}$ - 2 V

7) See also $V_{ON(CL)}$ in table of protection functions and circuit diagram page 8.

8) Add I_{ST}, if I_{ST} > 0, add I_{IN}, if V_{IN}>5.5 V

Parameter and Conditions, each channel at T_j = 25 °C, V_{bb} = 12 V unless otherwise specified	**Symbol**	**Values**			**Unit**
		min	typ	max	
Protection Functions[9]					
Initial peak short circuit current limit (pin 4 to 1 or 7)	$I_{L(SCp)}$				
T_j =-40°C:		5.5	9.5	13	A
T_j =25°C:		4.5	7.5	11	
T_j =+150°C:		2.5	4.5	7	
Repetitive short circuit shutdown current limit $T_j = T_{jt}$ (see timing diagrams, page 11)	$I_{L(SCr)}$	--	4	--	A
Output clamp (inductive load switch off) at $V_{OUT} = V_{bb} - V_{ON(CL)}$ I_L= 40 mA:	$V_{ON(CL)}$	41	47	53	V
Thermal overload trip temperature	T_{jt}	150	--	--	°C
Thermal hysteresis	ΔT_{jt}	--	10	--	K
Reverse battery (pin 4 to 2) [10]	$-V_{bb}$	--	--	32	V
Reverse battery voltage drop ($V_{out} > V_{bb}$) I_L = -1.9 A, each channel T_j=150 °C:	$-V_{ON(rev)}$	--	610	--	mV
Diagnostic Characteristics					
Open load detection current (included in standby current $I_{bb(off)}$)	$I_{L(off)}$	--	30	--	µA
Open load detection voltage T_j=-40..150°C:	$V_{OUT(OL)}$	2	3	4	V

9) Integrated protection functions are designed to prevent IC destruction under fault conditions described in the data sheet. Fault conditions are considered as "outside" normal operating range. Protection functions are not designed for continuous repetitive operation.

10) Requires 150 Ω resistor in GND connection. The reverse load current through the intrinsic drain-source diode has to be limited by the connected load. Note that the power dissipation is higher compared to normal operating conditions due to the voltage drop across the intrinsic drain-source diode. The temperature protection is not active during reverse current operation! Input and Status currents have to be limited (see max. ratings page 2 and circuit page 8).

Parameter and Conditions, each channel at T_j = 25 °C, V_{bb} = 12 V unless otherwise specified	**Symbol**	**Values**			**Unit**
		min	typ	max	
Input and Status Feedback[11)]					
Input resistance T_j=-40..150°C, see circuit page 7	R_I	2.5	3.5	6	kΩ
Input turn-on threshold voltage T_j =-40..+150	$V_{IN(T+)}$	1.7	--	3.5	V
Input turn-off threshold voltage T_j =-40..+150°	$V_{IN(T-)}$	1.5	--	--	V
Input threshold hysteresis	$\Delta V_{IN(T)}$	--	0.5	--	V
Off state input current (pin 3 or 6), V_{IN} = 0.4 V, T_j =-40..+150°C	$I_{IN(off)}$	1	--	50	µA
On state input current (pin 3 or 6), V_{IN} = 3.5 V, T_j =-40..+150°C	$I_{IN(on)}$	20	50	90	µA
Delay time for status with open load after Input neg. slope (see diagram page 12)	$t_{d(ST\ OL3)}$	--	220	--	µs
Status output (open drain)					
Zener limit voltage T_j =-40...+150°C, I_{ST} = +1.6 mA:	$V_{ST(high)}$	5.4	6.1	--	V
ST low voltage T_j =-40...+25°C, I_{ST} = +1.6 mA:	$V_{ST(low)}$	--	--	0.4	
T_j = +150°C, I_{ST} = +1.6 mA:		--	--	0.6	

11) If a ground resistor R_{GND} is used, add the voltage drop across this resistor.

Truth Table

		IN1	IN2	OUT1	OUT2	ST BTS611L1	ST **BTS612N1**
Normal operation		**L**	**L**	**L**	**L**	H	**H**
		L	**H**	**L**	**H**	H	**H**
		H	**L**	**H**	**L**	H	**H**
		H	**H**	**H**	**H**	H	**H**
Open load	Channel 1	**L**	**L**	**Z**	**L**	H(L[12])	**L**
		L	**H**	**Z**	**H**	H	**H**
		H	**X**	**H**	**X**	L	**H**
	Channel 2	**L**	**L**	**L**	**Z**	H(L[12])	**L**
		H	**L**	**H**	**Z**	H	**H**
		X	**H**	**X**	**H**	L	**H**
Short circuit to V_{bb}	Channel 1	**L**	**L**	**H**	**L**	L[13]	**L**
		L	**H**	**H**	**H**	H	**H**
		H	**X**	**H**	**X**	H(L[14])	**H**
	Channel 2	**L**	**L**	**L**	**H**	L[13]	**L**
		H	**L**	**H**	**H**	H	**H**
		X	**H**	**X**	**H**	H(L[14])	**H**
Overtemperature	both channel	**L**	**L**	**L**	**L**	H	**H**
		X	**H**	**L**	**L**	L	**L**
		H	**X**	**L**	**L**	L	**L**
	Channel 1	**L**	**X**	**L**	**X**	H	**H**
		H	**X**	**L**	**X**	L	**L**
	Channel 2	**X**	**L**	**X**	**L**	H	**H**
		X	**H**	**X**	**L**	L	**L**
Undervoltage/ Overvoltage		**X**	**X**	**L**	**L**	H	**H**

L = "Low" Level X = don't care Z = high impedance, potential depends on external circuit
H = "High" Level Status signal after the time delay shown in the diagrams (see fig 5. page 12)

Terms

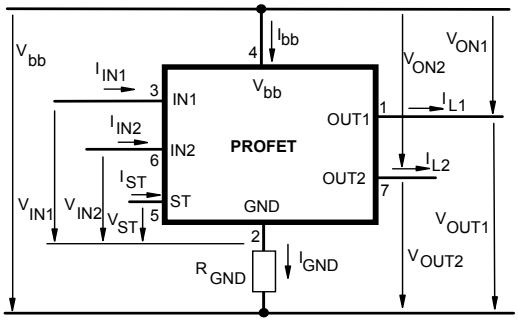

Input circuit (ESD protection)

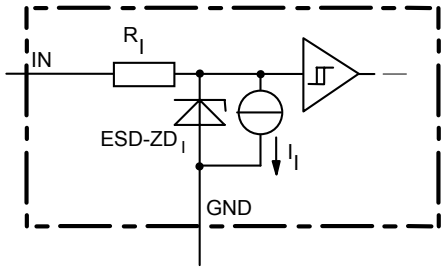

ESD zener diodes are not to be used as voltage clamp at DC conditions. Operation in this mode may result in a drift of the zener voltage (increase of up to 1 V).

12) With additional external pull up resistor

13) An external short of output to V_{bb}, in the off state, causes an internal current from output to ground. If R_{GND} is used, an offset voltage at the GND and ST pins will occur and the $V_{ST\ low}$ signal may be errorious.

14) Low resistance to V_{bb} may be detected in the ON-state by the no-load-detection

Status output

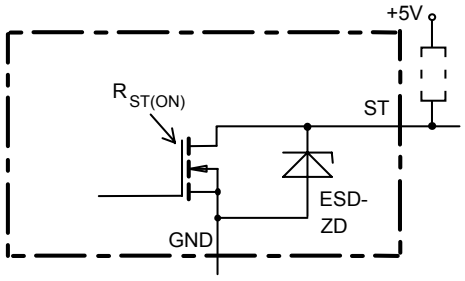

ESD-Zener diode: 6.1 V typ., max 5 mA;
$R_{ST(ON)}$ < 380 Ω at 1.6 mA, ESD zener diodes are not to be used as voltage clamp at DC conditions.
Operation in this mode may result in a drift of the zener voltage (increase of up to 1 V).

Inductive and overvoltage output clamp

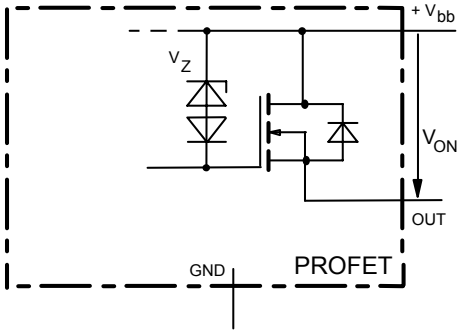

V_{ON} clamped to 47 V typ.

Overvolt. and reverse batt. protection

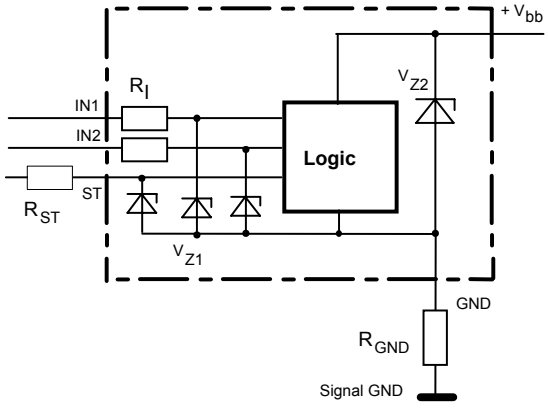

V_{Z1} = 6.1 V typ., V_{Z2} = 47 V typ., R_I= 3.5 kΩ typ,
R_{GND}= 150 Ω

Open-load detection

OFF-state diagnostic condition: V_{OUT} > 3 V typ.; IN low

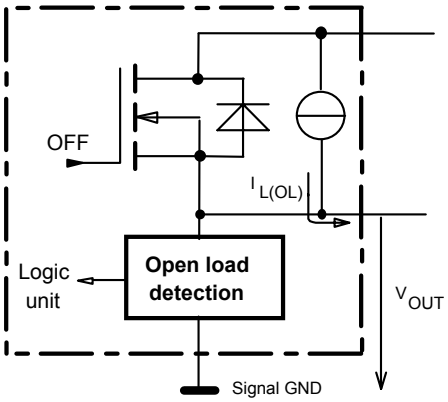

GND disconnect

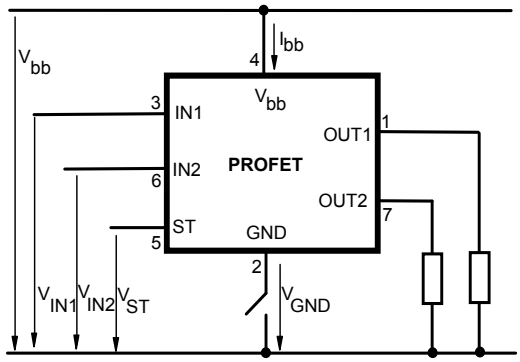

Any kind of load. In case of Input=high is $V_{OUT} \approx V_{IN} - V_{IN(T+)}$.
Due to V_{GND} >0, no V_{ST} = low signal available.

GND disconnect with GND pull up

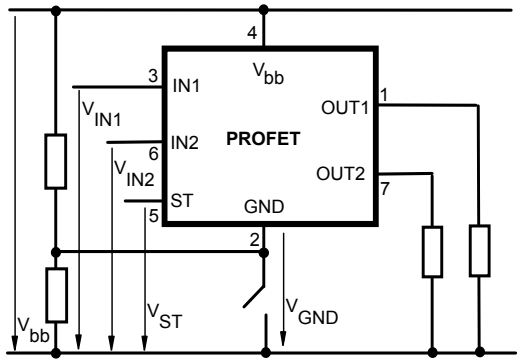

Any kind of load. If $V_{GND} > V_{IN} - V_{IN(T+)}$ device stays off
Due to V_{GND} >0, no V_{ST} = low signal available.

V_{bb} disconnect with energized inductive load

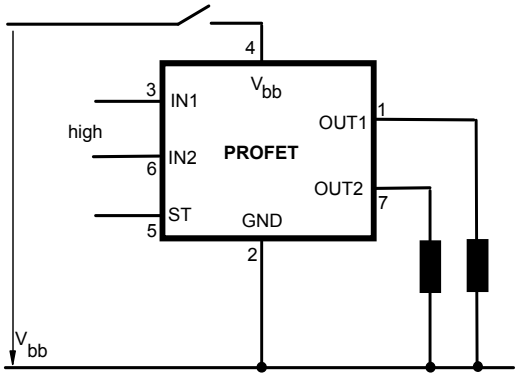

Normal load current can be handled by the PROFET itself.

V_{bb} disconnect with charged external inductive load

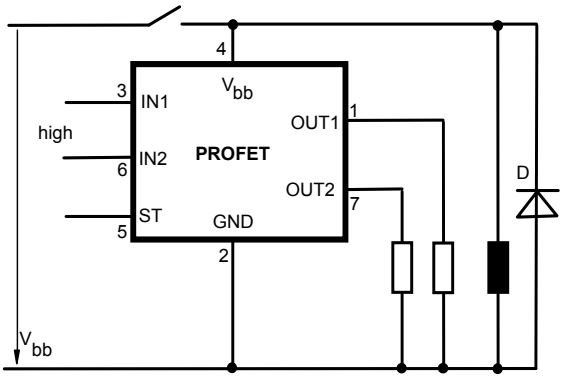

If other external inductive loads L are connected to the PROFET, additional elements like D are necessary.

Inductive Load switch-off energy dissipation

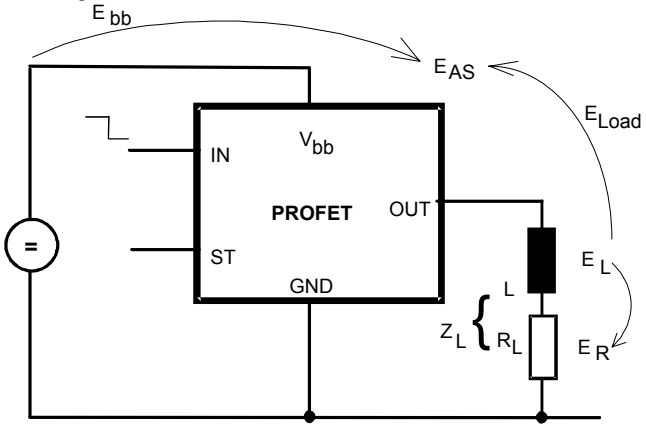

Energy stored in load inductance:

$$E_L = {}^1/_2 \cdot L \cdot I_L^2$$

While demagnetizing load inductance, the energy dissipated in PROFET is

$$E_{AS} = E_{bb} + E_L - E_R = \int V_{ON(CL)} \cdot i_L(t)\, dt,$$

with an approximate solution for $R_L > 0\,\Omega$:

$$E_{AS} = \frac{I_L \cdot L}{2 \cdot R_L} \cdot (V_{bb} + |V_{OUT(CL)}|) \cdot ln\,(1 + \frac{I_L \cdot R_L}{|V_{OUT(CL)}|})$$

Maximum allowable load inductance for a single switch off (both channels parallel)

$L = f(I_L)$; $T_{j,start} = 150°C$, $T_C = 150°C$ const., $V_{bb} = 12\,V$, $R_L = 0\,\Omega$

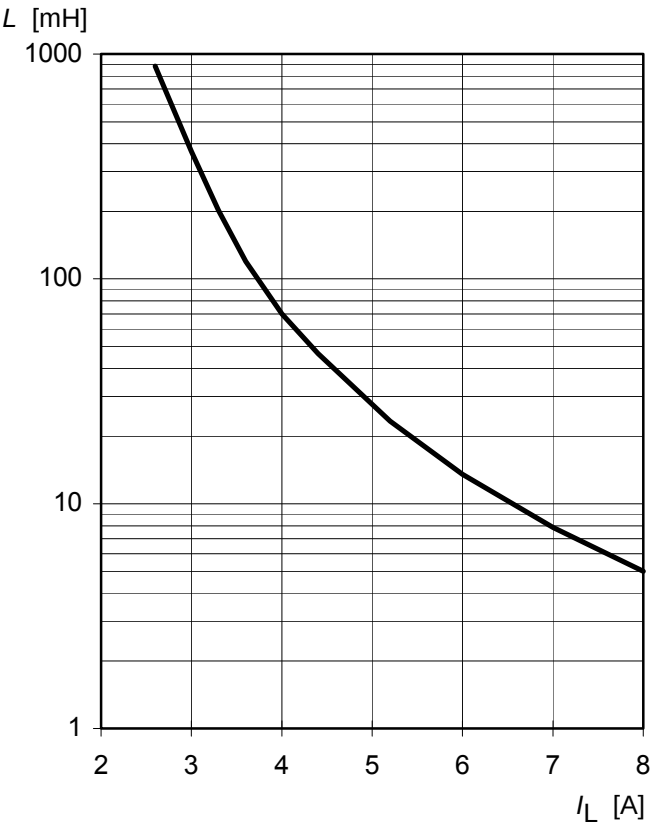

Typ. transient thermal impedance chip case

$Z_{thJC} = f(t_p)$, one Channel active

Z_{thJC} [K/W]

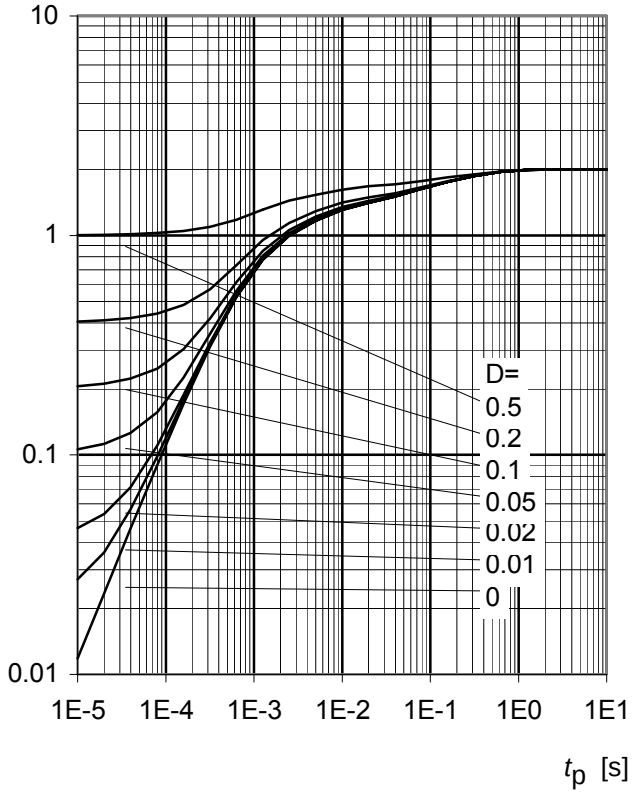

Transient thermal impedance chip case

$Z_{thJC} = f(t_p)$, both Channel active

Z_{thJC} [K/W]

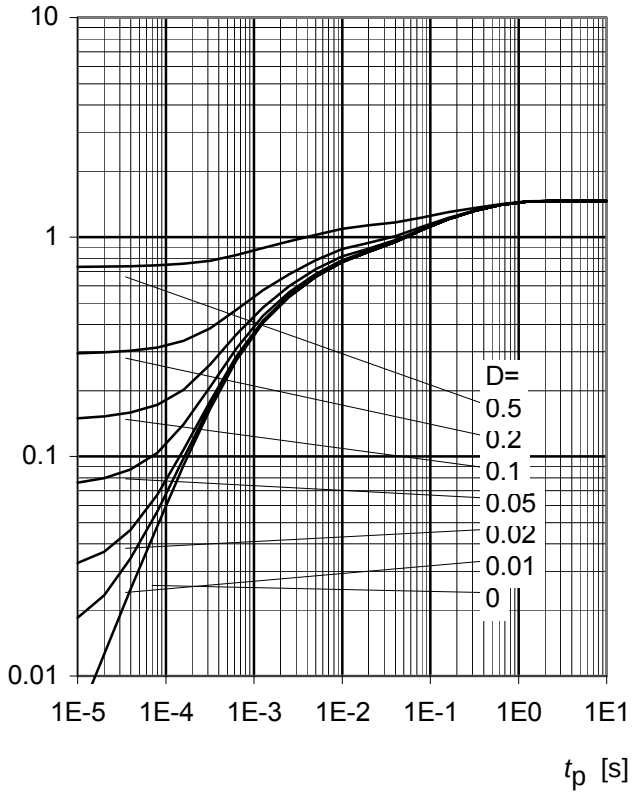

Timing diagrams

Both channels are symmetric and consequently the diagrams are valid for each channel as well as for permuted channels

Figure 1a: V_{bb} turn on:

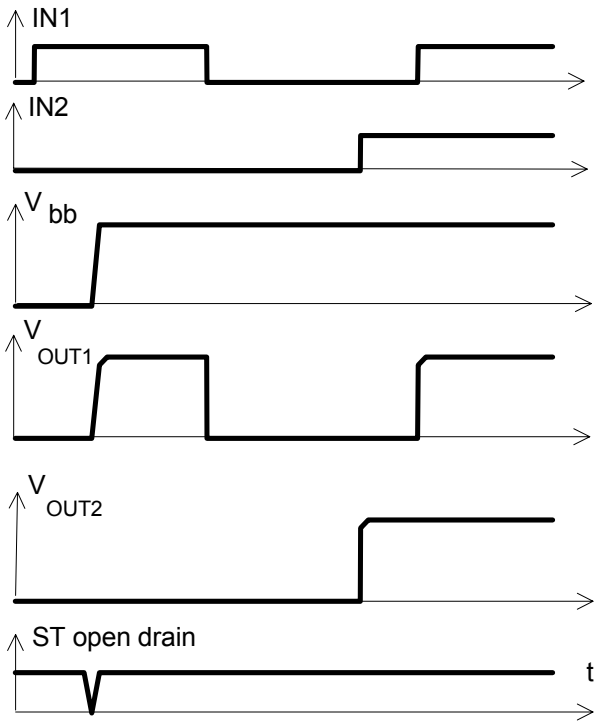

Figure 2a: Switching a lamp:

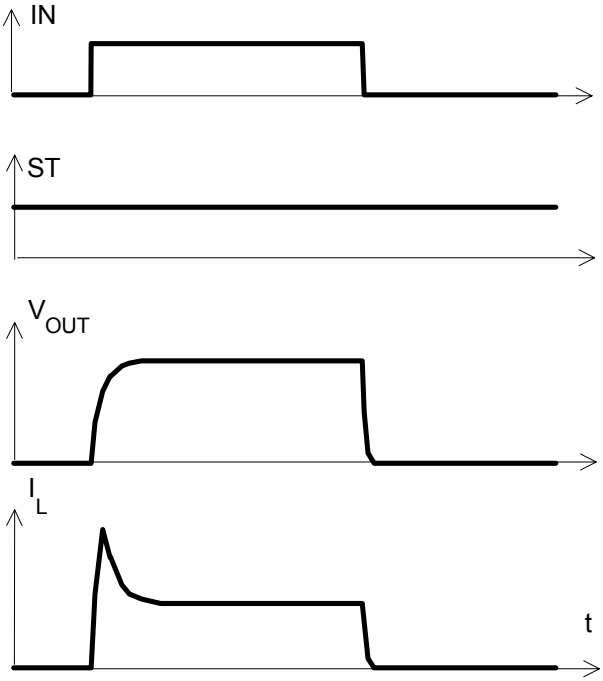

Figure 2b: Switching an inductive load

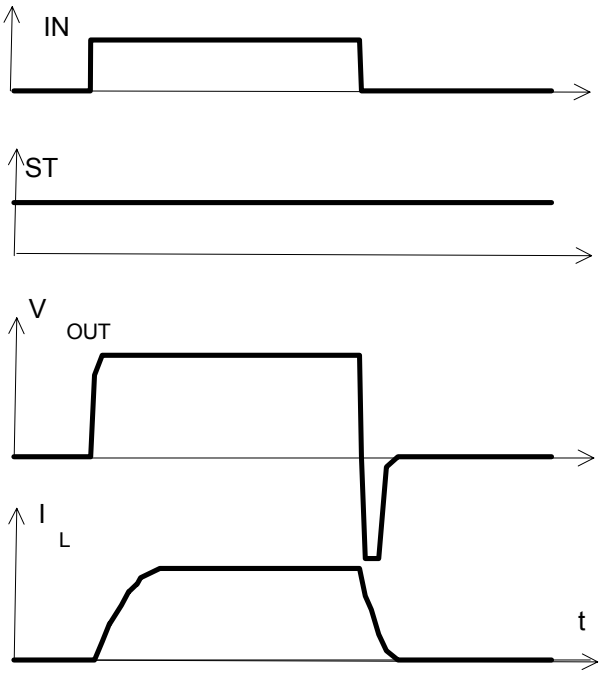

Figure 3a: Short circuit
shut down by overtempertature, reset by cooling

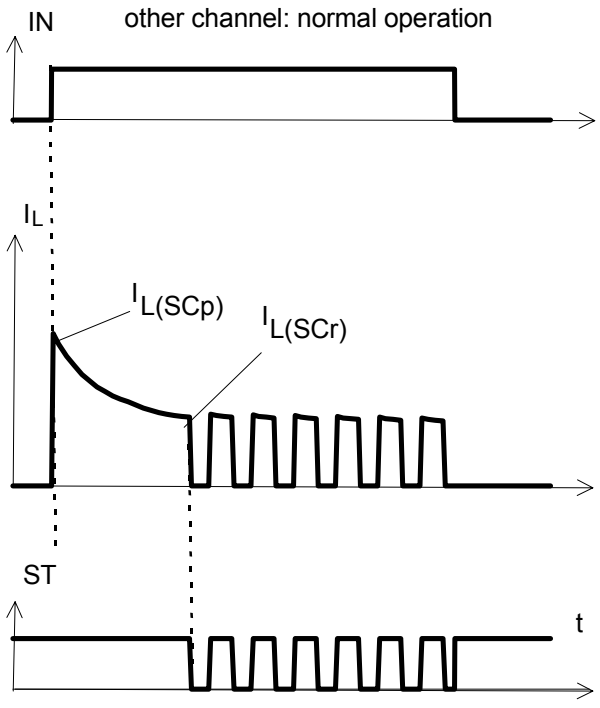

Heating up may require several milliseconds, depending on external conditions

Figure 4a: Overtemperature:
Reset if $T_j < T_{jt}$

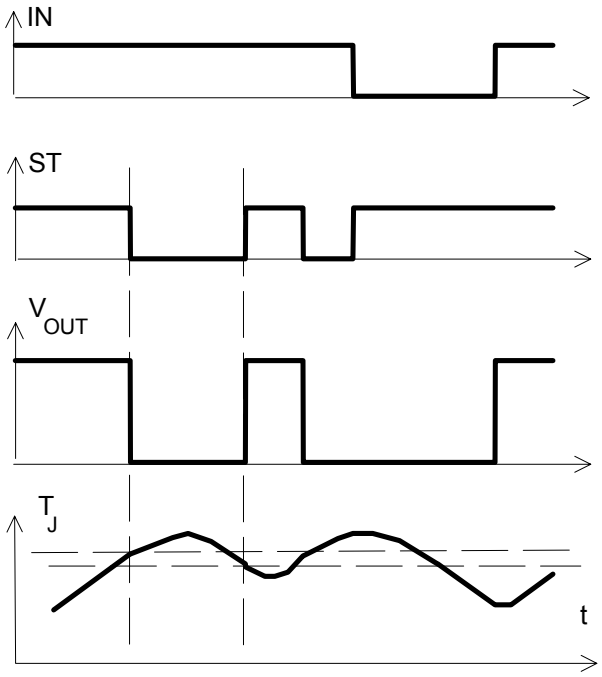

Figure 5a: Open load: detection in OFF-state, turn on/off to open load

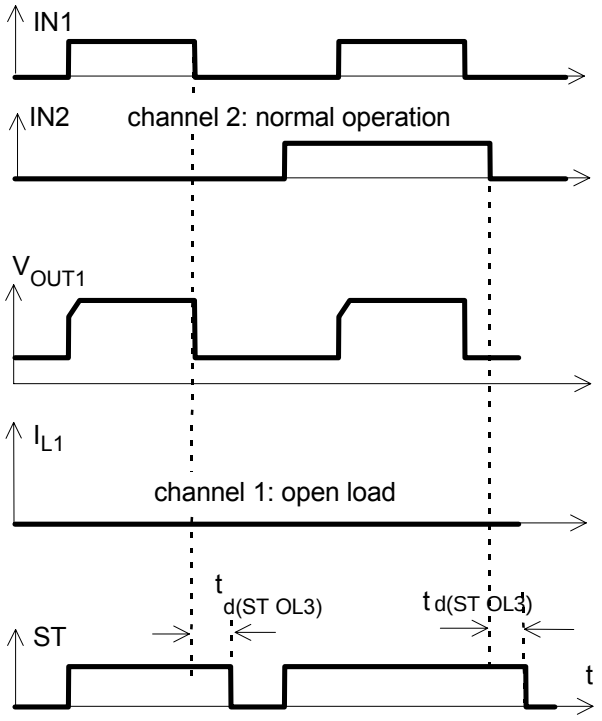

$t_{d(ST,OL3)}$ depends on external circuitry because of high impedance

*) I_L = 30 µA typ

Figure 6a: Undervoltage:

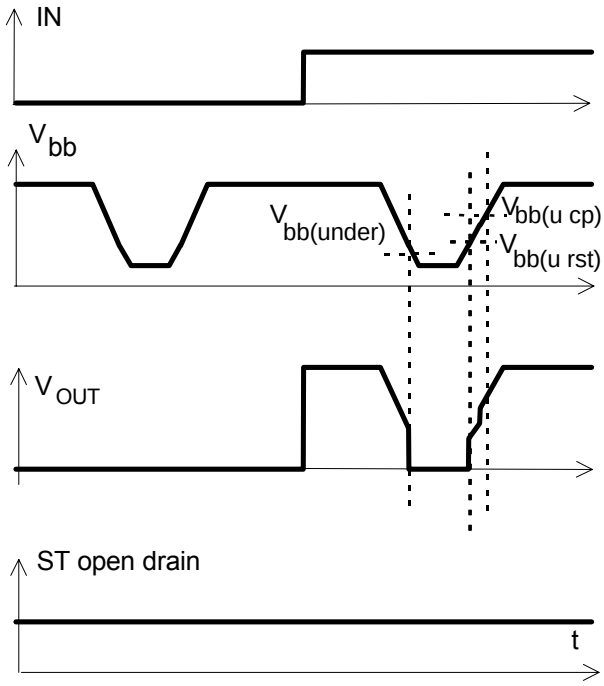

Figure 6b: Undervoltage restart of charge pump

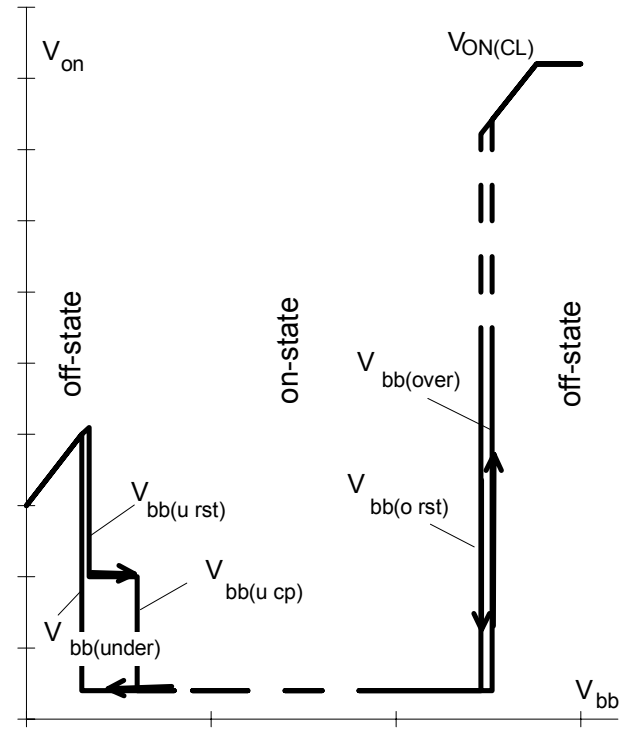

charge pump starts at $V_{bb(ucp)}$ =5.6 V typ.

Figure 7a: Overvoltage:

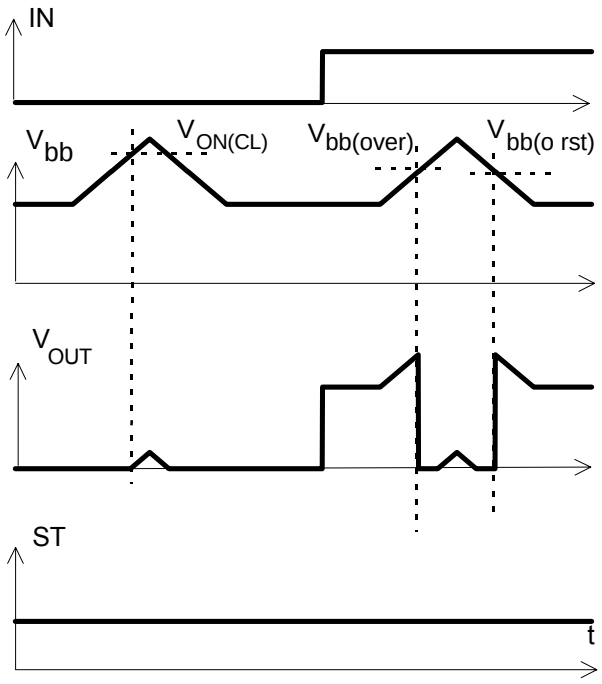

Package and Ordering Code

All dimensions in mm

Standard TO-220AB/7 Ordering code

BTS612N1	Q67060-S6303-A2

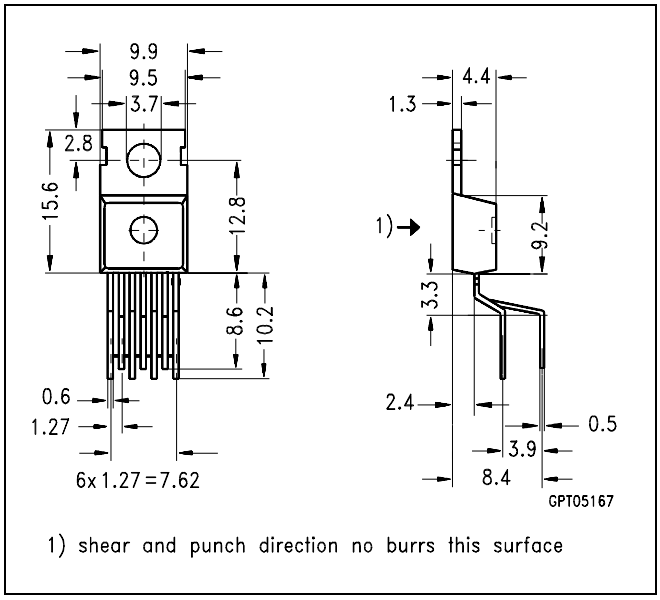

1) shear and punch direction no burrs this surface

TO 220AB/7, Opt. E3230 Ordering code

BTS612N1 E3230	Q67060-S6303-A3

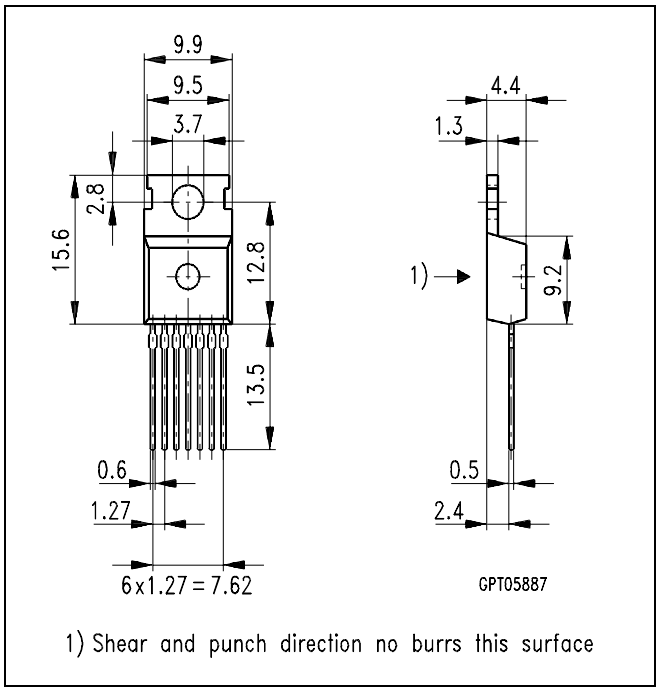

1) Shear and punch direction no burrs this surface

SMD TO 220AB/7, Opt. E3128 Ordering code

BTS612N1 E3128A	T&R: Q67060-S6303-A4

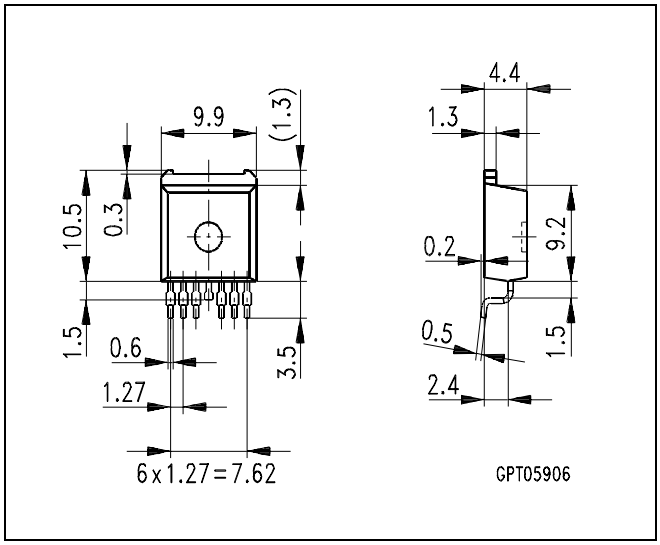

Changed since 04.96

Date	Change
Dec 1996	$t_{d(ST\ OL4)}$ max reduced from 1500 to 800µs, typical from 400 to 320µs, min limit unchanged
	E_{AS} maximum rating and diagram and Z_{thJC} diagram added
	ESD capability increased
	Typ. reverse battery voltage drop - $V_{ON(rev)}$ added

Published by
Infineon Technologies AG,
St.-Martin-Strasse 53,
D-81669 München
© Infineon Technologies AG 2001
All Rights Reserved.

Attention please!

The information herein is given to describe certain components and shall not be considered as a guarantee of characteristics.

Terms of delivery and rights to technical change reserved.

We hereby disclaim any and all warranties, including but not limited to warranties of non-infringement, regarding circuits, descriptions and charts stated herein.

Infineon Technologies is an approved CECC manufacturer.

Information

For further information on technology, delivery terms and conditions and prices please contact your nearest Infineon Technologies Office in Germany or our Infineon Technologies Representatives worldwide (see address list).

Warnings

Due to technical requirements components may contain dangerous substances. For information on the types in question please contact your nearest Infineon Technologies Office.

Infineon Technologies Components may only be used in life-support devices or systems with the express written approval of Infineon Technologies, if a failure of such components can reasonably be expected to cause the failure of that life-support device or system, or to affect the safety or effectiveness of that device or system. Life support devices or systems are intended to be implanted in the human body, or to support and/or maintain and sustain and/or protect human life. If they fail, it is reasonable to assume that the health of the user or other persons may be endangered.