BTR-7710G / BTR-7710-SPG / BTR-7710AG / BTR-7710A-SPG

1550 nm TX / 1310 nm RX , 3.3V / 1.25 Gb/s RoHS Compliant Single-Fiber Transceiver

FEATURES

- Single Fiber Bi-Directional Transceiver
- 1550 nm DFB LD Transmitter
- 1310 nm Receiver
- Link distance up to 20 km
- Industry Standard 1 x 9 Footprint
- Single +3.3 V Power Supply
- RoHS Compliant
- 0 to 70°C Operating: BTR-7710G
- -20 to 85°C Operating: BTR-7710AG
- LVPECL Differential Inputs and Outputs
- LVPECL Signal Detect Output: BTR-7710G
- LVTTL Signal Detect Output: BTR-7710CG
- Wave Solderable and Aqueous Washable
- Class 1 Laser International Safety Standard IEC-60825 Compliant

APPLICATIONS

- WDM 1.25 Gb/s Links
- SONET/SDH Equipment Interconnect
- Fiber Channel 1.063 Gb/s Links

DESCRIPTION

The BTR-7710G series is high performance module for single fiber communications by using 1550 nm transmitter and 1310 nm receiver. The transmitter section uses a multiple quantum well 1550 nm DFB laser and is a class 1 laser compliant according to International Safety Standard IEC-60825. The receiver section uses an integrated 1310 nm detector preamplifier (IDP) mounted in an optical header and a limiting post-amplifier IC. A PECL logic interface simplifies interface to external circuitry.

LASER SAFETY

This single mode transceiver is a Class 1 laser product. It complies with IEC-60825 and FDA 21 CFR 1040.10 and 1040.11. The transceiver must be operated within the specified temperature and voltage limits. The optical ports of the module shall be terminated with an optical connector or with a dust plug.

ORDER INFORMATION

P/No.	Bit Rate (Gb/s)	Distance (km)	TX (nm)	RX (nm)	Voltage (V)	Package	Temp (°C)	TX Power (dBm)	RX Sens. (dBm)	Signal Detect	RoHS Compliant
BTR-7710CG	1.25	10	1550 DFB	1310	3.3	1X9	0 to 70	-3 to -9	-20	TTL	Yes
BTR-7710ACG	1.25	10	1550 DFB	1310	3.3	1X9	-20 to 85	-3 to -9	-20	TTL	Yes
BTR-7710G	1.25	10	1550 DFB	1310	3.3	1X9	0 to 70	-3 to -9	-20	PECL	Yes
BTR-7710AG	1.25	10	1550 DFB	1310	3.3	1X9	-20 to 85	-3 to -9	-20	PECL	Yes

Note: 1. BTR-XXXXXG is 1X9 SC receptacle type package.

2. BTR-XXXXX-APBBBG is 1X9 pigtail type package with different connector, A=S is SC connector, A=F is FC connector, A=T is ST connector, A=L is LC connector, A=M is MU connector; BBB is the length of fiber in cm.

OPTOWAY TECHNOLOGY INC. No.38, Kuang Fu S. Road, Hu Kou, Hsin Chu Industrial Park, Hsin Chu, Taiwan 303
Tel: 886-3-5979798 Fax: 886-3-5979737
E-mail: sales@optoway.com.tw http: // www.optoway.com.tw 10/1/2005 V2.0

Absolute Maximum Ratings					
Parameter	**Symbol**	**Min**	**Max**	**Units**	**Notes**
Storage Temperature	Tstg	-40	85	°C	
Operating Temperature	Topr	0 -20	70 85	°C	BTR-7710G BTR-7710AG
Soldering Temperature	---		260	°C	10 seconds on leads only
Power Supply Voltage	Vcc	0	4.5	V	
Input Voltage	---	GND	Vcc	V	
Output Current	Iout	0	30	mA	

Recommended Operating Conditions					
Parameter	**Symbol**	**Min**	**Typ**	**Max**	**Units**
Power Supply Voltage	Vcc	3.13	3.3	3.47	V
Operating Temperature	Topr	0 -20		70 85	°C / BTR-7710G °C / BTR-7710AG
Data Rate			1250	1300	Mb/s
Power Supply Current	Icc			280	mA

Transmitter Specifications (0°C < Topr < 70°C, 3.13V < Vcc < 3.47V)						
Parameter	**Symbol**	**Min**	**Typ**	**Max**	**Units**	**Notes**
Optical						
Optical Transmit Power	Po	-9	---	-3	dBm	1
Output Center Wavelength	λ	1480		1580	nm	
Output Spectrum Width	Δλ	---	---	1	nm	-20 dB width
Side Mode Suppression Ratio	SMSR	30			dB	
Extinction Ratio	E_R	9.0	---	---	dB	
Output Eye	Compliant with IEEE 802.3z					
Optical Rise Time	t_r			0.26	ns	20% to 80% Values
Optical Fall Time	t_f			0.26	ns	20% to 80% Values
Relative Intensity Noise	RIN			-120	dB/Hz	
Total Jitter	TJ			0.227	ns	2
Electrical						
Data Input Current – Low	I_{IL}	-350			μA	
Data Input Current – High	I_{IH}			350	μA	
Differential Input Voltage	V_{IH} - V_{IL}	300			mV	
Data Input Voltage – Low	V_{IL} - V_{CC}	-2.0		-1.58	V	3
Data Input Voltage -- High	V_{IH} - V_{CC}	-1.1		-0.74	V	3

Notes: 1. Output power is power coupled into a 9/125 μm single mode fiber.

2. Measured with a 2^7-1 PRBS.

3. These inputs are compatible with 10K, 10KH and 100K ECL and LVPECL inputs.

Receiver Specifications (0^oC < Topr < 70^oC, 3.15 V < Vcc < 3. 47V)						
Parameter	**Symbol**	**Min**	**Typ**	**Max**	**Units**	**Notes**
Optical						
Sensitivity	---	---	---	-20	dBm	1
Maximum Input Power	Pin	-3		---	dBm	
Signal Detect -- Asserted	Pa	---	---	-20	dBm	Transition: low to high
Signal Detect -- Deasserted	Pd	-31	---	---	dBm	Transition: high to low
Signal detect -- Hysteresis		1.0	---		dB	
Wavelength of Operation		1260		1360	nm	2
Optical Return Loss	ORL	14			dB	
Electrical						
Data Output Voltage – Low	V_{OL} - V_{CC}	-2.0		-1.58	V	3
Data Output Voltage – High	V_{OH} - V_{CC}	-1.1		-0.74	V	3
SD Output Voltage -- Low	V_{OL} - V_{CC}	-2.0		-1.58	V	BTR-7710G
SD Output Voltage -- High	V_{OH} - V_{CC}	-1.1		-0.74	V	
SD Output Voltage -- Low	V_{OL}	0		0.8	V	BTR-7710CG
SD Output Voltage -- High	V_{OH}	2.0		Vcc+0.3	V	

Notes: 1. Minimum sensitivity and saturation levels at BER=1E-12 for a 2^7-1 PRBS.

2. At least 30 dB optical isolation for the wavelength 1480 to 1580 nm.

3. These outputs are compatible with 10K, 10KH and 100K ECL and LVPECL outputs.

CONNECTION DIAGRAM

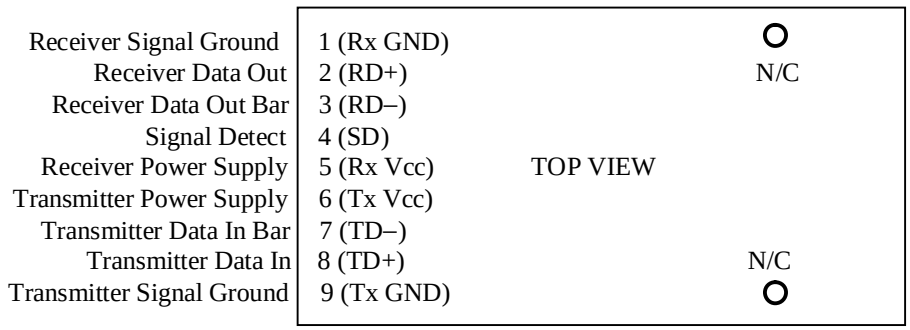

PIN	Symbol	Notes
1	Rx GND	Directly connect this pin to the receiver ground plane
2	RD+	See recommended circuit schematic
3	RD–	See recommended circuit schematic
4	SD	Active high on this indicates a received optical signal
5	Rx Vcc	+3.3V dc power for the receiver section
6	Tx Vcc	+3.3V dc power for the transmitter section
7	TD–	See recommended circuit schematic
8	TD+	See recommended circuit schematic
9	Tx GND	Directly connect this plan to the trransmitter ground plane

RECOMMENDED CIRCUIT SCHEMATIC

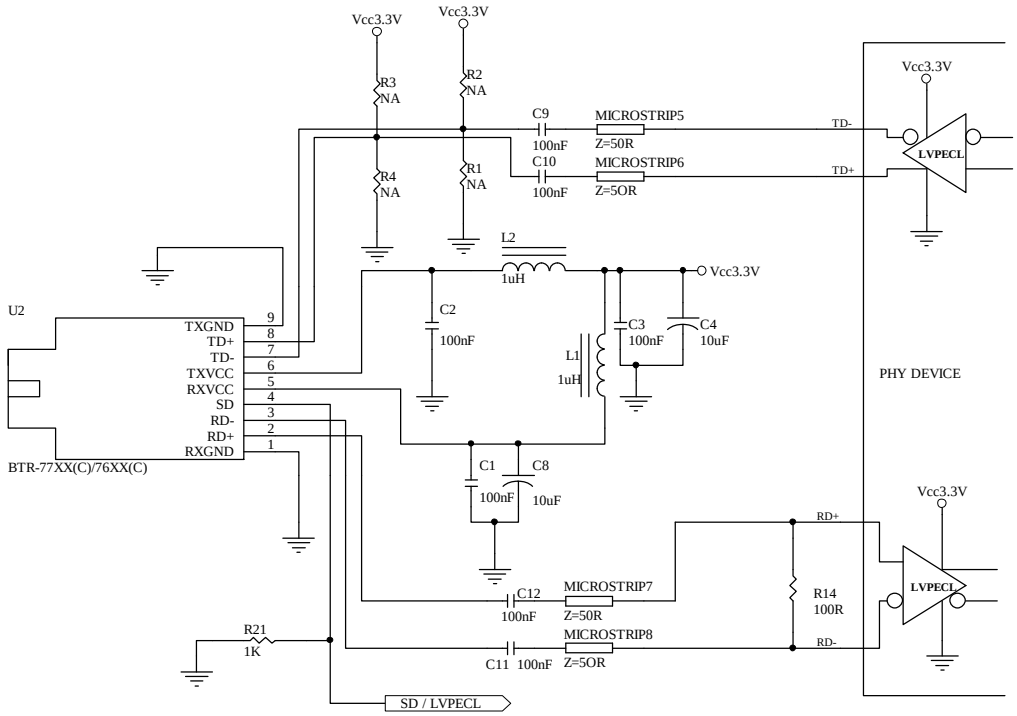

The split-load terminations for ECL signals need to be located at the input of devices receiving those ECL signals. The power supply filtering is required for good EMI performance. Use short tracks from the inductor L1/L2 to the module Rx Vcc and Tx Vcc. A GND plane under the module is required for good EMI and sensitivity performance.

PACKAGE DIAGRAM

Units in mm

1) Pigtail Type

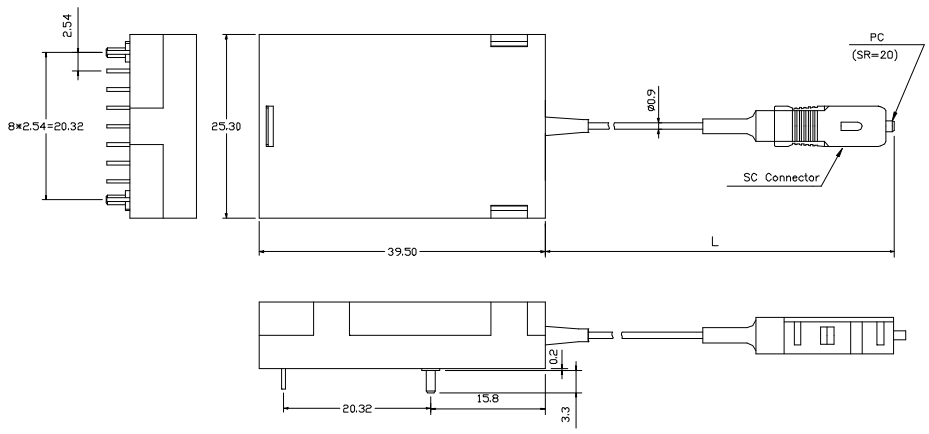

BTR-7710-SP50G / BTR-7710A-SP50G

Note: Length L is 50± 3 cm. Other pigtail's length is available upon request.

2) Receptacle Type

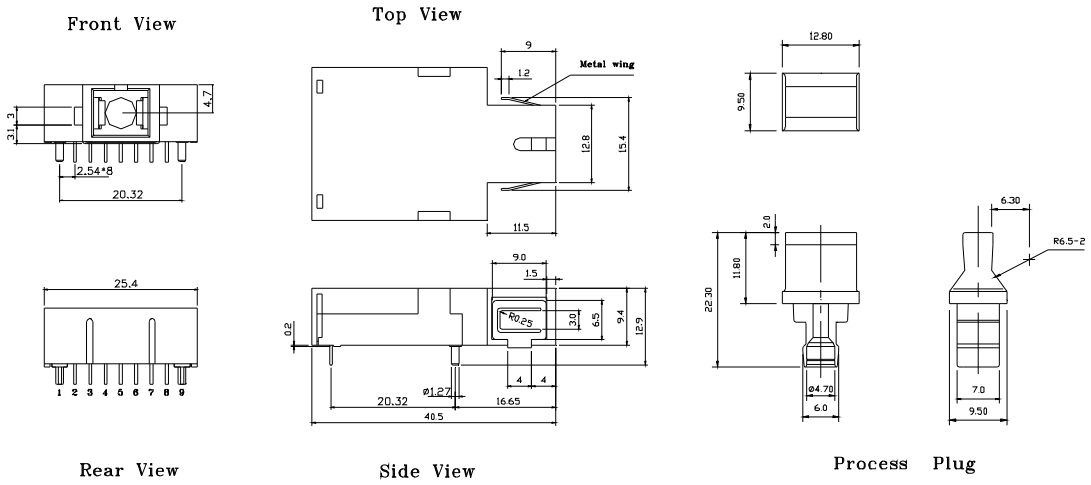

BTR-7710G / BTR-7710AG

Note: Specifications subject to change without notice.