BTM-2A Series BIPHASE MODULATOR

2 to 2500 MHz / Direct TTL Input / Uses Only +5V Supply / Fast Switching / SMA Connectors

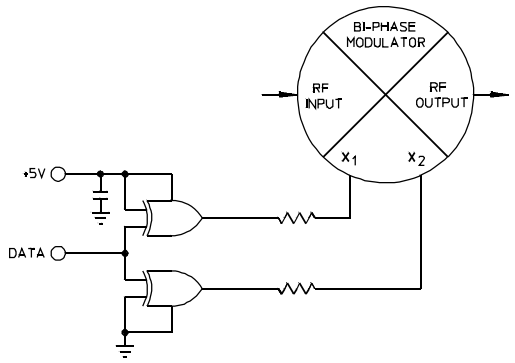

PRINCIPAL SPECIFICATIONS

Model Number	Frequency Range, MHz	Insertion Loss, dB, Max.	Insertion Loss, dB, Typ.	Amplitude Balance, dB, Max.	Amplitude Balance, dB, Typ.	Phase Balance Max.	Phase Balance Typ.	Carrier Suppression, Typ.
BTM-2A-250	2 – 500	3.5	2.5	0.3	0.10	±4°	±2°	– 40 dBc
BTM-2A-500	10 – 500	3	2	0.3	0.20	±3°	±1°	– 40 dBc
	500 – 1000	4	3	0.5	0.20	±4°	±2°	– 35 dBc
BTM-2A-1500	1000 – 2000	6	5	0.75	0.25	±5°	±2°	– 30 dBc
BTM-2A-2250	1500 – 2500	6	5	1.0	0.25	±5°	±2°	– 30 dBc

A-Package Outline

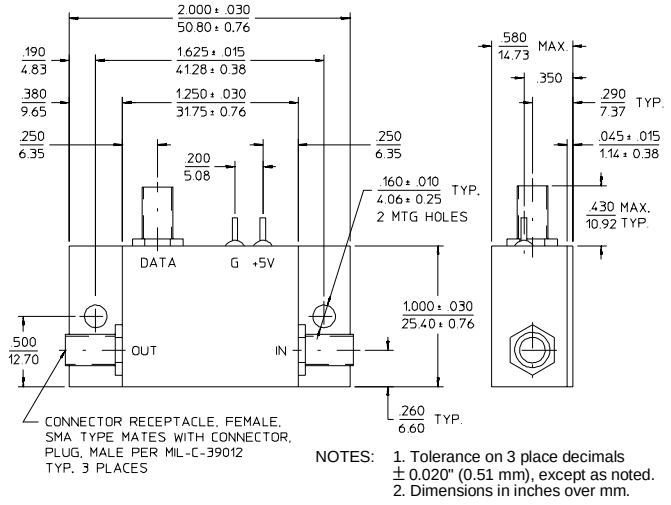

NOTES: 1. Tolerance on 3 place decimals ± 0.020" (0.51 mm), except as noted.
2. Dimensions in inches over mm.

GENERAL SPECIFICATIONS

Impedance:	50 Ω nom.
RF Input Level:	– 3 dBm max.
VSWR:	2.0:1 max.
Switching Speed:	5 nS typ. 50% Control to 90% RF
Data Signal Levels:	TTL compatible
Power Supply:	+5 VDC @ 25 mA
Weight, nominal:	1.5 oz (42 g)
Operating Temp:	– 55° to +85°C

AVAILABLE OPTIONS

Direct Input (No driver): As BPM series
Integral ECL Driver: As BEM series

General Notes:

1. The BTM-2A series of Biphase Modulators covers the frequency range of 2 to 2500 MHz and includes interfacing circuitry so units may be driven directly using a +5V supply.

2. Customized versions are available for special frequency bands matched to your special applications.

3. Most units in this series are available in a variety of alternative packages such as the Meri-Pac™ or flatpack (see BTF-2A series). Units supplied without integral TTL drivers are available in the BPM-2A series.

4. All units comply with the applicable sections of MIL-M-28837 and may be supplied screened for compliance with additional specifications for military and space applications requiring the highest reliability.

22Feb96

For further information contact ***MERRIMAC / 41 Fairfield Pl., West Caldwell, NJ, 07006 / 973-575-1300 / FAX 973-575-0531***