BTA20 BW/CW
BTB20 BW/CW

SNUBBERLESS TRIACS

FEATURES

- High commutation: (dI/dt)c > 18A/ms without snubber
- High surge current: I_{TSM} = 200A
- V_{DRM} up to 800V
- BTA Family:
  Insulating voltage = 2500$V_{(RMS)}$
  (UL recognized: E81734)

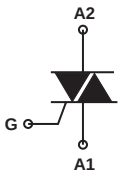

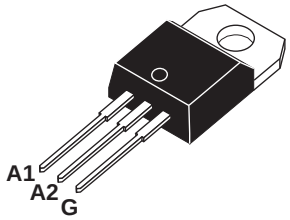

TO-220AB

DESCRIPTION

The BTA/BTB20 BW/CW triac family are high performance glass passivated chips technology.
The SNUBBERLESS™ concept offer suppression of RC network and it is suitable for application such as phase control and static switching on inductive or resistive load.

ABSOLUTE RATINGS (limiting values)

Symbol	Parameter			Value	Unit
$I_{T(RMS)}$	RMS on-state current (360° conduction angle)	BTA	Tc = 70°C	20	A
		BTB	Tc = 90°C		
I_{TSM}	Non repetitive surge peak on-state current (Tj initial = 25°C)		tp = 8.3ms	210	A
			tp = 10ms	200	
I^2t	I^2t value		tp = 10ms	200	A^2s
dI/dt	Critical rate of rise of on-state current Gate supply: I_G = 500mA dI_G/dt = 1A/µs		Repetitive F = 50Hz	20	A/µs
			Non repetitive	100	
Tstg Tj	Storage and operating junction temperature range			-40 to +150 -40 to +125	°C
Tl	Maximum lead soldering temperature during 10s at 4.5mm from case			260	°C

Symbol	Parameter	BTA/BTB20-...BW/CW		Unit
		600	700	
V_{DRM} V_{RRM}	Repetitive peak off-state voltage Tj = 125°C	600	700	V

THERMAL RESISTANCE

Symbol	Parameter		Value	Unit
Rth (j-a)	Junction to ambient		60	°C/W
Rth (j-c) DC	Junction to case for DC	BTA	2.8	°C/W
		BTB	1.7	
Rth (j-c) AC	Junction to case for 360° conduction angle (F = 50Hz)	BTA	2.1	°C/W
		BTB	1.3	

GATE CHARACTERISTICS (maximum values)

$P_{G(AV)}$ = 1W P_{GM} = 10W (tp = 20µs) I_{GM} = 4A (tp = 20µs) V_{GM} = 16V (tp = 20µs)

ELECTRICAL CHARACTERISTICS

Symbol	Test conditions		Quadrant		BTA / BTB20		Unit
					BW	CW	
I_{GT}	V_D = 12V (DC) R_L = 33Ω	Tj = 25°C	I - II - III	MIN.	2	1	mA
				MAX.	50	35	
V_{GT}	V_D = 12V (DC) R_L = 33Ω	Tj = 25°C	I - II - III	MAX.	1.5		V
V_{GD}	$V_D = V_{DRM}$ R_L = 3.3kΩ	Tj =125°C	I - II - III	MIN.	0.2		V
tgt	$V_D = V_{DRM}$ I_G = 500mA dI_G/dt = 3A/µs	Tj = 25°C	I - II - III	TYP.	2		µs
I_L	$I_G = 1.2I_{GT}$	Tj = 25°C	I - III	TYP.	50	-	mA
			II		90	-	
			I - II - III	MAX.	-	80	
I_H*	I_T = 500mA Gate open	Tj = 25°C		MAX.	75	50	mA
V_{TM} *	I_{TM} = 28A tp = 380µs	Tj = 25°C		MAX.	1.70		V
I_{DRM} I_{RRM}	V_{DRM} rated V_{RRM} rated	Tj = 25°C		MAX.	0.01		mA
		Tj = 125°C		MAX.	3		
dV/dt *	Linear slope up to V_D = 67% V_{DRM} gate open	Tj = 125°C		TYP.	750	500	V/µs
				MIN.	500	250	
(dI/dt)c*	Without snubber	Tj = 125°C		TYP.	36	22	A/ms
				MIN.	18	11	

* For either polarity of electrode A_2 voltage with reference to electrode A_1

PRODUCT INFORMATION

Package	$I_{T(RMS)}$	V_{DRM} / V_{RRM}	Sensitivity Specification	
	A	V	BW	CW
BTA (Insulated)	20	600	X	X
		700	X	X
BTB (Uninsulated)		600		X

ORDERING INFORMATION

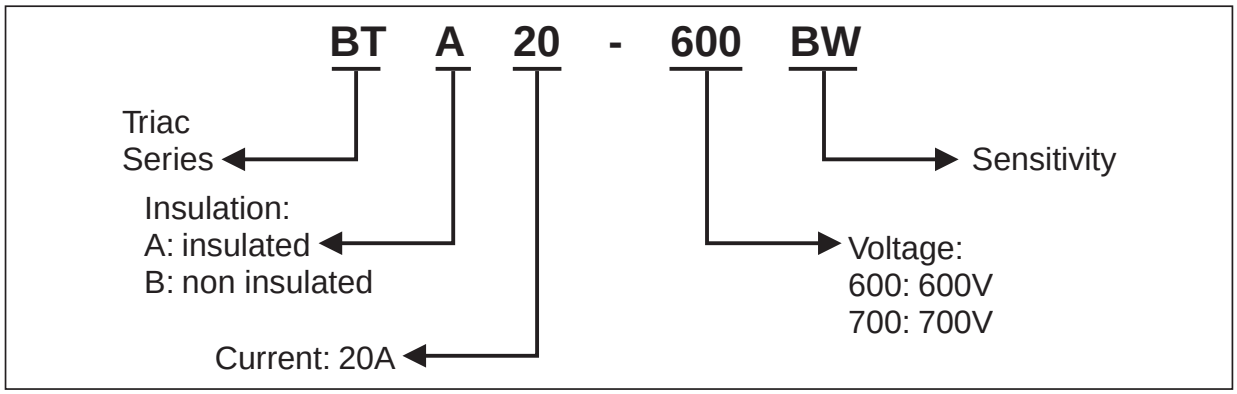

Fig. 1: Maximum RMS power dissipation versus RMS on-state current (F = 50Hz).(Curves are cut off by (dI/dt)c limitation)

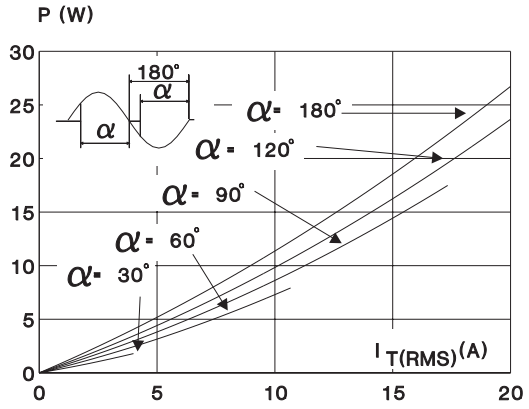

Fig. 2: Correlation between maximum RMS power dissipation and maximum allowable temperatures (Tamb and Tcase) for different thermal resistances heatsink + contact (BTA).

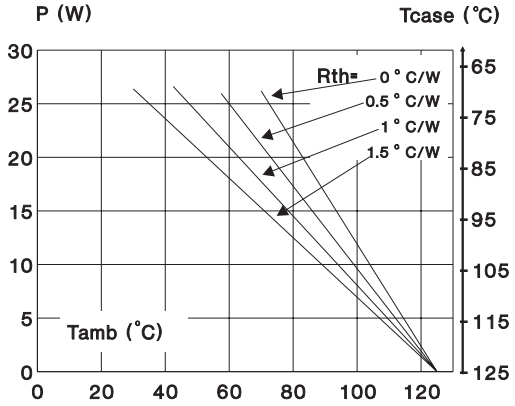

Fig. 3: Correlation between maximum RMS power dissipation and maximum allowable temperatures (Tamb and Tcase) for different thermal resistances heatsink + contact (BTB).

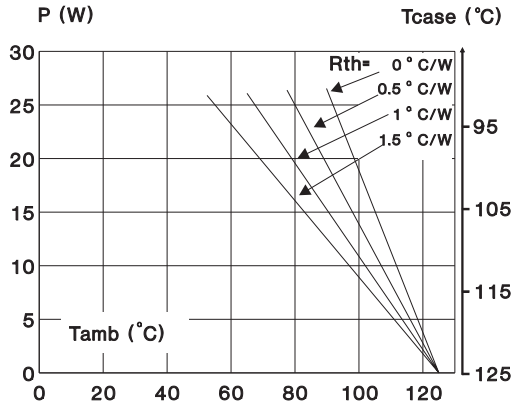

Fig. 4: RMS on-state current versus case temperature.

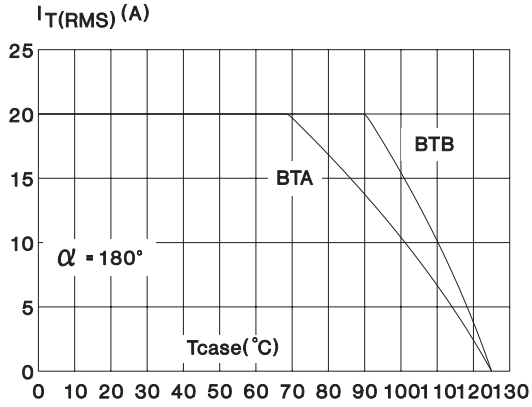

Fig. 5: Relative variation of thermal impedance versus pulse duration.

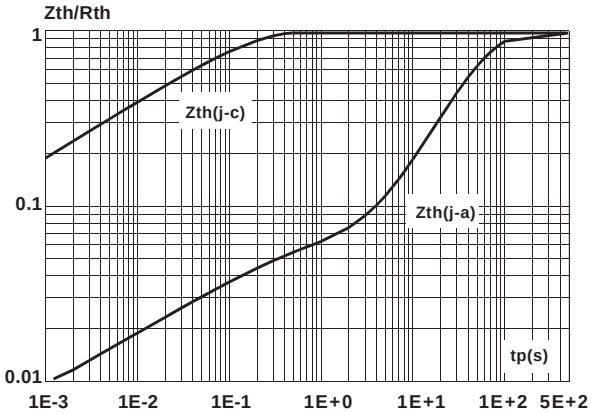

Fig. 6: Relative variation of gate trigger current and holding current versus junction temperature.

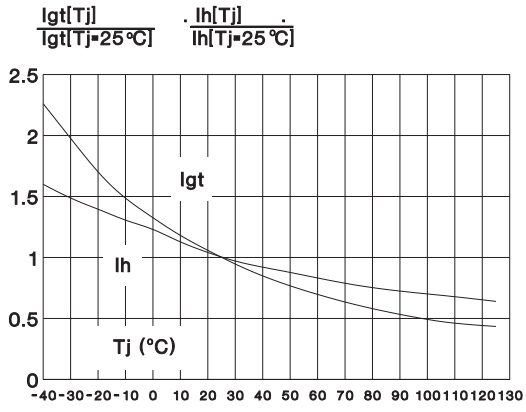

Fig. 7: Non repetitive surge peak on-state current versus number of cycles.

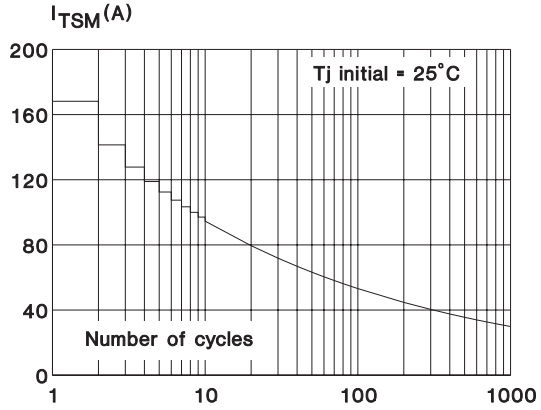

Fig. 8: Non repetitive surge peak on-state current for a sinusoidal pulse with width: $t \leq 10ms$, and corresponding value of I^2t.

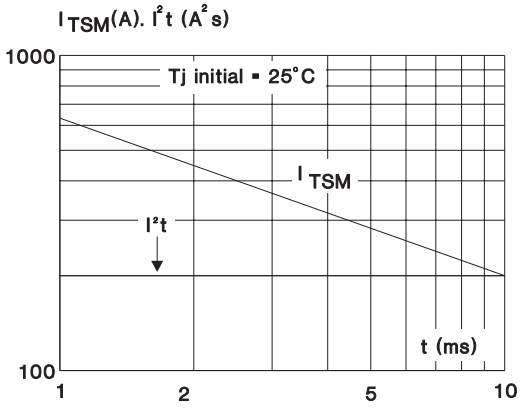

Fig. 9: On-state characteristics (maximum values).

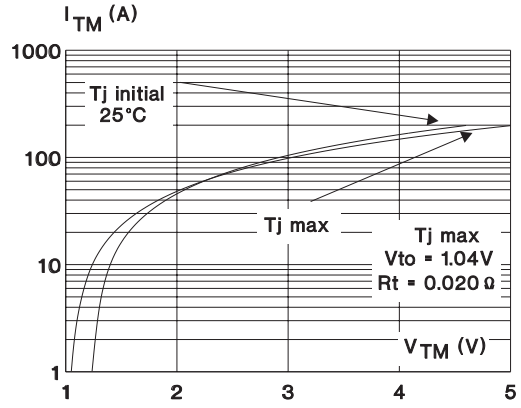

PACKAGE MECHANICAL DATA

TO-220AB (Plastic)

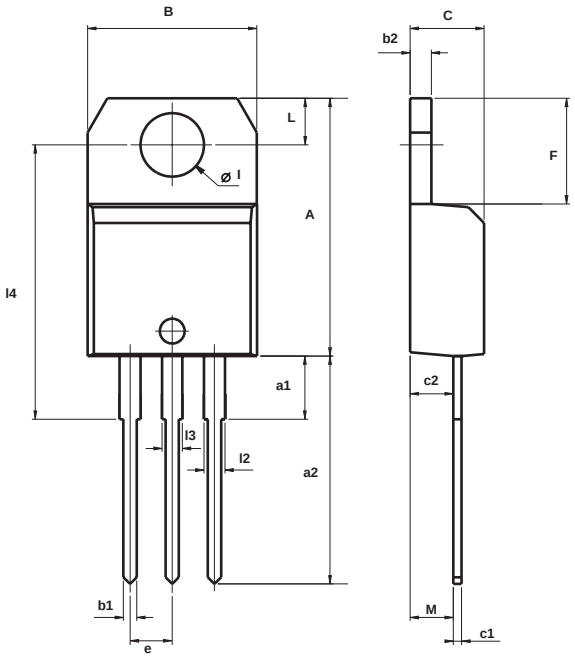

REF.	DIMENSIONS					
	Millimeters			Inches		
	Min.	Typ.	Max.	Min.	Typ.	Max.
A	15.20		15.90	0.598		0.625
a1		3.75			0.147	
a2	13.00		14.00	0.511		0.551
B	10.00		10.40	0.393		0.409
b1	0.61		0.88	0.024		0.034
b2	1.23		1.32	0.048		0.051
C	4.40		4.60	0.173		0.181
c1	0.49		0.70	0.019		0.027
c2	2.40		2.72	0.094		0.107
e	2.40		2.70	0.094		0.106
F	6.20		6.60	0.244		0.259
I	3.75		3.85	0.147		0.151
l4	15.80	16.40	16.80	0.622	0.646	0.661
L	2.65		2.95	0.104		0.116
l2	1.14		1.70	0.044		0.066
l3	1.14		1.70	0.044		0.066
M		2.60			0.102	

OTHER INFORMATION

Ordering type	Marking	Package	Weight	Base qty	Delivery mode
BTA/BTB20-xxxyz	BTA/BTB20-xxxyz	TO-220AB	2.3 g	250	Bulk

- Epoxy meets UL94,V0
- Cooling method: C
- Recommended torque value: 0.8 m.N.
- Maximum torque value: 1 m.N.

Information furnished is believed to be accurate and reliable. However, STMicroelectronics assumes no responsibility for the consequences of use of such information nor for any infringement of patents or other rights of third parties which may result from its use. No license is granted by implication or otherwise under any patent or patent rights of STMicroelectronics. Specifications mentioned in this publication are subject to change without notice. This publication supersedes and replaces all information previously supplied.
STMicroelectronics products are not authorized for use as critical components in life support devices or systems without express written approval of STMicroelectronics.

The ST logo is a registered trademark of STMicroelectronics

© 2001 STMicroelectronics - Printed in Italy - All rights reserved.

STMicroelectronics GROUP OF COMPANIES
Australia - Brazil - China - Finland - France - Germany - Hong Kong - India - Italy - Japan - Malaysia
Malta - Morocco - Singapore - Spain - Sweden - Switzerland - United Kingdom - U.S.A.

http://www.st.com