DATA SHEET

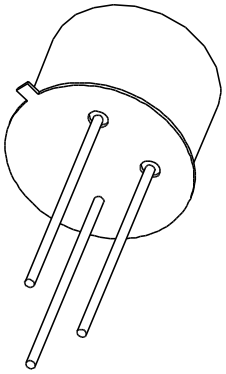

BSX45; BSX46; BSX47
NPN medium power transistors

Product specification
Supersedes data of September 1994
File under Discrete Semiconductors, SC04

1997 Apr 23

Philips
Semiconductors

PHILIPS

NPN medium power transistors BSX45; BSX46; BSX47

FEATURES

- High current (max. 1 A)
- Low voltage (max. 80 V).

APPLICATIONS

- General industrial applications.

DESCRIPTION

NPN medium power transistor in a TO-39 metal package.

PINNING

PIN	DESCRIPTION
1	emitter
2	base
3	collector, connected to case

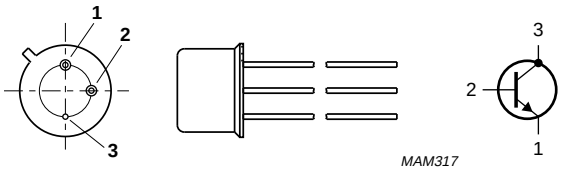

Fig.1 Simplified outline (TO-39) and symbol.

QUICK REFERENCE DATA

SYMBOL	PARAMETER	CONDITIONS	MIN.	TYP.	MAX.	UNIT
V_{CBO}	collector-base voltage	open emitter				
	BSX45		–	–	80	V
	BSX46		–	–	100	V
	BSX47		–	–	120	V
V_{CEO}	collector-emitter voltage	open base				
	BSX45		–	–	40	V
	BSX46		–	–	60	V
	BSX47		–	–	80	V
I_{CM}	peak collector current		–	–	1.5	A
P_{tot}	total power dissipation	$T_{case} \leq 25$ °C	–	–	6.25	W
h_{FE}	DC current gain	I_C = 100 mA; V_{CE} = 1 V				
	BSX45-10; BSX46-10; BSX47-10		63	100	160	
	BSX45-16; BSX46-16; BSX47-16		100	160	250	
f_T	transition frequency	I_C = 50 mA; V_{CE} = 10 V; f = 100 MHz	50	–	–	MHz

LIMITING VALUES

In accordance with the Absolute Maximum Rating System (IEC 134).

SYMBOL	PARAMETER	CONDITIONS	MIN.	MAX.	UNIT
V_{CBO}	collector-base voltage	open emitter			
	BSX45		–	80	V
	BSX46		–	100	V
	BSX47		–	120	V
V_{CEO}	collector-emitter voltage	open base			
	BSX45		–	40	V
	BSX46		–	60	V
	BSX47		–	80	V
V_{EBO}	emitter-base voltage	open collector	–	7	V
I_C	collector current (DC)		–	1	A
I_{CM}	peak collector current		–	1.5	A
I_{BM}	peak base current		–	200	mA
P_{tot}	total power dissipation	$T_{case} \leq 25$ °C	–	6.25	W
T_{stg}	storage temperature		–65	+150	°C
T_j	junction temperature		–	200	°C
T_{amb}	operating ambient temperature		–65	+150	°C

THERMAL CHARACTERISTICS

SYMBOL	PARAMETER	CONDITIONS	VALUE	UNIT
$R_{th\ j\text{-}a}$	thermal resistance from junction to ambient	in free air	200	K/W
$R_{th\ j\text{-}c}$	thermal resistance from junction to case		28	K/W

CHARACTERISTICS

T_{amb} = 25 °C unless otherwise specified.

SYMBOL	PARAMETER	CONDITIONS	MIN.	TYP.	MAX.	UNIT
I_{CBO}	collector cut-off current					
	BSX45; BSX46	I_E = 0; V_{CB} = 60 V	–	–	30	nA
		I_E = 0; V_{CB} = 60 V; T_{amb} = 150 °C	–	–	10	µA
I_{CBO}	collector cut-off current					
	BSX47	I_E = 0; V_{CB} = 80 V	–	–	30	nA
		I_E = 0; V_{CB} = 80 V; T_{amb} = 150 °	–	–	10	µA
I_{EBO}	emitter cut-off current	I_C = 0; V_{EB} = 5 V	–	–	10	nA
h_{FE}	DC current gain	I_C = 100 µA; V_{CE} = 1 V				
	BSX45-10; BSX46-10; BSX47-10		15	40	–	
	BSX45-16; BSX46-16		25	90	–	
h_{FE}	DC current gain	I_C = 100 mA; V_{CE} = 1 V				
	BSX45-10; BSX46-10; BSX47-10		63	100	160	
	BSX45-16; BSX46-16; BSX47-16		100	160	250	
h_{FE}	DC current gain	I_C = 500 mA; V_{CE} = 1 V				
	BSX45-10; BSX46-10; BSX47-10		25	40	–	
	BSX45-16; BSX46-16		35	60	–	
h_{FE}	DC current gain	I_C = 1 A; V_{CE} = 1 V				
	BSX45-10; BSX46-10; BSX47-10		–	20	–	
	BSX45-16; BSX46-16		–	30	–	
V_{CEsat}	collector-emitter saturation voltage	I_C = 1 A; I_B = 100 mA				
	BSX45; BSX46		–	–	1	V
V_{CEsat}	collector-emitter saturation voltage	I_C = 500 mA; I_B = 25 mA				
	BSX47		–	–	900	mV
V_{BE}	base-emitter voltage	I_C = 100 mA; V_{CE} = 1 V	–	–	1	V
		I_C = 500 mA; V_{CE} = 1 V	0.75	–	1.5	V
		I_C = 1 A; V_{CE} = 1 V	–	–	2	V
C_c	collector capacitance	I_E = i_e = 0; V_{CB} = 10 V; f = 1 MHz				
	BSX45		–	–	25	pF
	BSX46		–	–	20	pF
	BSX47		–	–	15	pF
C_e	emitter capacitance	I_C = i_c = 0; V_{EB} = 0.5 V; f = 1 MHz	–	–	80	pF
f_T	transition frequency	I_C = 50 mA; V_{CE} = 10 V; f = 100 MHz	50	–	–	MHz
F	noise figure	I_C = 100 µA; V_{CE} = 5 V; R_S = 1 kΩ; f = 1 kHz; B = 200 Hz	–	3.5	–	dB
Switching times (between 10% and 90% levels)						
t_{on}	turn-on time	I_{Con} = 100 mA; I_{Bon} = 5 mA; I_{Boff} = –5 mA	–	–	200	ns
t_{off}	turn-off time		–	–	850	ns

PACKAGE OUTLINE

Metal-can cylindrical single-ended package; 3 leads **SOT5/11**

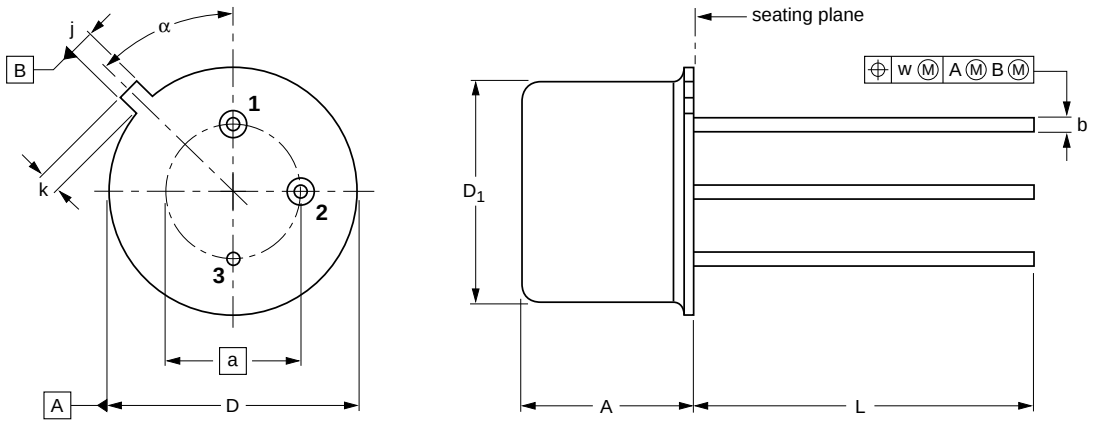

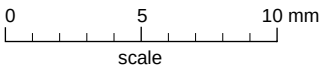

DIMENSIONS (mm are the original dimensions)

UNIT	A	a	b	D	D_1	j	k	L	w	α
mm	6.60 6.35	5.08	0.48 0.41	9.39 9.08	8.33 8.18	0.85 0.75	0.95 0.75	14.2 12.7	0.2	45°

OUTLINE VERSION	REFERENCES				EUROPEAN PROJECTION	ISSUE DATE
	IEC	JEDEC	EIAJ			
SOT5/11		TO-39				97-04-11

DEFINITIONS

Data Sheet Status	
Objective specification	This data sheet contains target or goal specifications for product development.
Preliminary specification	This data sheet contains preliminary data; supplementary data may be published later.
Product specification	This data sheet contains final product specifications.
Limiting values	
Limiting values given are in accordance with the Absolute Maximum Rating System (IEC 134). Stress above one or more of the limiting values may cause permanent damage to the device. These are stress ratings only and operation of the device at these or at any other conditions above those given in the Characteristics sections of the specification is not implied. Exposure to limiting values for extended periods may affect device reliability.	
Application information	
Where application information is given, it is advisory and does not form part of the specification.	

LIFE SUPPORT APPLICATIONS

These products are not designed for use in life support appliances, devices, or systems where malfunction of these products can reasonably be expected to result in personal injury. Philips customers using or selling these products for use in such applications do so at their own risk and agree to fully indemnify Philips for any damages resulting from such improper use or sale.

NOTES

Philips Semiconductors – a worldwide company

Argentina: see South America

Australia: 34 Waterloo Road, NORTH RYDE, NSW 2113,
Tel. +61 2 9805 4455, Fax. +61 2 9805 4466

Austria: Computerstr. 6, A-1101 WIEN, P.O. Box 213,
Tel. +43 1 60 101, Fax. +43 1 60 101 1210

Belarus: Hotel Minsk Business Center, Bld. 3, r. 1211, Volodarski Str. 6,
220050 MINSK, Tel. +375 172 200 733, Fax. +375 172 200 773

Belgium: see The Netherlands

Brazil: see South America

Bulgaria: Philips Bulgaria Ltd., Energoproject, 15th floor,
51 James Bourchier Blvd., 1407 SOFIA,
Tel. +359 2 689 211, Fax. +359 2 689 102

Canada: PHILIPS SEMICONDUCTORS/COMPONENTS,
Tel. +1 800 234 7381

China/Hong Kong: 501 Hong Kong Industrial Technology Centre,
72 Tat Chee Avenue, Kowloon Tong, HONG KONG,
Tel. +852 2319 7888, Fax. +852 2319 7700

Colombia: see South America

Czech Republic: see Austria

Denmark: Prags Boulevard 80, PB 1919, DK-2300 COPENHAGEN S,
Tel. +45 32 88 2636, Fax. +45 31 57 0044

Finland: Sinikalliontie 3, FIN-02630 ESPOO,
Tel. +358 9 615800, Fax. +358 9 61580920

France: 4 Rue du Port-aux-Vins, BP317, 92156 SURESNES Cedex,
Tel. +33 1 40 99 6161, Fax. +33 1 40 99 6427

Germany: Hammerbrookstraße 69, D-20097 HAMBURG,
Tel. +49 40 23 53 60, Fax. +49 40 23 536 300

Greece: No. 15, 25th March Street, GR 17778 TAVROS/ATHENS,
Tel. +30 1 4894 339/239, Fax. +30 1 4814 240

Hungary: see Austria

India: Philips INDIA Ltd, Shivsagar Estate, A Block, Dr. Annie Besant Rd.
Worli, MUMBAI 400 018, Tel. +91 22 4938 541, Fax. +91 22 4938 722

Indonesia: see Singapore

Ireland: Newstead, Clonskeagh, DUBLIN 14,
Tel. +353 1 7640 000, Fax. +353 1 7640 200

Israel: RAPAC Electronics, 7 Kehilat Saloniki St, PO Box 18053,
TEL AVIV 61180, Tel. +972 3 645 0444, Fax. +972 3 649 1007

Italy: PHILIPS SEMICONDUCTORS, Piazza IV Novembre 3,
20124 MILANO, Tel. +39 2 6752 2531, Fax. +39 2 6752 2557

Japan: Philips Bldg 13-37, Kohnan 2-chome, Minato-ku, TOKYO 108,
Tel. +81 3 3740 5130, Fax. +81 3 3740 5077

Korea: Philips House, 260-199 Itaewon-dong, Yongsan-ku, SEOUL,
Tel. +82 2 709 1412, Fax. +82 2 709 1415

Malaysia: No. 76 Jalan Universiti, 46200 PETALING JAYA, SELANGOR,
Tel. +60 3 750 5214, Fax. +60 3 757 4880

Mexico: 5900 Gateway East, Suite 200, EL PASO, TEXAS 79905,
Tel. +9-5 800 234 7381

Middle East: see Italy

Netherlands: Postbus 90050, 5600 PB EINDHOVEN, Bldg. VB,
Tel. +31 40 27 82785, Fax. +31 40 27 88399

New Zealand: 2 Wagener Place, C.P.O. Box 1041, AUCKLAND,
Tel. +64 9 849 4160, Fax. +64 9 849 7811

Norway: Box 1, Manglerud 0612, OSLO,
Tel. +47 22 74 8000, Fax. +47 22 74 8341

Philippines: Philips Semiconductors Philippines Inc.,
106 Valero St. Salcedo Village, P.O. Box 2108 MCC, MAKATI,
Metro MANILA, Tel. +63 2 816 6380, Fax. +63 2 817 3474

Poland: Ul. Lukiska 10, PL 04-123 WARSZAWA,
Tel. +48 22 612 2831, Fax. +48 22 612 2327

Portugal: see Spain

Romania: see Italy

Russia: Philips Russia, Ul. Usatcheva 35A, 119048 MOSCOW,
Tel. +7 095 755 6918, Fax. +7 095 755 6919

Singapore: Lorong 1, Toa Payoh, SINGAPORE 1231,
Tel. +65 350 2538, Fax. +65 251 6500

Slovakia: see Austria

Slovenia: see Italy

South Africa: S.A. PHILIPS Pty Ltd., 195-215 Main Road Martindale,
2092 JOHANNESBURG, P.O. Box 7430 Johannesburg 2000,
Tel. +27 11 470 5911, Fax. +27 11 470 5494

South America: Rua do Rocio 220, 5th floor, Suite 51,
04552-903 São Paulo, SÃO PAULO - SP, Brazil,
Tel. +55 11 821 2333, Fax. +55 11 829 1849

Spain: Balmes 22, 08007 BARCELONA,
Tel. +34 3 301 6312, Fax. +34 3 301 4107

Sweden: Kottbygatan 7, Akalla, S-16485 STOCKHOLM,
Tel. +46 8 632 2000, Fax. +46 8 632 2745

Switzerland: Allmendstrasse 140, CH-8027 ZÜRICH,
Tel. +41 1 488 2686, Fax. +41 1 481 7730

Taiwan: Philips Semiconductors, 6F, No. 96, Chien Kuo N. Rd., Sec. 1,
TAIPEI, Taiwan Tel. +886 2 2134 2865, Fax. +886 2 2134 2874

Thailand: PHILIPS ELECTRONICS (THAILAND) Ltd.,
209/2 Sanpavuth-Bangna Road Prakanong, BANGKOK 10260,
Tel. +66 2 745 4090, Fax. +66 2 398 0793

Turkey: Talatpasa Cad. No. 5, 80640 GÜLTEPE/ISTANBUL,
Tel. +90 212 279 2770, Fax. +90 212 282 6707

Ukraine: PHILIPS UKRAINE, 4 Patrice Lumumba str., Building B, Floor 7,
252042 KIEV, Tel. +380 44 264 2776, Fax. +380 44 268 0461

United Kingdom: Philips Semiconductors Ltd., 276 Bath Road, Hayes,
MIDDLESEX UB3 5BX, Tel. +44 181 730 5000, Fax. +44 181 754 8421

United States: 811 East Arques Avenue, SUNNYVALE, CA 94088-3409,
Tel. +1 800 234 7381

Uruguay: see South America

Vietnam: see Singapore

Yugoslavia: PHILIPS, Trg N. Pasica 5/v, 11000 BEOGRAD,
Tel. +381 11 625 344, Fax.+381 11 635 777

For all other countries apply to: Philips Semiconductors, Marketing & Sales Communications,
Building BE-p, P.O. Box 218, 5600 MD EINDHOVEN, The Netherlands, Fax. +31 40 27 24825

Internet: http://www.semiconductors.philips.com

© Philips Electronics N.V. 1997

SCA54

All rights are reserved. Reproduction in whole or in part is prohibited without the prior written consent of the copyright owner.

The information presented in this document does not form part of any quotation or contract, is believed to be accurate and reliable and may be changed without notice. No liability will be accepted by the publisher for any consequence of its use. Publication thereof does not convey nor imply any license under patent- or other industrial or intellectual property rights.

Printed in The Netherlands 117047/00/02/pp8 Date of release: 1997 Apr 23 Document order number: 9397 750 01882

Let's make things better.

Philips Semiconductors

PHILIPS