NPN Darlington Transistor **BST50;BST51;BST52**

FEATURES

Lead-free

- High current(max.0.5A).
- High voltage(max.80v).
- Integrated diode and resistor.
- PNP complements:BST60,BST61 AND BST62.

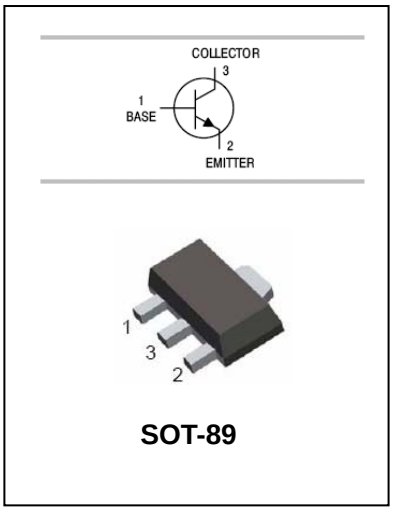

SOT-89

APPLICATIONS

- Industrial switching applications such as:

  -Print hammer

  -Solenoid

  -Relay and lamp driving

ORDERING INFORMATION

Type No.	Marking	Package Code
BST50	AS1	SOT-89
BST51	AS2	SOT-89
BST52	AS3	SOT-89

MAXIMUM RATING @ Ta=25℃ unless otherwise specified

Symbol	**Parameter**		**Value**	**Units**
V_{CBO}	Collector-Base Voltage	BST50 BST51 BST52	60 80 90	V
V_{CEO}	Collector-Emitter Voltage	BST50 BST51 BST52	45 60 80	V
V_{EBO}	Emitter-Base Voltage		5	V
I_C	Collector Current -DC		1	A
I_{CM}	Peak Collector Current		2	A
I_B	Base Current		100	mA
P_{tot}	Total powerDissipation		1.3	W
T_j,T_{stg}	Junction and Storage Temperature		-65 to +150	℃

NPN Darlington Transistor **BST50;BST51;BST52**

ELECTRICAL CHARACTERISTICS @ Ta=25℃ unless otherwise specified

Parameter	Symbol	Test conditions	MIN	TYP	MAX	UNIT
Collector cut-off current	I_{CES}	V_{BE}=0,V_{CE}=45V BST50			50	nA
		V_{BE}=0,V_{CE}=60V BST51			50	nA
		V_{BE}=0,V_{CE}=80V BST52			50	nA
Emitter cut-off current	I_{EBO}	V_{EB}=4V,I_C=0			50	nA
DC current gain	h_{FE}	V_{CE}=10V,I_C=150mA	1000			
		V_{CE}=10V,I_C=500mA	2000			
Collector-emitter saturation voltage	$V_{CE(sat)}$	I_C=500mA, I_B=0.5mA			1.3	V
		I_C=500mA, I_B=0.5mA,T_j=150℃				
Base-emitter saturation voltage	$V_{BE(sat)}$	I_C=500mA, I_B=0.5mA			1.9	V
Transition frequency	f_T	V_{CE}=5V,I_C=500mA, f=100MHz		200		MHz
Turn-on Time	t_{on}	I_{Con}=500mA,I_{Bon}=0.5mA, I_{Boff}=-0.5mA		400		ns
Turn-off Time	t_{off}			1500		ns

TYPICAL CHARACTERISTICS @ Ta=25℃ unless otherwise specified

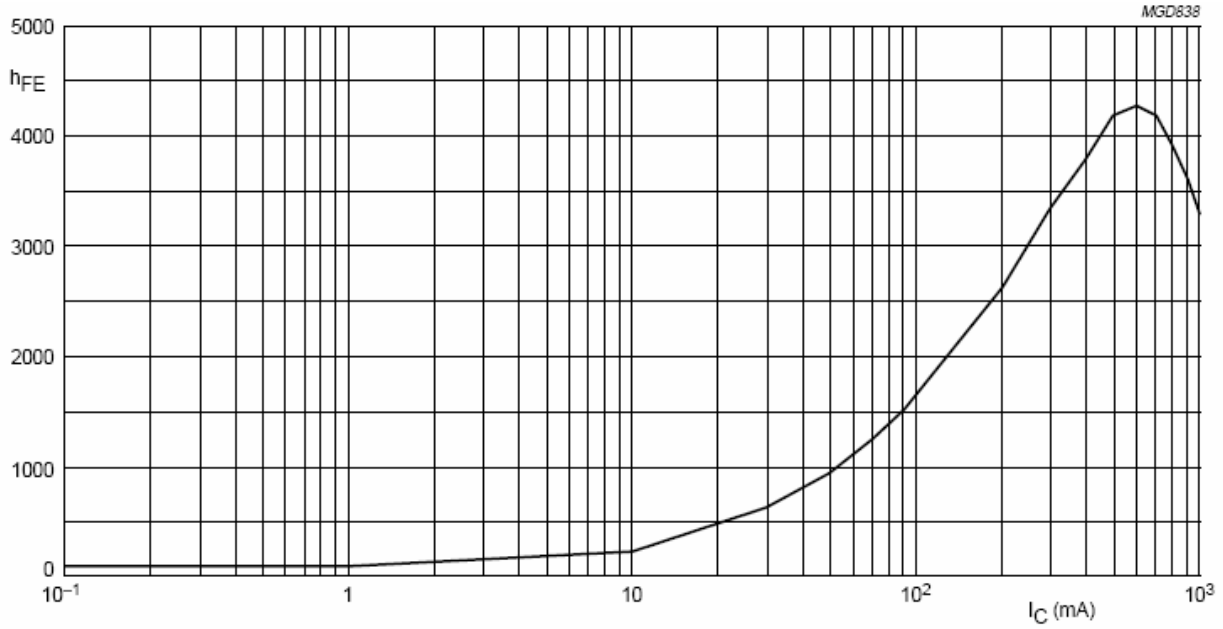

V_{CE} = 10 V.

DC current gain; typical values.

NPN Darlington Transistor **BST50;BST51;BST52**

PACKAGE OUTLINE

Plastic surface mounted package SOT-89

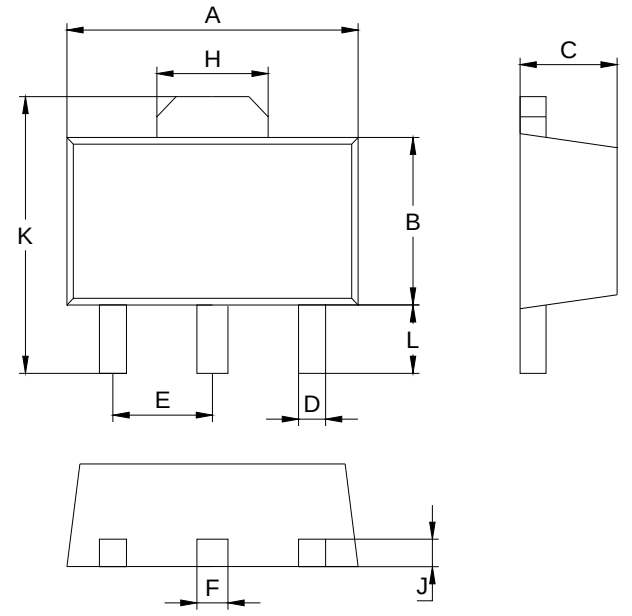

SOT-89		
Dim	Min	Max
A	4.30	4.70
B	2.25	2.65
C	1.50 Typical	
D	0.40 Typical	
E	1.40	1.60
F	0.48 Typical	
H	1.60	1.80
J	0.40 Typical	
L	0.90	1.10
K	3.95	4.35
All Dimensions in mm		

SOLDERING FOOTPRINT

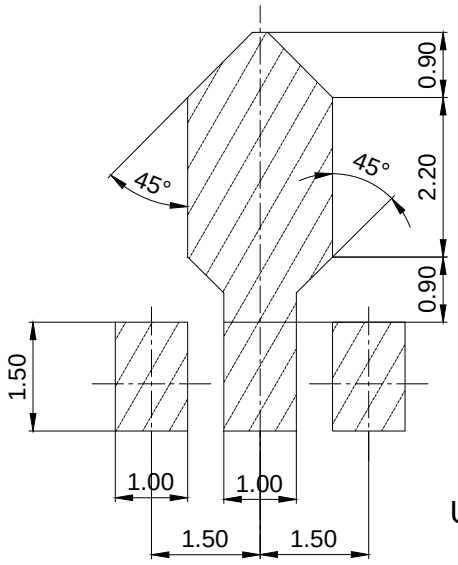

Unit:mm

PACKAGE INFORMATION

Device	Package	Shipping
BST50/BST51/BST52	SOT-89	1000/Tape&Reel