SIPMOS ® Small-Signal Transistor

- N channel
- Depletion mode
- High dynamic resistance

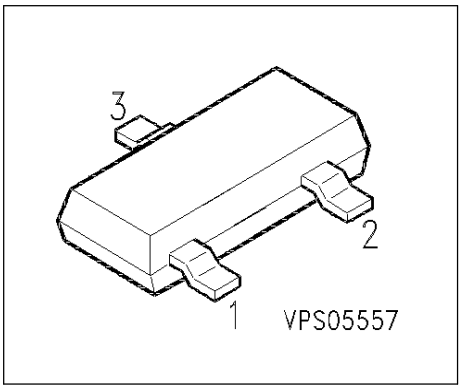

Pin 1	Pin 2	Pin 3
G	S	D

Type	V_{DS}	I_D	$R_{DS(on)}$	Package	Ordering Code
BSS 169	100 V	0.12 A	12 Ω	SOT-23	Q67050-T7

Maximum Ratings

Parameter	**Symbol**	**Values**	**Unit**
Drain source voltage	V_{DS}	100	V
Drain-gate voltage R_{GS} = 20 kΩ	V_{DGR}	100	
Gate source voltage	V_{GS}	± 14	
Gate-source peak voltage, aperiodic	V_{gs}	± 20	
Continuous drain current T_A = 25 °C	I_D	0.12	A
DC drain current, pulsed T_A = 25 °C	I_{Dpuls}	0.36	
Power dissipation T_A = 25 °C	P_{tot}	0.36	W
Chip or operating temperature	T_j	-55 ... + 150	°C
Storage temperature	T_{stg}	-55 ... + 150	
Thermal resistance, chip to ambient air	R_{thJA}	≤ 350	K/W
Therminal resistance, chip-substrate - reverse side [1)]	R_{thJSR}	≤ 285	
DIN humidity category, DIN 40 040		E	
IEC climatic category, DIN IEC 68-1		55 / 150 / 56	

1) For package mounted on aluminium 15 mm x 16.7 mm x 0.7 mm.

Electrical Characteristics, at T_j = 25°C, unless otherwise specified

Parameter	Symbol	Values			Unit
		min.	typ.	max.	
Static Characteristics					
Drain-source breakdown voltage V_{GS} = -10 V, I_D = 250 µA	$V_{(BR)DSV}$	100	-	-	V
Gate threshold voltage V_{DS} = 3 V, I_D = 10 µA	$V_{GS(th)}$	-3	-2.5	-1.5	
Drain-source cutoff current V_{DS} = 100 V, V_{GS} = -10 V, T_j = 25 °C V_{DS} = 100 V, V_{GS} = -10 V, T_j = 125 °C	I_{DSV}	- -	- -	1 -	µA
On-state drain current V_{GS} = 0 V, V_{DS} = 10 V	$I_{D(on)}$	70	200	-	mA
Gate-source leakage current V_{GS} = 20 V, V_{DS} = 0 V	I_{GSS}	-	10	100	nA
Drain-Source on-resistance V_{GS} = 0 V, I_D = 0.05 A	$R_{DS(on)}$	-	6	12	Ω

Electrical Characteristics, at T_j = 25°C, unless otherwise specified

Parameter	Symbol	Values			Unit
		min.	typ.	max.	
Dynamic Characteristics					
Transconductance $V_{DS} \geq 2 * I_D * R_{DS(on)max}$, I_D = 0.12 A	g_{fs}	0.1	0.15	-	S
Input capacitance V_{GS} = -4.5 V, V_{DS} = 25 V, f = 1 MHz	C_{iss}	-	70	100	pF
Output capacitance V_{GS} = -4.5 V, V_{DS} = 25 V, f = 1 MHz	C_{oss}	-	11	20	
Reverse transfer capacitance V_{GS} = -4.5 V, V_{DS} = 25 V, f = 1 MHz	C_{rss}	-	4	7	
Turn-on delay time V_{DD} = 30 V, V_{GS} = -5... + 5 V, I_D = 0.27 A R_{GS} = 50 Ω	$t_{d(on)}$	-	7	11	ns
Rise time V_{DD} = 30 V, V_{GS} = -5... + 5 V, I_D = 0.27 A R_{GS} = 50 Ω	t_r	-	10	15	
Turn-off delay time V_{DD} = 30 V, V_{GS} = -5... + 5 V, I_D = 0.27 A R_{GS} = 50 Ω	$t_{d(off)}$	-	13	17	
Fall time V_{DD} = 30 V, V_{GS} = -5... + 5 V, I_D = 0.27 A R_{GS} = 50 Ω	t_f	-	13	17	

Electrical Characteristics, at T_j = 25°C, unless otherwise specified

Parameter	Symbol	Values			Unit
		min.	typ.	max.	
Reverse Diode					
Inverse diode continuous forward current T_A = 25 °C	I_S	-	-	0.12	A
Inverse diode direct current,pulsed T_A = 25 °C	I_{SM}	-	-	0.36	
Inverse diode forward voltage V_{GS} = 0 V, I_F = 0.3 A	V_{SD}	-	0.8	1.3	V