Inductive sensor
NI12U-M18M-VP4X-H1141

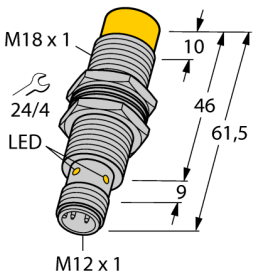

- **Threaded barrel, M18 x 1**
- **Chrome-plated brass**
- **Factor 1 for all metals**
- **Protection class IP68**
- **Resistant to magnetic fields**
- **Extended temperature range**
- **High switching frequency**
- **DC 4-wire, 10…65 VDC**
- **Changeover contact, PNP output**
- **M12 x 1 male connector**

Wiring Diagram

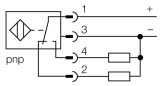

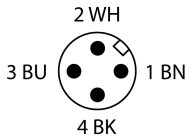

Type designation	NI12U-M18M-VP4X-H1141
Ident-No.	1581458
Rated switching distance Sn	12 mm
Mounting conditions	Non-flush
Secured operating distance	≤ (0,81 x Sn) mm
Repeat accuracy	≤ 2 % of full scale
Temperature drift	≤ ± 10 %
	≤ ± 15 %, ≤ -25 °C v ≥ +70 °C
Hysteresis	3…15 %
Ambient temperature	-30…+85 °C
Operating voltage	10…65 VDC
Residual ripple	≤ 10 % U_{ss}
DC rated operational current	≤ 200 mA
No-load current I_0	≤ 15 mA
Residual current	≤ 0.1 mA
Isolation test voltage	≤ 0.5 kV
Short-circuit protection	yes
Voltage drop at I_e	≤ 1.8 V
Wire breakage/Reverse polarity protection	yes/ Complete
Output function	4-wire, Complementary contact, PNP
Protection class	⧈
Switching frequency	1.5 kHz
Design	Threaded barrel,M18 × 1
Dimensions	61.5 mm
Housing material	Metal, CuZn, Chrome-plated
Active area material	Plastic, PBT
Max. tightening torque housing nut	25 Nm
Electrical connection	Connector, M12 × 1
Vibration resistance	55 Hz (1 mm)
Shock resistance	30 g (11 ms)
Protection class	IP67
MTTF	874 years acc. to SN 29500 (Ed. 99) 40 °C
Packaging unit	1
Switching state	LED, Yellow

Functional principle

Inductive sensors detect metal objects contactless and wear-free. *uprox*® Factor 1 sensors have significant advantages due to their patented ferrite-coreless multicoil system. They detect all metals at the same large switching distance and are resistant to magnetic fields.

Edition • 2019-02-08T05:43:26+01:00

Inductive sensor
NI12U-M18M-VP4X-H1141

Distance D	3 x B
Distance W	3 x Sn
Distance T	65 mm
Distance S	1.5 x B
Distance G	6 x Sn
Distance N	2 x Sn

Diameter active area B	Ø 18 mm

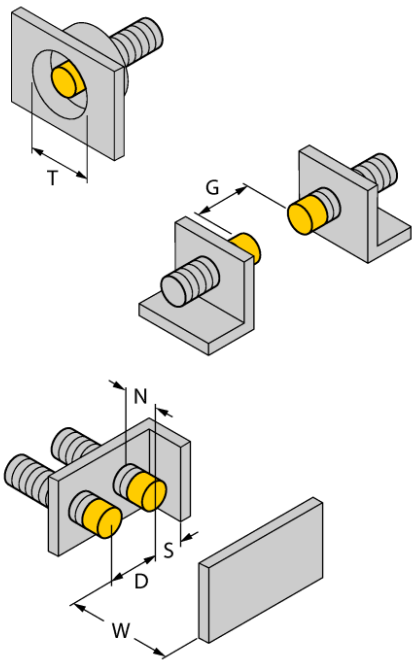

Edition • 2019-02-08T05:43:26+01:00

Inductive sensor
NI12U-M18M-VP4X-H1141

Accessories

Type code	Ident-No.	Description	
MW-18	6945004	Mounting bracket for threaded barrel devices; material: Stainless steel A2 1.4301 (AISI 304)	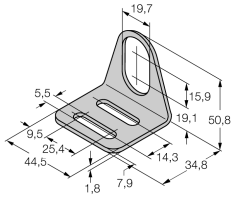
BSS-18	6901320	Mounting bracket for smooth and threaded barrel devices; material: Polypropylene	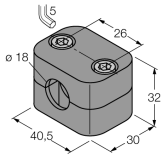

Edition • 2019-02-08T05:43:26+01:00