# BS170G

# Small Signal MOSFET 500 mA, 60 Volts

## N−Channel TO−92 (TO−226)

**ON Semiconductor®**

**http://onsemi.com**

**500 mA, 60 Volts**
**$R_{DS(on)}$ = 5.0 Ω**

**N−Channel**

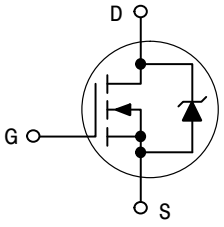


### Features

- This is a Pb−Free Device*

### MAXIMUM RATINGS

| Rating | Symbol | Value | Unit |
|---|---|---|---|
| Drain − Source Voltage | $V_{DS}$ | 60 | Vdc |
| Gate−Source Voltage<br>− Continuous<br>− Non−repetitive ($t_p \le 50$ μs) | <br>$V_{GS}$<br>$V_{GSM}$ | <br>±20<br>±40 | <br>Vdc<br>Vpk |
| Drain Current (Note) | $I_D$ | 0.5 | Adc |
| Total Device Dissipation @ $T_A$ = 25°C | $P_D$ | 350 | mW |
| Operating and Storage Junction Temperature Range | $T_J$, $T_{stg}$ | −55 to +150 | °C |

Stresses exceeding Maximum Ratings may damage the device. Maximum Ratings are stress ratings only. Functional operation above the Recommended Operating Conditions is not implied. Extended exposure to stresses above the Recommended Operating Conditions may affect device reliability.

NOTE: The Power Dissipation of the package may result in a lower continuous drain current.

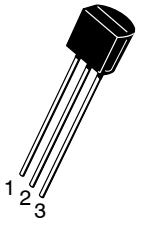


**TO−92 (TO−226)**
**CASE 29**
**STYLE 30**

### MARKING DIAGRAM & PIN ASSIGNMENT

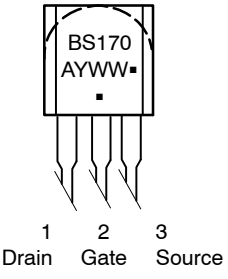


A = Assembly Location
Y = Year
WW = Work Week
▪ = Pb−Free Package

(Note: Microdot may be in either location)

### ORDERING INFORMATION

See detailed ordering and shipping information in the package dimensions section on page 2 of this data sheet.

*For additional information on our Pb−Free strategy and soldering details, please download the ON Semiconductor Soldering and Mounting Techniques Reference Manual, SOLDERRM/D.

© Semiconductor Components Industries, LLC, 2011

**ELECTRICAL CHARACTERISTICS** ($T_A$ = 25°C unless otherwise noted)

| Characteristic | Symbol | Min | Typ | Max | Unit |
|---|---|---|---|---|---|
| **OFF CHARACTERISTICS** | | | | | |
| Gate Reverse Current ($V_{GS}$ = 15 Vdc, $V_{DS}$ = 0) | $I_{GSS}$ | – | 0.01 | 10 | nAdc |
| Drain–Source Breakdown Voltage ($V_{GS}$ = 0, $I_D$ = 100 μAdc) | $V_{(BR)DSS}$ | 60 | 90 | – | Vdc |
| **ON CHARACTERISTICS** (Note 1) | | | | | |
| Gate Threshold Voltage ($V_{DS}$ = $V_{GS}$, $I_D$ = 1.0 mAdc) | $V_{GS(Th)}$ | 0.8 | 2.0 | 3.0 | Vdc |
| Static Drain–Source On Resistance ($V_{GS}$ = 10 Vdc, $I_D$ = 200 mAdc) | $r_{DS(on)}$ | – | 1.8 | 5.0 | Ω |
| Drain Cutoff Current ($V_{DS}$ = 25 Vdc, $V_{GS}$ = 0 Vdc) | $I_{D(off)}$ | – | – | 0.5 | μA |
| Forward Transconductance ($V_{DS}$ = 10 Vdc, $I_D$ = 250 mAdc) | $g_{fs}$ | – | 200 | – | mmhos |
| **SMALL–SIGNAL CHARACTERISTICS** | | | | | |
| Input Capacitance ($V_{DS}$ = 10 Vdc, $V_{GS}$ = 0, f = 1.0 MHz) | $C_{iss}$ | – | – | 60 | pF |
| **SWITCHING CHARACTERISTICS** | | | | | |
| Turn–On Time ($I_D$ = 0.2 Adc) See Figure 1 | $t_{on}$ | – | 4.0 | 10 | ns |
| Turn–Off Time ($I_D$ = 0.2 Adc) See Figure 1 | $t_{off}$ | – | 4.0 | 10 | ns |

1. Pulse Test: Pulse Width ≤ 300 μs, Duty Cycle ≤ 2.0%.

**ORDERING INFORMATION**

| Device | Package | Shipping† |
|---|---|---|
| BS170G | TO–92 (TO–226) (Pb–Free) | 1000 Unit/Tube |
| BS170RLRAG | TO–92 (TO–226) (Pb–Free) | 2000 Tape & Reel |

†For information on tape and reel specifications, including part orientation and tape sizes, please refer to our Tape and Reel Packaging Specifications Brochure, BRD8011/D.

## RESISTIVE SWITCHING

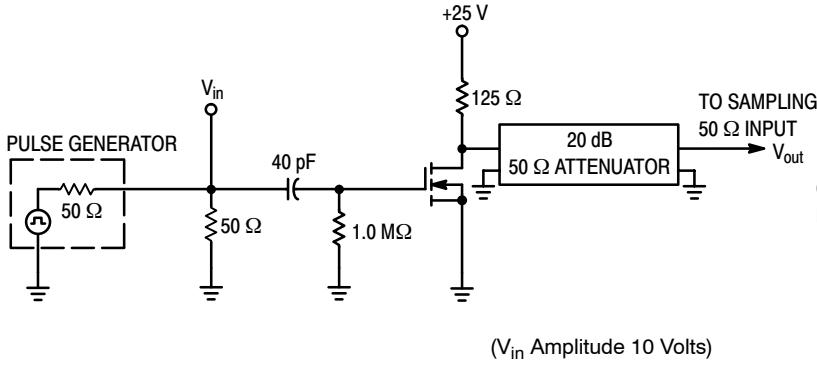


**Figure 1. Switching Test Circuit**

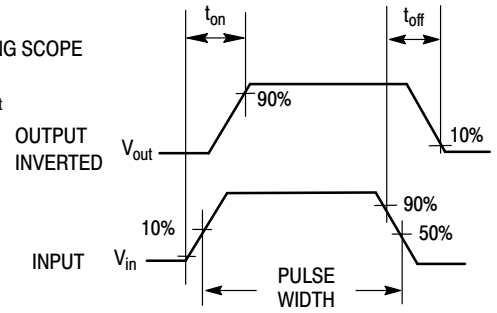


**Figure 2. Switching Waveforms**

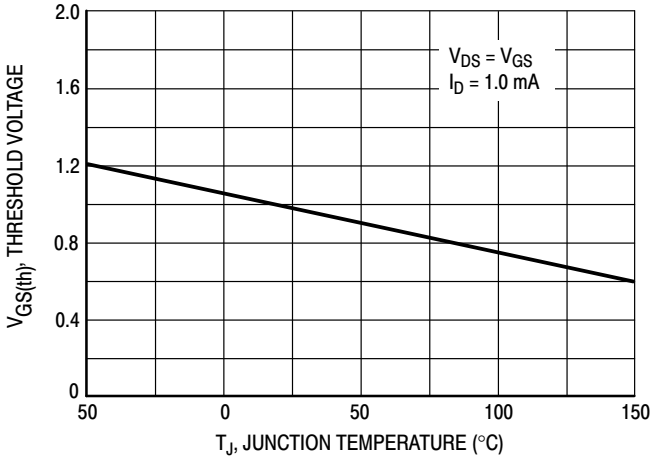


**Figure 3. $V_{GS(th)}$ Normalized versus Temperature**

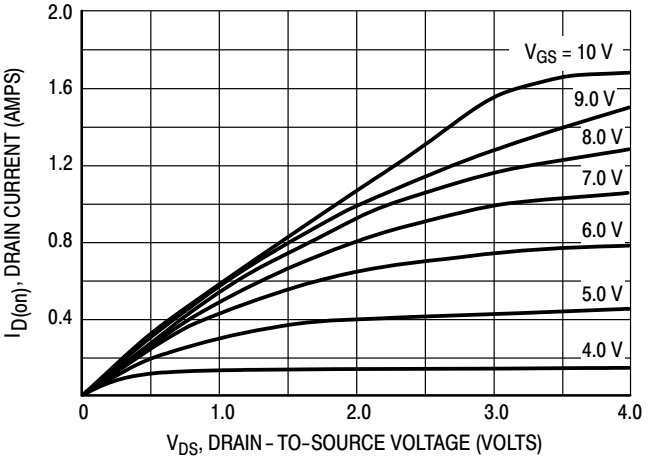


**Figure 4. On−Region Characteristics**

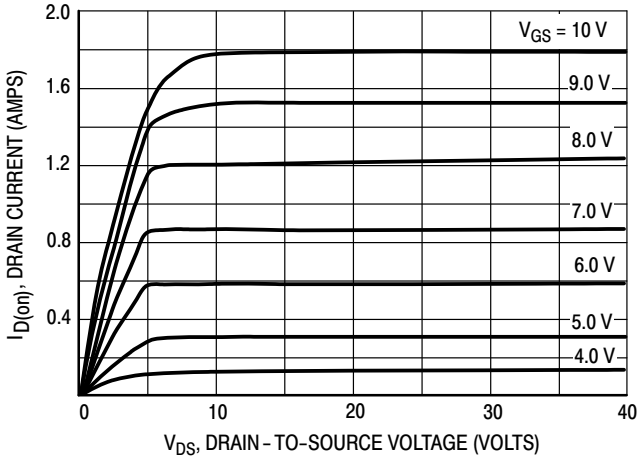


**Figure 5. Output Characteristics**

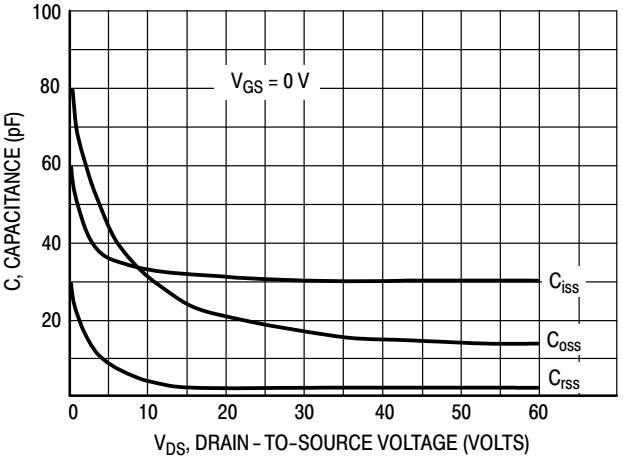


**Figure 6. Capacitance versus Drain−To−Source Voltage**

## PACKAGE DIMENSIONS

**TO−92 (TO−226)**
CASE 29−11
ISSUE AM

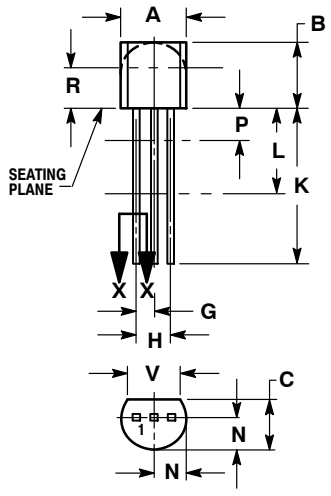


STRAIGHT LEAD
BULK PACK

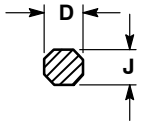


SECTION X−X

NOTES:
1. DIMENSIONING AND TOLERANCING PER ANSI Y14.5M, 1982.
2. CONTROLLING DIMENSION: INCH.
3. CONTOUR OF PACKAGE BEYOND DIMENSION R IS UNCONTROLLED.
4. LEAD DIMENSION IS UNCONTROLLED IN P AND BEYOND DIMENSION K MINIMUM.

| | INCHES | | MILLIMETERS | |
|---|---|---|---|---|
| DIM | MIN | MAX | MIN | MAX |
| A | 0.175 | 0.205 | 4.45 | 5.20 |
| B | 0.170 | 0.210 | 4.32 | 5.33 |
| C | 0.125 | 0.165 | 3.18 | 4.19 |
| D | 0.016 | 0.021 | 0.407 | 0.533 |
| G | 0.045 | 0.055 | 1.15 | 1.39 |
| H | 0.095 | 0.105 | 2.42 | 2.66 |
| J | 0.015 | 0.020 | 0.39 | 0.50 |
| K | 0.500 | --- | 12.70 | --- |
| L | 0.250 | --- | 6.35 | --- |
| N | 0.080 | 0.105 | 2.04 | 2.66 |
| P | --- | 0.100 | --- | 2.54 |
| R | 0.115 | --- | 2.93 | --- |
| V | 0.135 | --- | 3.43 | --- |

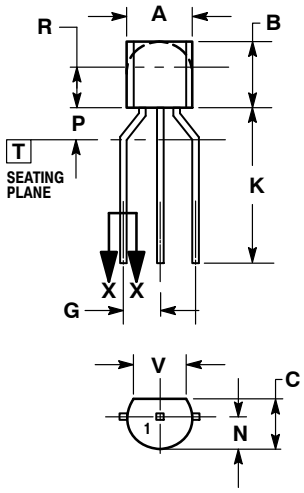


BENT LEAD
TAPE & REEL
AMMO PACK

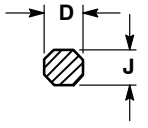


SECTION X−X

NOTES:
1. DIMENSIONING AND TOLERANCING PER ASME Y14.5M, 1994.
2. CONTROLLING DIMENSION: MILLIMETERS.
3. CONTOUR OF PACKAGE BEYOND DIMENSION R IS UNCONTROLLED.
4. LEAD DIMENSION IS UNCONTROLLED IN P AND BEYOND DIMENSION K MINIMUM.

| | MILLIMETERS | |
|---|---|---|
| DIM | MIN | MAX |
| A | 4.45 | 5.20 |
| B | 4.32 | 5.33 |
| C | 3.18 | 4.19 |
| D | 0.40 | 0.54 |
| G | 2.40 | 2.80 |
| J | 0.39 | 0.50 |
| K | 12.70 | --- |
| N | 2.04 | 2.66 |
| P | 1.50 | 4.00 |
| R | 2.93 | --- |
| V | 3.43 | --- |

STYLE 30:
PIN 1. DRAIN
2. GATE
3. SOURCE

**ON Semiconductor** and ON are registered trademarks of Semiconductor Components Industries, LLC (SCILLC). SCILLC reserves the right to make changes without further notice to any products herein. SCILLC makes no warranty, representation or guarantee regarding the suitability of its products for any particular purpose, nor does SCILLC assume any liability arising out of the application or use of any product or circuit, and specifically disclaims any and all liability, including without limitation special, consequential or incidental damages. “Typical” parameters which may be provided in SCILLC data sheets and/or specifications can and do vary in different applications and actual performance may vary over time. All operating parameters, including “Typicals” must be validated for each customer application by customer’s technical experts. SCILLC does not convey any license under its patent rights nor the rights of others. SCILLC products are not designed, intended, or authorized for use as components in systems intended for surgical implant into the body, or other applications intended to support or sustain life, or for any other application in which the failure of the SCILLC product could create a situation where personal injury or death may occur. Should Buyer purchase or use SCILLC products for any such unintended or unauthorized application, Buyer shall indemnify and hold SCILLC and its officers, employees, subsidiaries, affiliates, and distributors harmless against all claims, costs, damages, and expenses, and reasonable attorney fees arising out of, directly or indirectly, any claim of personal injury or death associated with such unintended or unauthorized use, even if such claim alleges that SCILLC was negligent regarding the design or manufacture of the part. SCILLC is an Equal Opportunity/Affirmative Action Employer. This literature is subject to all applicable copyright laws and is not for resale in any manner.

### PUBLICATION ORDERING INFORMATION

**LITERATURE FULFILLMENT**:
Literature Distribution Center for ON Semiconductor
P.O. Box 5163, Denver, Colorado 80217 USA
**Phone**: 303−675−2175 or 800−344−3860 Toll Free USA/Canada
**Fax**: 303−675−2176 or 800−344−3867 Toll Free USA/Canada
**Email**: orderlit@onsemi.com

**N. American Technical Support**: 800−282−9855 Toll Free USA/Canada
**Europe, Middle East and Africa Technical Support:**
Phone: 421 33 790 2910
**Japan Customer Focus Center**
Phone: 81−3−5773−3850

**ON Semiconductor Website**: **www.onsemi.com**

**Order Literature**: http://www.onsemi.com/orderlit

For additional information, please contact your local Sales Representative