BS108

Preferred Device

Small Signal MOSFET 250 mAmps, 200 Volts, Logic Level

N−Channel TO−92

This MOSFET is designed for high voltage, high speed switching applications such as line drivers, relay drivers, CMOS logic, microprocessor or TTL to high voltage interface and high voltage display drivers.

Features

- Low Drive Requirement, V_{GS} = 3.0 V max
- Inherent Current Sharing Capability Permits Easy Paralleling of many Devices
- Pb−Free Packages are Available*

MAXIMUM RATINGS

Rating	Symbol	Value	Unit
Drain−Source Voltage	V_{DSS}	200	Vdc
Gate−Source Voltage	V_{GS}	±20	Vdc
Drain Current Continuous (Note 1) Pulsed (Note 2)	 I_D I_{DM}	 250 500	mAdc
Total Power Dissipation @ T_A = 25°C Derate above T_A = 25°C	P_D	 350 6.4	 mW mW/°C
Operating and Storage Temperature Range	T_J, T_{stg}	−55 to +150	°C

Maximum ratings are those values beyond which device damage can occur. Maximum ratings applied to the device are individual stress limit values (not normal operating conditions) and are not valid simultaneously. If these limits are exceeded, device functional operation is not implied, damage may occur and reliability may be affected.

1. The Power Dissipation of the package may result in a lower continuous drain current.
2. Pulse Test: Pulse Width ≤ 300 μs, Duty Cycle ≤ 2.0%.

*For additional information on our Pb−Free strategy and soldering details, please download the ON Semiconductor Soldering and Mounting Techniques Reference Manual, SOLDERRM/D.

ON Semiconductor®

http://onsemi.com

250 mAMPS
200 VOLTS
$R_{DS(on)}$ = 8 Ω

N−Channel

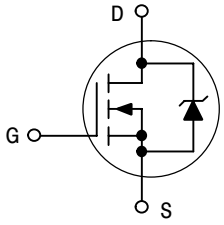

MARKING DIAGRAM

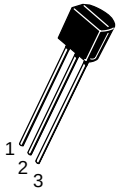

TO−92
CASE 29−11
STYLE 30

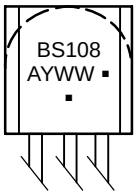

BS108 = Device Code
A = Assembly Location
Y = Year
WW = Work Week
▪ = Pb−Free Package
(Note: Microdot may be in either location)

ORDERING INFORMATION

Device	Package	Shipping
BS108	TO−92	1000 Units/Box
BS108G	TO−92 (Pb−Free)	1000 Units/Box
BS108ZL1	TO−92	2000/Ammo Pack
BS108ZL1G	TO−92 (Pb−Free)	2000/Ammo Pack

Preferred devices are recommended choices for future use and best overall value.

© Semiconductor Components Industries, LLC, 2006

ELECTRICAL CHARACTERISTICS (T_C = 25°C unless otherwise noted)

Characteristic	Symbol	Min	Typ	Max	Unit
OFF CHARACTERISTICS					
Drain−Source Breakdown Voltage (V_{GS} = 0, I_D = 10 μA)	$V_{(BR)DS}$	200	−	−	Vdc
Zero Gate Voltage Drain Current (V_{DSS} = 130 Vdc, V_{GS} = 0)	I_{DSS}	−	−	30	nAdc
Gate−Body Leakage Current (V_{GS} = 15 Vdc, V_{DS} = 0)	I_{GSSF}	−	−	10	nAdc
ON CHARACTERISTICS (Note 3)					
Gate Threshold Voltage (I_D = 1.0 mA, V_{DS} = V_{GS})	$V_{GS(th)}$	0.5	−	1.5	Vdc
Static Drain−to−Source On−Resistance (V_{GS} = 2.0 Vdc, I_D = 50 mA) (V_{GS} = 2.8 Vdc, I_D = 100 mA)	$r_{DS(on)}$	− −	− −	10 8.0	Ω
Drain Cutoff Current (V_{GS} = 0.2 V, V_{DS} = 70 V)	I_{DSX}	−	−	25	μA
Forward Transconductance (I_D = 120 mA, V_{DS} = 20 V)	g_{FS}	−	0.33	−	Mhos
DYNAMIC CHARACTERISTICS					
Input Capacitance (V_{DS} = 25 V, V_{GS} = 0, f = 1.0 MHz)	C_{iss}	−	−	150	pF
Output Capacitance (V_{DS} = 25 V, V_{GS} = 0, f = 1.0 MHz)	C_{oss}	−	−	30	pF
Reverse Transfer Capacitance (V_{DS} = 25 V, V_{GS} = 0, f = 1.0 MHz)	C_{rss}	−	−	10	pF
SWITCHING CHARACTERISTICS					
Turn−On Time (See Figure 1)	$t_{d(on)}$	−	−	15	ns
Turn−Off Time (See Figure 1)	$t_{d(off)}$	−	−	15	ns

3. Pulse Test: Pulse Width ≤ 300 μs, Duty Cycle = 2.0%.

RESISTIVE SWITCHING

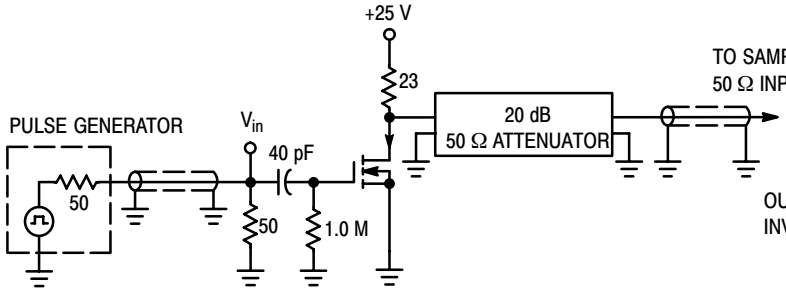

Figure 1. Switching Test Circuit

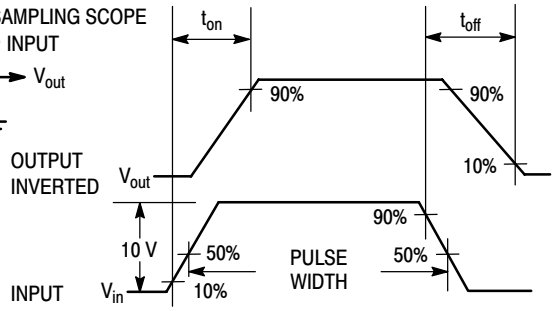

Figure 2. Switching Waveforms

BS108

PACKAGE DIMENSIONS

TO−92 (TO−226)
CASE 29−11
ISSUE AL

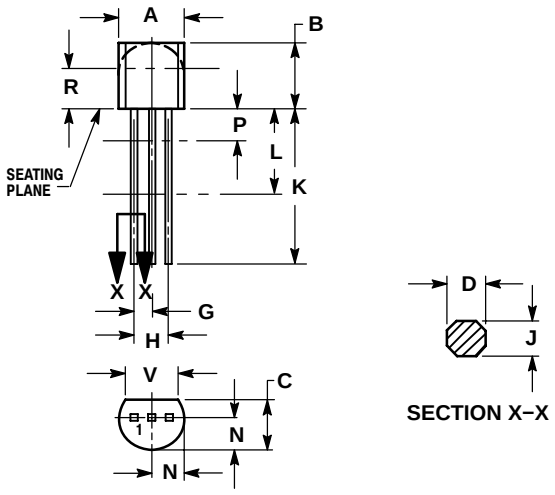

NOTES:
1. DIMENSIONING AND TOLERANCING PER ANSI Y14.5M, 1982.
2. CONTROLLING DIMENSION: INCH.
3. CONTOUR OF PACKAGE BEYOND DIMENSION R IS UNCONTROLLED.
4. LEAD DIMENSION IS UNCONTROLLED IN P AND BEYOND DIMENSION K MINIMUM.

	INCHES		MILLIMETERS	
DIM	MIN	MAX	MIN	MAX
A	0.175	0.205	4.45	5.20
B	0.170	0.210	4.32	5.33
C	0.125	0.165	3.18	4.19
D	0.016	0.021	0.407	0.533
G	0.045	0.055	1.15	1.39
H	0.095	0.105	2.42	2.66
J	0.015	0.020	0.39	0.50
K	0.500	---	12.70	---
L	0.250	---	6.35	---
N	0.080	0.105	2.04	2.66
P	---	0.100	---	2.54
R	0.115	---	2.93	---
V	0.135	---	3.43	---

STYLE 30:
PIN 1. DRAIN
2. GATE
3. SOURCE

ON Semiconductor and ON are registered trademarks of Semiconductor Components Industries, LLC (SCILLC). SCILLC reserves the right to make changes without further notice to any products herein. SCILLC makes no warranty, representation or guarantee regarding the suitability of its products for any particular purpose, nor does SCILLC assume any liability arising out of the application or use of any product or circuit, and specifically disclaims any and all liability, including without limitation special, consequential or incidental damages. “Typical” parameters which may be provided in SCILLC data sheets and/or specifications can and do vary in different applications and actual performance may vary over time. All operating parameters, including “Typicals” must be validated for each customer application by customer’s technical experts. SCILLC does not convey any license under its patent rights nor the rights of others. SCILLC products are not designed, intended, or authorized for use as components in systems intended for surgical implant into the body, or other applications intended to support or sustain life, or for any other application in which the failure of the SCILLC product could create a situation where personal injury or death may occur. Should Buyer purchase or use SCILLC products for any such unintended or unauthorized application, Buyer shall indemnify and hold SCILLC and its officers, employees, subsidiaries, affiliates, and distributors harmless against all claims, costs, damages, and expenses, and reasonable attorney fees arising out of, directly or indirectly, any claim of personal injury or death associated with such unintended or unauthorized use, even if such claim alleges that SCILLC was negligent regarding the design or manufacture of the part. SCILLC is an Equal Opportunity/Affirmative Action Employer. This literature is subject to all applicable copyright laws and is not for resale in any manner.

PUBLICATION ORDERING INFORMATION

LITERATURE FULFILLMENT:
Literature Distribution Center for ON Semiconductor
P.O. Box 61312, Phoenix, Arizona 85082−1312 USA
Phone: 480−829−7710 or 800−344−3860 Toll Free USA/Canada
Fax: 480−829−7709 or 800−344−3867 Toll Free USA/Canada
Email: orderlit@onsemi.com

N. American Technical Support: 800−282−9855 Toll Free USA/Canada

Japan: ON Semiconductor, Japan Customer Focus Center
2−9−1 Kamimeguro, Meguro−ku, Tokyo, Japan 153−0051
Phone: 81−3−5773−3850

ON Semiconductor Website: http://onsemi.com

Order Literature: http://www.onsemi.com/litorder

For additional information, please contact your local Sales Representative.

BS108/D