Features :

1. 0.28 inch (7.00mm) Digit Height.
2. Continuous uniform segments.
3. Low power requirement.
4. Excellent characters appearance.
5. Solid state reliability.
6. Categorized for luminous intensity.
7. Direct drive common anode.

Description :

1. The BS-A282ND is a 7.00mm (0.28") high single digit seven segments display.
2. This product use green chips, which are made from GaP on GaP substrate.
3. This product have a black face and white segments.
4. This product doesn't contain restriction substance, comply ROHS standard.

Package Dimensions :

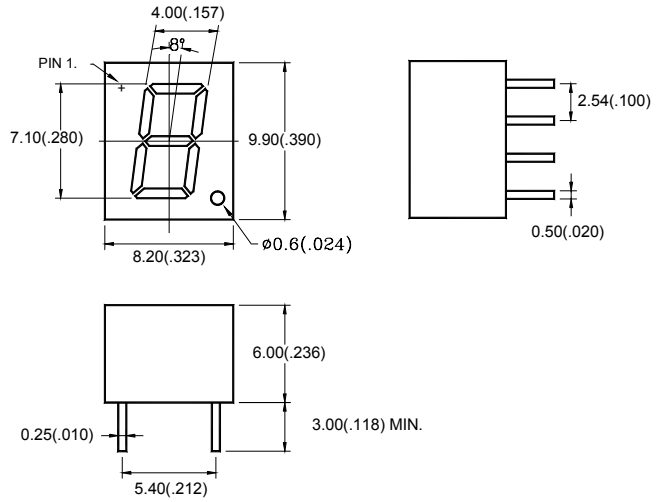

Notes:
1. All dimensions are in millimeters(inches).
2. Tolerance is ±0.25mm(.01")unless otherwise specified.
3. Specifications are subject to change without notice.

Internal Circuit Diagram :



● Absolute Maximum Ratings(Ta=25℃)

Parameter	Symbol	Rating	Unit
Power Dissipation Per Segment	Pd	80	mW
Forward Current Per Segment	I_F	30	mA
Peak Forward Current Per Segment	I_{FP} (Duty 1/10, 1KHZ)	150	mA
Reverse Voltage Per Segment	V_R	5	V
Operating Temperature	Topr	-40℃~80℃	-
Storage Temperature	Tstg	-40℃~85℃	-
Soldering Temperature (1/16" From Body)	Tsol	260℃ For 5 Seconds	-

● Electrical And Optical Characteristics(Ta=25℃)

Parameter	Symbol	Condition	Min.	Typ.	Max.	Unit
Forward Voltage Per Segment	Vf	I_F=10mA	-	2.1	2.5	V
Luminous Intensity Per Segment	Iv	I_F=10mA	-	2.8	-	mcd
Reverse Current Per Segment	I_R	V_R=5V	-	-	100	μA
Peak Wave Length	λp	I_F=10mA	-	568	-	nm
Dominant Wave Length	λd	I_F=10mA	567	-	572	nm
Spectral Line Half-width	Δλ	I_F=10mA	-	30	-	nm

● Typical Electro-Optical Characteristics Curves

(25℃ Ambient Temperature Unless Otherwise Noted)

Fig.1 Relative Radiant Intensity VS. Wavelength

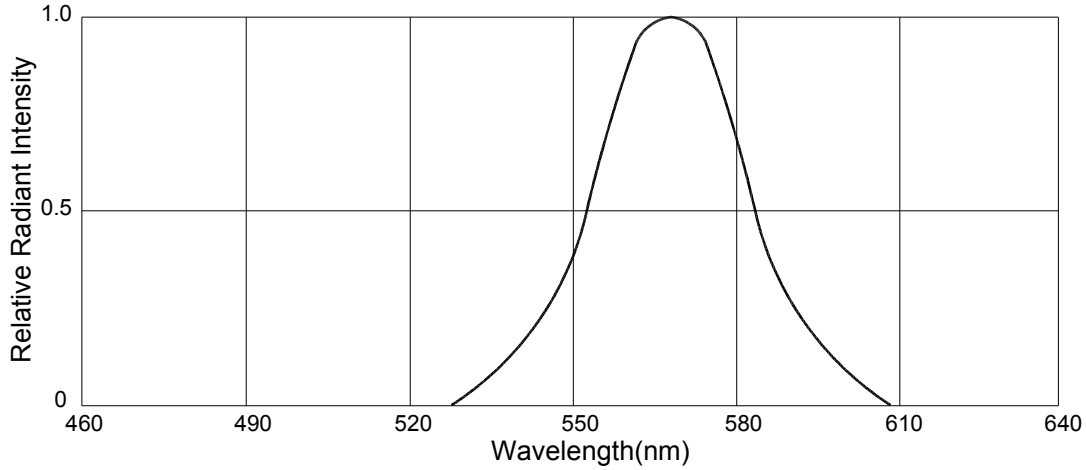

Fig.2 Forward Current VS. Forward Voltage

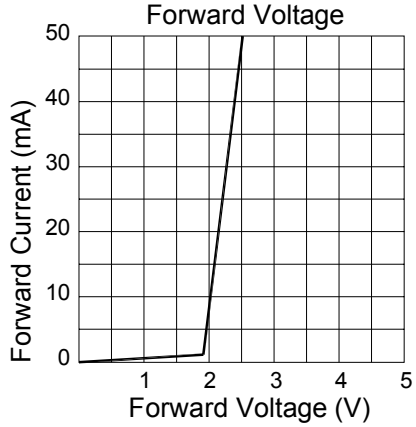

Fig.3 Relative Luminous Intensity VS. Ambient Temperature

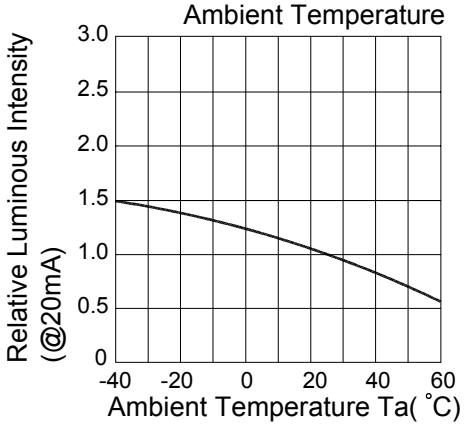

Fig.4 Relative Luminous Intensity VS. Forward Current

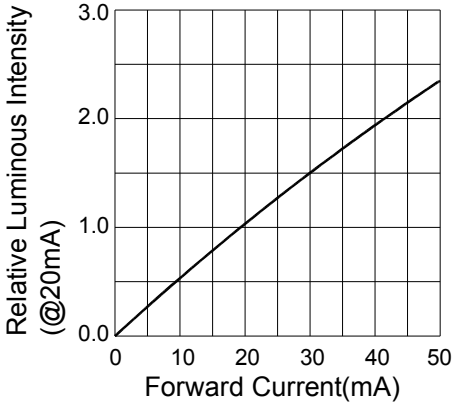

Fig.5 Forward Current Derating Curve VS. Ambient Temperature

