◇ STRUCTURE Silicon Monolithic Integrated Circuit

◇ PRODUCT Microwire BUS 4Kbit (256 × 16bit) EEPROM

◇ PART NUMBER BR93H66-W Series

PART NUMBER	PACKAGE
BR93H66RF-W	SOP8
BR93H66RFJ-W	SOP-J8

◇ FEATURES Microwire BUS EEPROM
Wide action range -40～+125℃
Electrostatic withstand voltage 8kV, about twice of other series (HBM method typ.)

◇ ABSOLUTE MAXIMUM RATING (Ta=25℃)

Parameter	Symbol	Rating	Unit
Supply Voltage	Vcc	-0.3～6.5	V
Power Dissipation	Pd	450 (BR93H66RF-W) *1	mW
		450 (BR93H66RFJ-W) *2	
Storage Temperature	Tstg	-65～150	℃
Operating Temperature	Topr	-40～125	℃
Terminal Voltage	—	-0.3～Vcc+0.3	V

* Dergradation is done at 3.6mW for operation above 25℃

◇ RECOMMENDED OPERATING CONDITION

Parameter	Symbol	Rating	Unit
Supply Voltage	Vcc	2.7～5.5	V
Input Voltage	VIN	0～Vcc	V

Status of this document
The Japanese version of this document is the formal specification.
A customer may use this translation version only for a reference to help reading the formal version.
If there are any differences in translation version of this document, formal version takes priority.

◇ MEMORY CELL CHARACTERISTICS (Vcc=2.7～5.5V)

Parameter		Specification			Unit	Test Condition
		Min.	Typ.	Max.		
Erase/Write Cycle	※1	1,000,000	–	–	Cycles	Ta≦85℃
		500,000	–	–	Cycles	Ta≦105℃
		300,000	–	–	Cycles	Ta≦125℃
Data Retention	※1	40	–	–	Years	Ta≦25℃
		10	–	–	Years	Ta≦50℃

○Initial Data FFFFh in all address. *1 Not 100% TESTED

◇ DC OPERATING CHARACTERISTICS

(Unless otherwise specified Ta=−40～125℃, Vcc=2.7～5.5V)

Parameter	Symbol	Specification			Unit	Test Condition
		Min.	Typ.	Max.		
"L" Input Voltage	VIL	−0.3	–	0.3×Vcc	V	
"H" Input Voltage	VIH	0.7×Vcc	–	Vcc+0.3	V	
"L" Output Voltage1	VOL1	0	–	0.4	V	IOL=2.1mA , 4.0≦Vcc≦5.5
"L" Output Voltage2	VOL2	0	–	0.2	V	IOL=100μA , 2.7≦Vcc≦4.0
"H" Output Voltage1	VOH1	2.4	–	Vcc	V	IOH=−0.4mA , 4.0≦Vcc≦5.5
"H" Output Voltage2	VOH2	Vcc−0.2	–	Vcc	V	IOH=−100μA , 2.7≦Vcc≦4.0
Input Leakage Current	ILI	−10	–	10	μA	VIN=0～Vcc
Output Leakage Current	ILO	−10	–	10	μA	VOUT=0～Vcc , CS=0V
Operating Current	ICC1	–	–	3.0	mA	fSK=1.25MHz , tE/W=10ms (WRITE)
	ICC2	–	–	1.5	mA	fSK=1.25MHz (READ)
	ICC3	–	–	4.5	mA	fSK=1.25MHz , tE/W=10ms (WRAL)
Standby Current	ISB	–	0.1	10	μA	CS=0V , DO=OPEN

○This product is not designed for protection against radioactive rays.

◇ AC OPERATING CHARACTERISTICS

(Unless otherwise specified Ta=−40～125℃, Vcc=2.7～5.5V

Parameter	Symbol	2.7V≦Vcc≦5.5V			Unit
		Min.	Typ.	Max.	
SK Clock Frequency	fSK	–	–	1.25	MHz
SK High Time	tSKH	250	–	–	ns
SK Low Time	tSKL	250	–	–	ns
CS Low Time	tCS	200	–	–	ns
CS Setup Time	tCSS	200	–	–	ns
DI Setup Time	tDIS	100	–	–	ns
CS Hold Time	tCSH	0	–	–	ns
DI Hold Time	tDIH	100	–	–	ns
Data "1" Output Delay Time	tPD1	–	–	300	ns
Data "0" Output Delay Time	tPD0	–	–	300	ns
CS to Status Valid	tSV	–	–	200	ns
CS to Output High-Z	tDF	–	–	200	ns
Write Cycle time	tE/W	–	7	10	ms

◇ BLOCK DIAGRAM

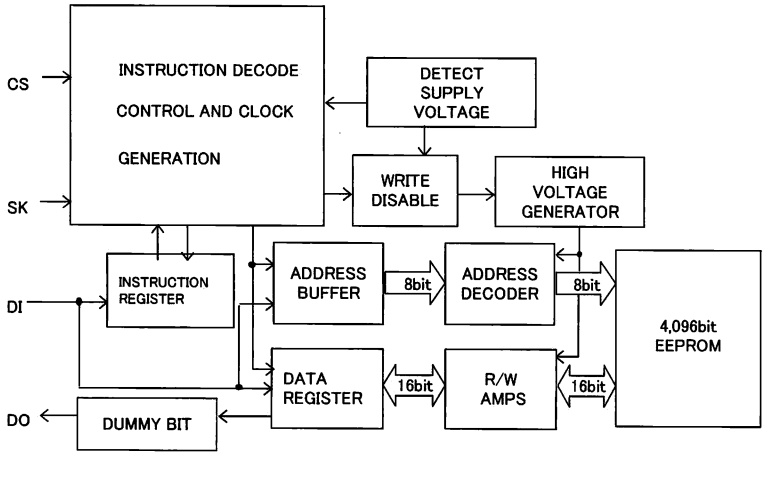

Fig.-1 BLOCK DIAGRAM

◇ PIN No. / PIN NAME

PIN No.	PIN NAME
1	CS
2	SK
3	DI
4	DO
5	GND
6	TEST1
7	TEST2
8	Vcc

◇ NOTES FOR POWER SUPPLY

This IC has a POR (Power On Reset) circuit as mistake write countermeasure.
After POR action, it gets in write disable status. The POR circuit is valid only when power is ON, and does not work when power is OFF. However, if CS is "H" at power ON/OFF, it may become write enable status owing to noises and the likes. For secure operations, observe the following conditions.

1. Set CS = "L".
2. Turn on power so as to satisfy the recommended conditions of tR, tOFF, Vbot for POR circuit operation.

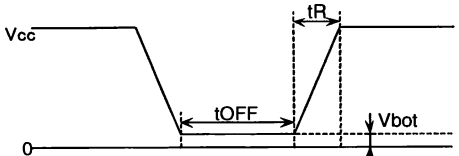

Fig.-2 Vcc RISING WAVEFORM

◇Recommended conditions of tR, tOFF, Vbot

tR	tOFF	Vbot
Below 10ms	Above 10ms	Below 0.3V
Below 100ms	Above 10ms	Below 0.2V

◇ NOTES AT TEST PIN WRONG INPUT

There is no influence of external input upon TEST2 pin.
As for TEST1 pin, input must be GND or OPEN. If "H" level is input, the following may occur.

1. At WEN, WDS, READ command input
   There is no influence by TEST1 pin.
2. WRITE, WRAL command input

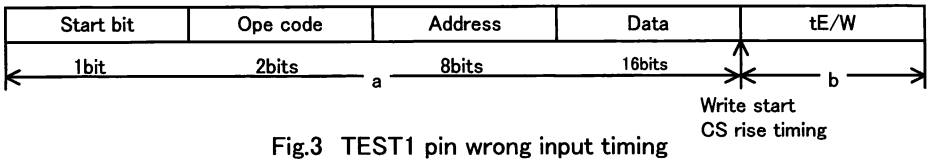

Fig.3 TEST1 pin wrong input timing

a. There is no influence by TEST1 pin.
b. If "H" during write execution, it may not be written correctly. And "H" area remains $\overline{\text{BUSY}}$ and READY does not go back. Avoid noise input, and at use, be sure to connect it to GND terminal or set it OPEN.

◇ CAUTIONS ON USE

(1) Absolute Maximum Ratings

If the absolute maximum ratings such as impressed voltage and action temperature range and so forth are exceeded, LSI may be destructed. Do not impress voltage and temperature exceeding the absolute maximum ratings. In the case of fear exceeding the absolute maximum ratings, take physical safety countermeasures such as fuses, and see to it that conditions exceeding the absolute maximum ratings should not be impressed to LSI.

(2) GND electric potential

Set the voltage of GND terminal lowest at any action condition. Make sure that each terminal voltage is not lower than that of GND terminal in consideration of transition status.

(3) Heat design

In consideration of allowable loss in actual use condition, carry out heat design with sufficient margin.

(4) Terminal to terminal shortcircuit and wrong packaging

When to package LSI onto a board, pay sufficient attention to LSI direction and displacement. Wrong packaging may destruct LSI. And in the case of shortcircuit between LSI terminals and terminals and power source, terminal and GND owing to foreign matter, LSI may be destructed.

(5) Use in a strong electromagnetic field may cause malfunction, therefore, evaluated design sufficiently.

◇ PHYSICAL DIMENSION

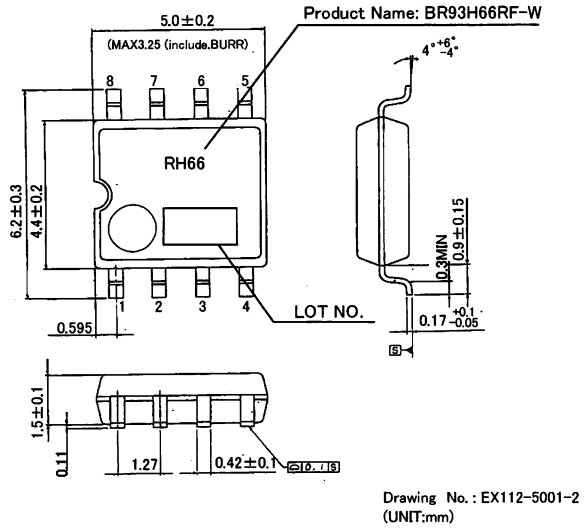

Fig.4-(a) PHYSICAL DIMENSION SOP8 (BR93H66RF-W)

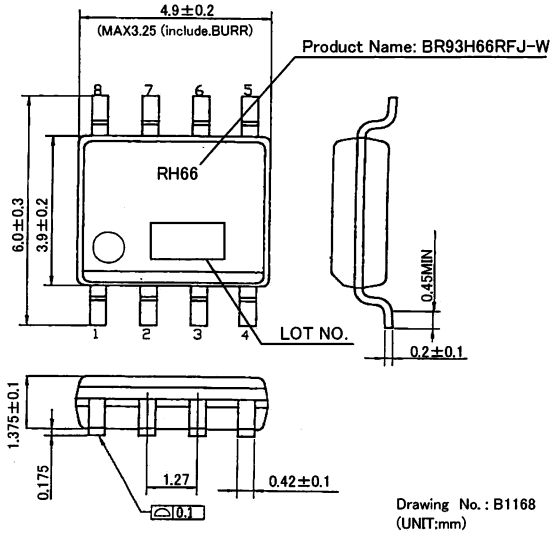

Fig.4-(b) PHYSICAL DIMENSION SOP-J8 (BR93H66RFJ-W)

Notes

- No technical content pages of this document may be reproduced in any form or transmitted by any means without prior permission of ROHM CO.,LTD.
- The contents described herein are subject to change without notice. The specifications for the product described in this document are for reference only. Upon actual use, therefore, please request that specifications to be separately delivered.
- Application circuit diagrams and circuit constants contained herein are shown as examples of standard use and operation. Please pay careful attention to the peripheral conditions when designing circuits and deciding upon circuit constants in the set.
- Any data, including, but not limited to application circuit diagrams information, described herein are intended only as illustrations of such devices and not as the specifications for such devices. ROHM CO.,LTD. disclaims any warranty that any use of such devices shall be free from infringement of any third party's intellectual property rights or other proprietary rights, and further, assumes no liability of whatsoever nature in the event of any such infringement, or arising from or connected with or related to the use of such devices.
- Upon the sale of any such devices, other than for buyer's right to use such devices itself, resell or otherwise dispose of the same, no express or implied right or license to practice or commercially exploit any intellectual property rights or other proprietary rights owned or controlled by
- ROHM CO., LTD. is granted to any such buyer.
- Products listed in this document are no antiradiation design.

The products listed in this document are designed to be used with ordinary electronic equipment or devices (such as audio visual equipment, office-automation equipment, communications devices, electrical appliances and electronic toys).
Should you intend to use these products with equipment or devices which require an extremely high level of reliability and the malfunction of with would directly endanger human life (such as medical instruments, transportation equipment, aerospace machinery, nuclear-reactor controllers, fuel controllers and other safety devices), please be sure to consult with our sales representative in advance.

About Export Control Order in Japan

Products described herein are the objects of controlled goods in Annex 1 (Item 16) of Export Trade Control Order in Japan.
In case of export from Japan, please confirm if it applies to "objective" criteria or an "informed" (by MITI clause) on the basis of "catch all controls for Non-Proliferation of Weapons of Mass Destruction.

Thank you for your accessing to ROHM product informations.

More detail product informations and catalogs are available,

please contact your nearest sales office.

Please contact our sales offices for details ;

U.S.A / San Diego	TEL : +1(858)625-3630	FAX : +1(858)625-3670
Atlanta	TEL : +1(770)754-5972	FAX : +1(770)754-0691
Dallas	TEL : +1(972)312-8818	FAX : +1(972)312-0330
Germany / Dusseldorf	TEL : +49(2154)9210	FAX : +49(2154)921400
United Kingdom / London	TEL : +44(1)908-282-666	FAX : +44(1)908-282-528
France / Paris	TEL : +33(0)1 56 97 30 60	FAX : +33(0) 1 56 97 30 80
China / Hong Kong	TEL : +852(2)740-6262	FAX : +852(2)375-8971
Shanghai	TEL : +86(21)6279-2727	FAX : +86(21)6247-2066
Dilian	TEL : +86(411)8230-8549	FAX : +86(411)8230-8537
Beijing	TEL : +86(10)8525-2483	FAX : +86(10)8525-2489
Taiwan / Taipei	TEL : +866(2)2500-6956	FAX : +866(2)2503-2869
Korea / Seoul	TEL : +82(2)8182-700	FAX : +82(2)8182-715
Singapore	TEL : +65-6332-2322	FAX : +65-6332-5662
Malaysia / Kuala Lumpur	TEL : +60(3)7958-8355	FAX : +60(3)7958-8377
Philippines / Manila	TEL : +63(2)807-6872	FAX : +63(2)809-1422
Thailand / Bangkok	TEL : +66(2)254-4890	FAX : +66(2)256-6334

Japan /
(Internal Sales)

Tokyo 2-1-1, Yaesu, Chuo-ku, Tokyo 104-0082
TEL : +81(3)5203-0321 FAX : +81(3)5203-0300

Yokohama 2-4-8, Shin Yokohama, Kohoku-ku, Yokohama, Kanagawa 222-8575
TEL : +81(45)476-2131 FAX : +81(45)476-2128

Nagoya Dainagayo Building 9F 3-28-12, Meieki, Nakamura-ku, Nagoya,Aichi 450-0002
TEL : +81(52)581-8521 FAX : +81(52)561-2173

Kyoto 579-32 Higashi Shiokouji-cho, Karasuma Nishi-iru, Shiokoujidori, Shimogyo-ku, Kyoto 600-8216
TEL : +81(75)311-2121 FAX : +81(75)314-6559

(Contact address for overseas customers in Japan)

Yokohama TEL : +81(45)476-9270 FAX : +81(045)476-9271

As of 18th. April 2005