BR605 THRU BR610

SINGLE PHASE 6.0 AMP BRIDGE RECTIFIERS

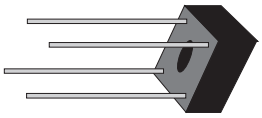

VOLTAGE RANGE

50 to 1000 Volts

CURRENT

6.0 Amperes

FEATURES

* Low forward voltage
* Low leakage current
* Mounting: Hole thru for #6 screw
* Mounting position: Any

*Bothnormal andPbfreeproductareavailable:
*Normal:80~95%Sn,5~20%Pb
*Pbfree:99SnabovecanmeetRohsenviromentsubstance directiverequest

BR-6

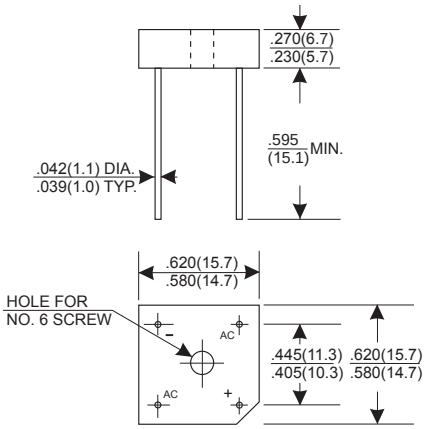

Dimensions in inches and (millimeters)

MAXIMUM RATINGS AND ELECTRICAL CHARACTERISTICS

Rating 25℃ ambient temperature unless otherwise specified.
Single phase half wave, 60Hz, resistive or inductive load.
For capacitive load, derate current by 20%.

TYPE NUMBER	BR605	BR61	BR62	BR64	BR66	BR68	BR610	UNITS
Maximum Recurrent Peak Reverse Voltage	50	100	200	400	600	800	1000	V
Maximum RMS Voltage	35	70	140	280	420	560	700	V
Maximum DC Blocking Voltage	50	100	200	400	600	800	1000	V
Maximum Average Forward Rectified Current .375"(9.5mm) Lead Length at Tc=75℃	6.0							A
Peak Forward Surge Current, 8.3 ms single half sine-wave superimposed on rated load (JEDEC method)	250							A
Maximum Forward Voltage Drop per Bridge Element at 6.0A D.C.	1.1							V
Maximum DC Reverse Current Ta=25℃	10							μA
at Rated DC Blocking Voltage Ta=100℃	200							μA
Operating Temperature Range, T_J	-65 — +150							℃
Storage Temperature Range, T_{STG}	-65 — +150							℃

RATING AND CHARACTERISTIC CURVES (BR605 THRU BR610)

FIG.1-TYPICAL FORWARD CURRENT DERATING CURVE

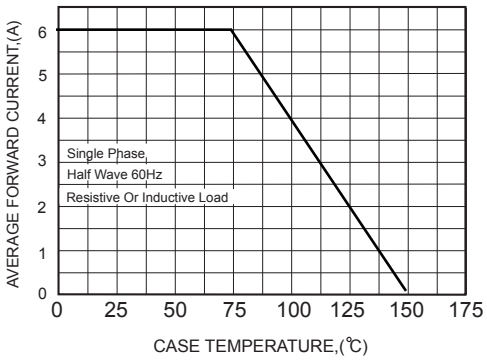

FIG.2-MAXIMUM NON-REPETITIVE FORWARD SURGE CURRENT

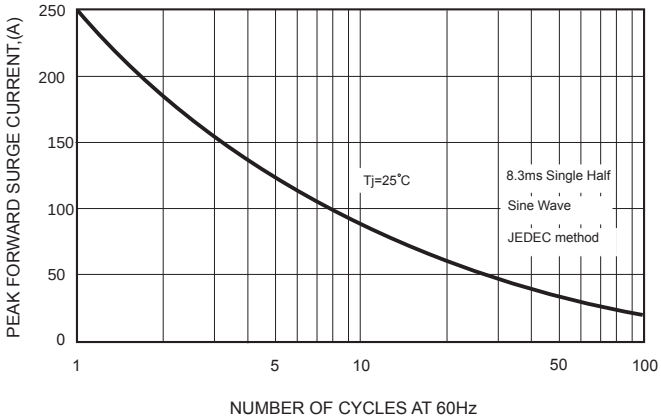

FIG.3-TYPICAL FORWARD CHARACTERISTICS

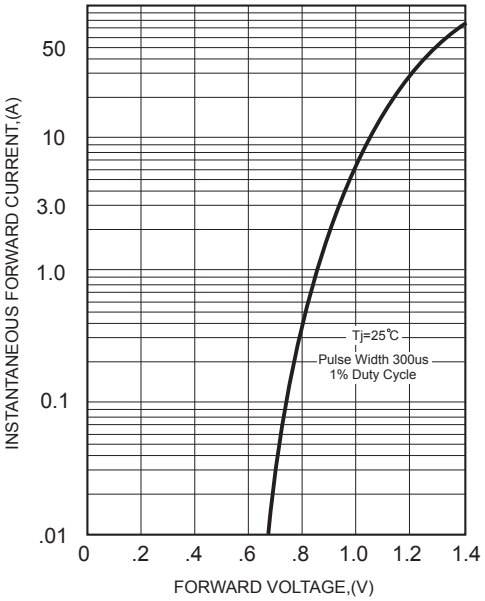

FIG.4-TYPICAL REVERSE CHARACTERISTICS

