Certificate Number: Q10561 Certificate Number: E17276

BR600 - BR610

SILICON BRIDGE RECTIFIERS

PRV : 50 - 1000 Volts

Io : 6.0 Amperes

BR6

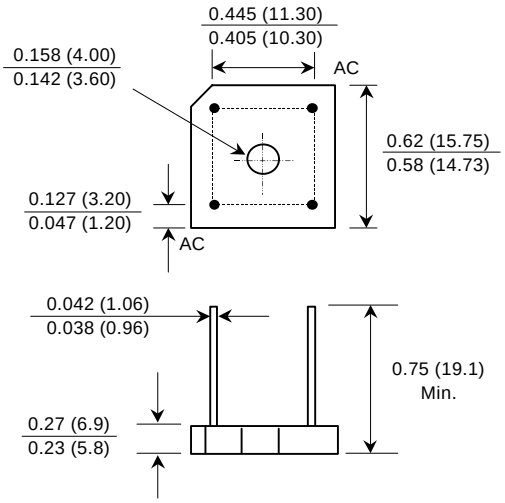

Dimensions in inches and (millimeters)

FEATURES :

* High current capability
* High surge current capability
* High reliability
* Low reverse current
* Low forward voltage drop
* Ideal for printed circuit board
* Pb / RoHS Free

MECHANICAL DATA :

* Case : Reliable low cost construction utilizing molded plastic technique
* Epoxy : UL94V-O rate flame retardant
* Lead : Axial lead solderable per MIL - STD 202 , Method 208 guaranteed
* Polarity : Polarity symbols marked on case
* Mounting position : Any
* Weight : 3.6 grams

MAXIMUM RATINGS AND ELECTRICAL CHARACTERISTICS

Rating at 25 °C ambient temperature unless otherwise specified.
Single phase, half wave, 60 Hz, resistive or inductive load.
For capacitive load, derate current by 20%.

RATING	SYMBOL	BR600	BR601	BR602	BR604	BR606	BR608	BR610	UNIT
Maximum Recurrent Peak Reverse Voltage	V_{RRM}	50	100	200	400	600	800	1000	V
Maximum RMS Voltage	V_{RMS}	35	70	140	280	420	560	700	V
Maximum DC Blocking Voltage	V_{DC}	50	100	200	400	600	800	1000	V
Maximum Average Forward Current Tc=50°C	$I_{F(AV)}$	6.0							A
Peak Forward Surge Current, Single half sine wave Superimposed on rated load (JEDEC Method)	I_{FSM}	200							A
Current Squared Time at t < 8.3 ms.	I^2t	64							A^2S
Maximum Forward Voltage per Diode at I_F =3 A.	V_F	1.0							V
Maximum DC Reverse Current Ta = 25 °C	I_R	10							µA
at Rated DC Blocking Voltage Ta = 100 °C	$I_{R(H)}$	200							µA
Typical Thermal Resistance (Note 1)	RθJC	8.0							°C/W
Operating Junction Temperature Range	T_J	- 40 to + 150							°C
Storage Temperature Range	T_{STG}	- 40 to + 150							°C

Notes :

1. Thermal Resistance from junction to case with units mounted on a 2.6" x 1.4" x 0.06" THK (6.5cm.x 3.5cm.x 0.15cm.) Al. Plate. Heatsink.

RATING AND CHARACTERISTIC CURVES (BR600 - BR610)

FIG.1 - DERATING CURVE FOR OUTPUT RECTIFIED CURRENT

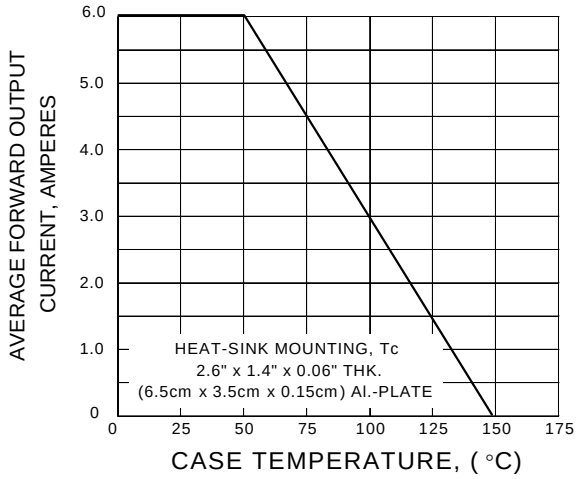

FIG.2 - MAXIMUM NON-REPETITIVE PEAK FORWARD SURGE CURRENT

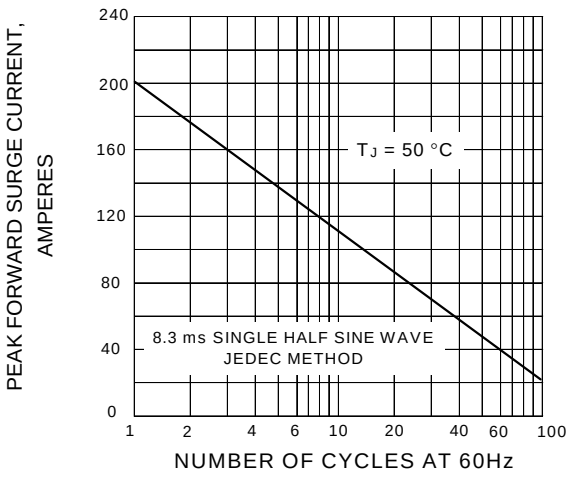

FIG.3 - TYPICAL FORWARD CHARACTERISTICS PER DIODE

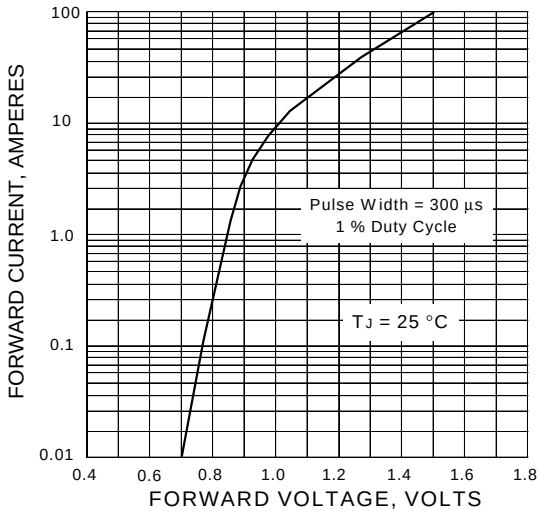

FIG.4 - TYPICAL REVERSE CHARACTERISTICS PER DIODE

