BR360 SERIES 360 Watts

KEY FEATURES

- Input under Voltage Protection
- Over Current Protection (Hiccup Mode)
- Short Circuit Protection (Hiccup Mode)
- Over Voltage Protection (Hiccup Mode)
- Over Temperature Protection (Self-recovery)
- Remote ON/OFF Control
- Remote Sense
- Output Voltage Trim
- Negative Logic：BR360-3.3S and BR360-12S
- Positive Logic：BR360-48S
- UL60950-1 and CSA C22.2 No. 60950-1-07
- Meet UL94V-0 Flammability Requirements
- RoHS6 Compliant
- Size: 2.4 x 2.28 x 0.5 Inches
- 3-Years Product Warranty

DESCRIPTION

The BR360 series DC-DC converter are high-efficiency and power density standard 1/2 brick isolated models. This series contain 6 modules, output power from 100W to 360W, output voltage covering 3.3V, 5V, 12V and 48V four levels. All models support primary ON/OFF control, remote Sense and Trim function. This series which conform to the RoHS6 requirement can be used in the fields of communication, data transmission and distributed power supply system.



ELECTRICAL SPECIFICATIONS

Conditions: TA = 25°C (77°F), Airflow = 1.0 m/s (200 LFM), Vin = 48 V, Vout = 12 V ， unless otherwise specified.

Model No.			BR360-3.3S	BR360-12S	BR360-48S
Max Output Wattage (W)			198W	360W	153.6W
Input	Voltage (V.DC.)		48V (36~75V)		
	Current (A) (max)		7.5A (Vin = 0 - 75 V; Iout = 60 A)	11A (Vin= 36 V; Iout = 30 A)	5.5A (Vin= 36 V; Iout = 3.2 A)
	No-Load Loss (W) (typ.)		4W	4.3W	1.2W
Output	Voltage Set Point (V.DC.)		3.3V	12V	48V
	Current (A) (max.)		60A	30A	3.2A
	Line Regulation (LL-HL) (typ.)		±0.2%	0.3%	±1%
	Load Regulation (0-100%) (typ.)		±0.3%	0.5%	±1%
	Ripple & Noise (peak to peak) (typ.) (Oscilloscope Bandwidth:20 MHz)		150 mV	300 mV	300 mV
	Efficiency (typ.) (Vin = 48 V; TA=25°C (77°F))	100% Load	92%	94.8%	93%
		50% Load	93%	95.6%	92.5%
		20% Load	90%	92.9%	89.5%
Protection	Over Power Protection		Hiccup mode		
	Over Current Protection		Hiccup mode		
	Over Voltage Protection		3.8~5V Hiccup mode	14~16.5V Hiccup mode	53~59V Hiccup mode
	Short Circuit Protection (max.)		Hiccup mode		
	Over Temperature Protection		Threshold:105~130°C / Hysteresis:5°C (min.) Self-recovery (The values are obtained by measuring the temperature of the PCB bottom near the thermal resistor.)		
Isolation	Voltage (V.DC.)		1500 VDC (Basic Isolation and Functional Isolation)		
Environment	Operating Temperature		-40°C…+85°C		
	Storage Temperature		-55°C…+125°C		
	Temperature Coefficient (max.)		0.02 % Vout / °C (TA = -40°C to +85°C (-40°F to +185°F))		
	Humidity		95% RH		
	MTBF		1.5 Million Hours (Airflow = 1.5 m/s (300 LFM); TA = 40°C (104°F); 80% load; Telcordia SR332 Method 1 case 3)		
Safety	Agency Approvals		CE, UL, TUV		
EMC	EMI (Conducted & Radiated Emission)		UL60950-1 and IEC/EN60950 Class B Requirements in FCC and EN55022 (After Connecting to an External Filtering Circuit)		
Physical	Dimension (L x W x H)		2.4 x 2.28 x 0.5 Inches (61.0 x 57.9 x 13.0 mm) Tolerance ±0.5 mm		
	Weight		100 g	67.6 g	82 g
Other	Remote On/Off Voltage	Low level (V.DC.)	-0.7~1.2V	-2~0.8V	-0.7~1.2V
		High level (V.DC.)	3.5~12V	3.5~18V	3.5~12V
	On/Off Current	Low level (mA) (max.)	1mA		

BR360 SERIES 360 Watts

NOTE

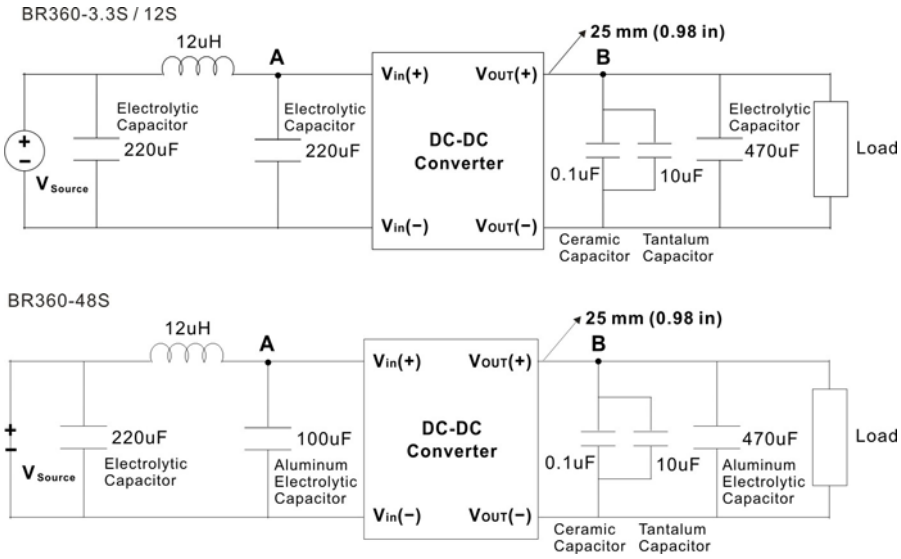

1. During the test of input reflected ripple current, the input terminal must be connected to a 12uH inductor and a 220uF electrolytic capacitor.
2. Point B, which is for testing the output voltage ripple, is 25 mm (0.98 in.) away from the Vout(+) pin.

DERATING

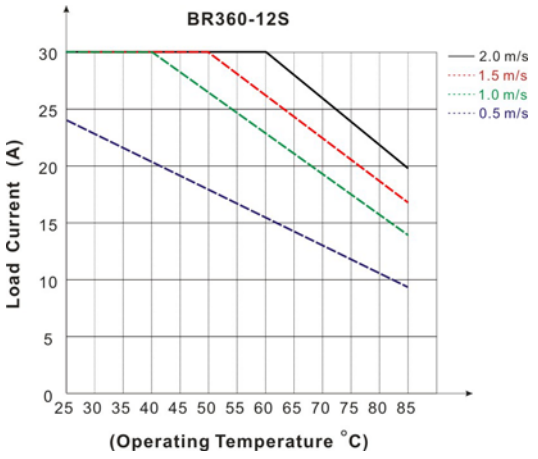

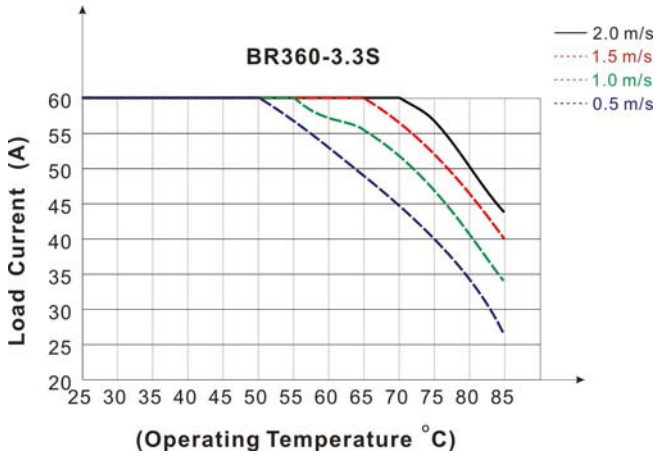

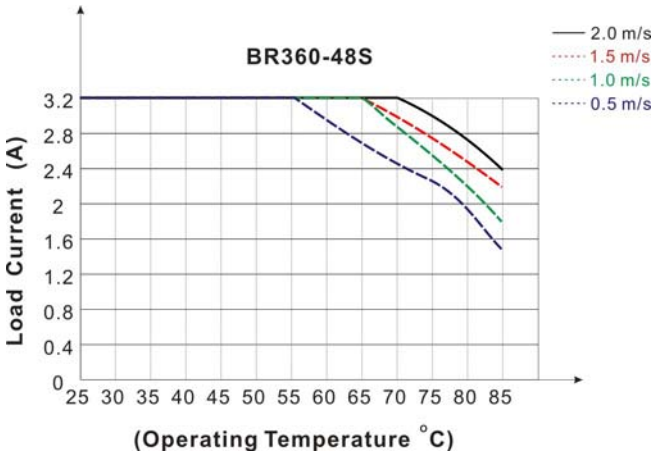

MECHANICAL DIMENSION

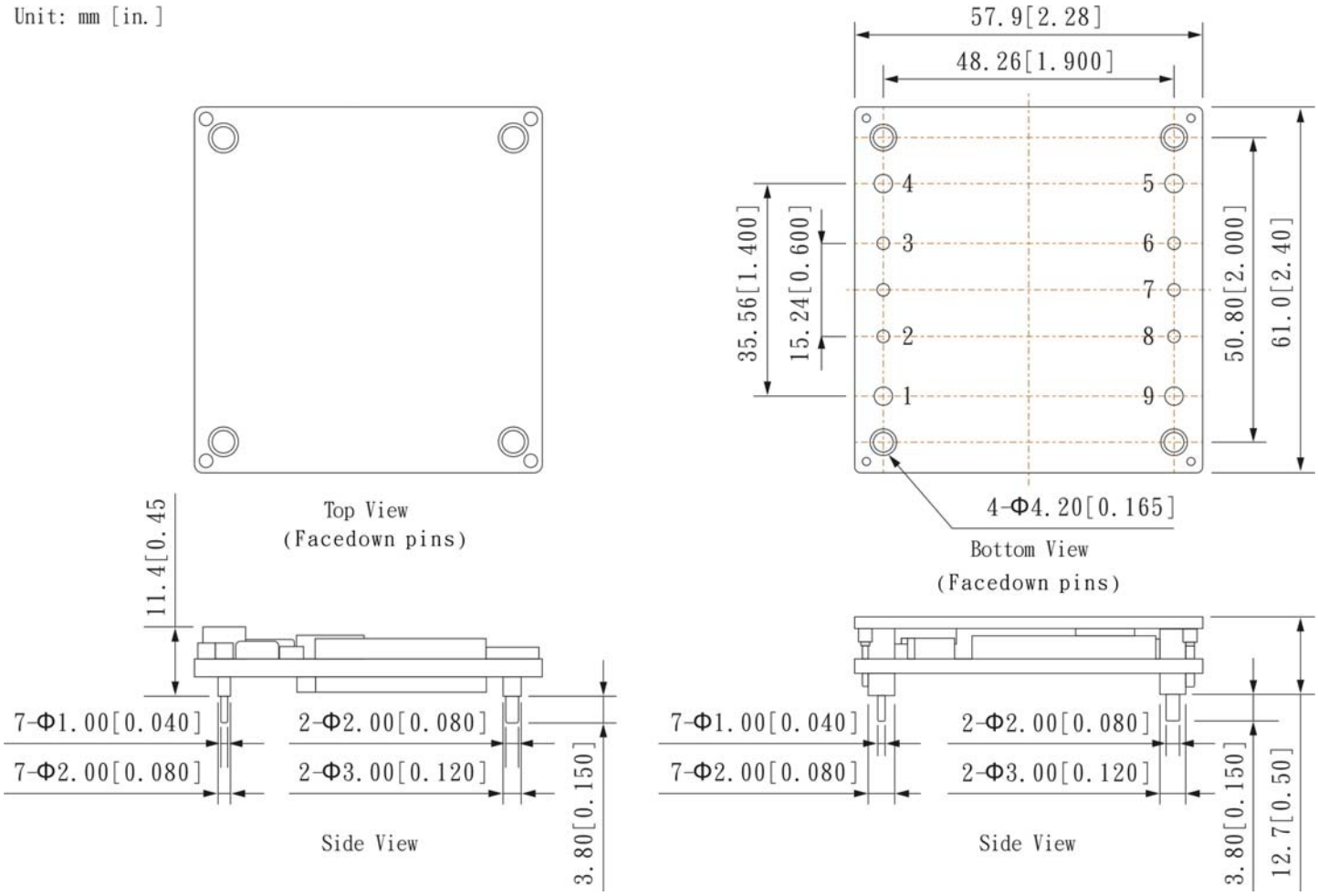

PIN#	3.3S 12S	48S
1	+DC IN	+DC IN
2	ON / OFF CTL	ON / OFF CTL
3	NC	CASE
4	-DC IN	-DC IN
5	-DC OUT	-DC OUT
6	-Sense	-Sense
7	Trim	Trim
8	+Sense	+Sense
9	+DC OUT	+DC OUT

DIMENSIONS TOLERANCE

.x	± 0.2 mm (0.007 in)
.xx	± 0.13 mm (0.005 in)