bqTESLA Wireless Power Transmitter Manager EVM

The bqTESLA™ wireless power evaluation kit from Texas Instruments is a high-performance, easy-to-use development kit for the design of wireless power solutions. Consisting of a single-channel transmitter and power supply side receiver and associated magnetics, the kit enables designers to speed the development of their end-applications. The bq500210EVM evaluation module (EVM) provides all basic functions of WPC 1.0-compliant wireless charger pad. The EVM is intended to be used with bq51013EVM or any other WPC 1.0-compliant receiver.

Contents

1 Applications 2
2 bq500210EVM-689 Electrical Performance Specifications 2
3 Modifications 2
4 Connector and Test Point Descriptions 2
4.1 Input/Output Connections 2
4.2 Jumpers/Switches 3
4.3 Test Point Descriptions 3
5 Schematic and Bill of Materials 5
6 Test Setup 10
6.1 Equipment 10
6.2 Equipment Setup 10
7 bq500210EVM-689 Assembly Drawings and Layout 12
8 Reference 16

List of Figures

1 HPA689EVM Schematic (Page 1 of 3) 5
2 HPA689EVM Schematic (Page 2 of 3) 6
3 HPA689EVM Schematic (Page 3 of 3) 7
4 Equipment Setup 10
5 Efficiency v Power, HPA689 Transmitter and HPA725 Reciver 12
6 Assembly Top 13
7 Top Silk 13
8 Top Layer 14
9 Layer 2 14
10 Layer 3 15
11 Bottom Layer 15

List of Tables

1 bq500210EVM-688 Electrical Performance Specifications 2
2 Bill of Materials 8

bqTESLA is a trademark of Texas Instruments.

Copyright © 2011–2012, Texas Instruments Incorporated

1 Applications

The bq500210EVM-689 evaluation module demonstrates the transmitter portion of the bqTESLA™ wireless power system. This transmitter EVM is a complete transmitter-side solution that powers a bqTESLA™ receiver. The bq500210EVM requires single 19-V at 0.5 A power supply to operate and combines on the single printed-circuit board the transmitter electronics, input power socket, LED indicators, and the transmitting coil. The open design allows easy access to key points of the electrical schematic. The board has installed connectors for optional JTAG and serial interfaces that can be helpful to advanced users. This EVM has the following features.

- WPC-certified transmitter
- Transmitter mounting pad to provide correct receiver interface
- Receiver output voltage of 5 V up to 1 A
- Standard A1-type transmitter coil
- LED indicates power transfer state and buzzer indicates start of power transfer.

2 bq500210EVM-689 Electrical Performance Specifications

Table 1 provides a summary of the bq500210EVM-689 performance specifications. All specifications are given for an ambient temperature of 25°C.

Table 1. bq500210EVM-688 Electrical Performance Specifications

Parameter		Notes and Conditions	Min	Typ	Max	Unit
INPUT CHARACTERISTICS						
V_{IN}	Input Voltage		18.5	19	19.5	V
I_{IN}	Input Current	V_{IN} = Nom, I_{OUT} = Max		0.3	0.5	A
	Input No Load Current	V_{IN} = Nom, I_{OUT} = 0 A		20	50	mA
OUTPUT CHARACTERISTICS						
V_{OUT}	Output Voltage	V_{IN} = Nom, I_{OUT} = Nom	4.5	5	5.1	V
	Output Ripple	V_{IN} = Nom, I_{OUT} = Max			200	mV_{PP}
I_{OUT}	VIN = Min to Max	V_{IN} = Min to Max	0		1	A
	Output Over Current	V_{IN} = Nom, V_{OUT} = V_{OUT1} - 5%	1		1.1	A
SYSTEMS CHARACTERISTICS						
F_S	Switching Frequency		110	145	200	kHz
ηpk	Peak Efficiency	V_{IN} = Nom; Porx = 2.5		72%		
η	Full-Load Efficiency	V_{IN} = Nom, I_{OUT} = Max		70%		

3 Modifications

See the data sheet (SLUSAL8) when changing components. The board is laid out so that a shield can be placed over the active circuit area; Laird Technology BMIS-207 can be used.

4 Connector and Test Point Descriptions

4.1 Input/Output Connections

The connection points are described in the following paragraphs.

4.1.1 J1 – Vin

Input power 19 V ±500 mV; connected to J2 also.

4.1.2 J2 – GND

Input power return for input power; connected to J2 also.

Copyright © 2011–2012, Texas Instruments Incorporated

4.1.3 J3 – I2C interface

Factory use only

4.1.4 J4 – JTAG (Not Installed)

Factory use only

4.1.5 J5 – Metal Object Detection Threshold

Connection point for external resistor to set trip point for Metal Object Detection. See the bq500210 data sheet for more information (SLUSAL8).

4.1.6 J6 – Select LED Mode

Connection point for external resistor to select LED mode. See the bq500210 data sheet for more information.

4.1.7 J7 – Vin

Input power 19 V ±500 mV; connected to J2 also.

4.1.8 JP1 – NTC

Connection point for external temperature sensor. See the data sheet for more information.

4.2 Jumpers/Switches

The control jumpers are described in the following paragraphs.

4.2.1 R23 – LED Scheme

LED indication scheme set resistor; default 42.2 kΩ. For a detailed function description, see the bq500210 data sheet

4.2.2 R51 – MOD-THR

MOD threshold set resistor; default 100 kΩ. For a detailed function description, see the bq500210 data sheet.

4.3 Test Point Descriptions

The test points are described in the following paragraphs.

4.3.1 TP1 – Coil Monitor 1

Test point for measuring ac voltage applied to TX coil.

4.3.2 TP2 – Coil Monitor 2

Test point for measuring ac voltage applied to TX coil.

4.3.3 TP3 – PWR GND

Ground for Switch circuits.

4.3.4 TP4 – Analog GND

Low noise GND

Copyright © 2011–2012, Texas Instruments Incorporated

4.3.5 TP5 – Analog GND

Low noise GND

4.3.6 TP6 – Analog GND

Low noise GND

4.3.7 TP7 – Analog GND

Low noise GND

4.3.8 TP8 – DC Buzzer Output

Connection point for external dc buzzer; logic high for 500 ms at start of power transfer to receiver unit.

4.3.9 TP9 – 3.3V Input DC Current

3.3V output from U5 used for low power circuit.

4.3.10 TP10 - Filtered 3.3V

3.3V output with additional filtering for A to D convererters.

4.3.11 TP11 – Gate Drive Voltage

Input voltage to U2, gate driver for power switches.

4.3.12 TP12 – MSP430 3.3V

Filtered 3.3V for MSP430, U4.

4.3.13 TP13 – Demodulation Comm 1 Output

Primary communications channel, input to bq500210 from demodulation circuit.

4.3.14 TP14 – Sleep

Output from bq500210 to 500 ms timer circuit.

Copyright © 2011–2012, Texas Instruments Incorporated

5 Schematic and Bill of Materials

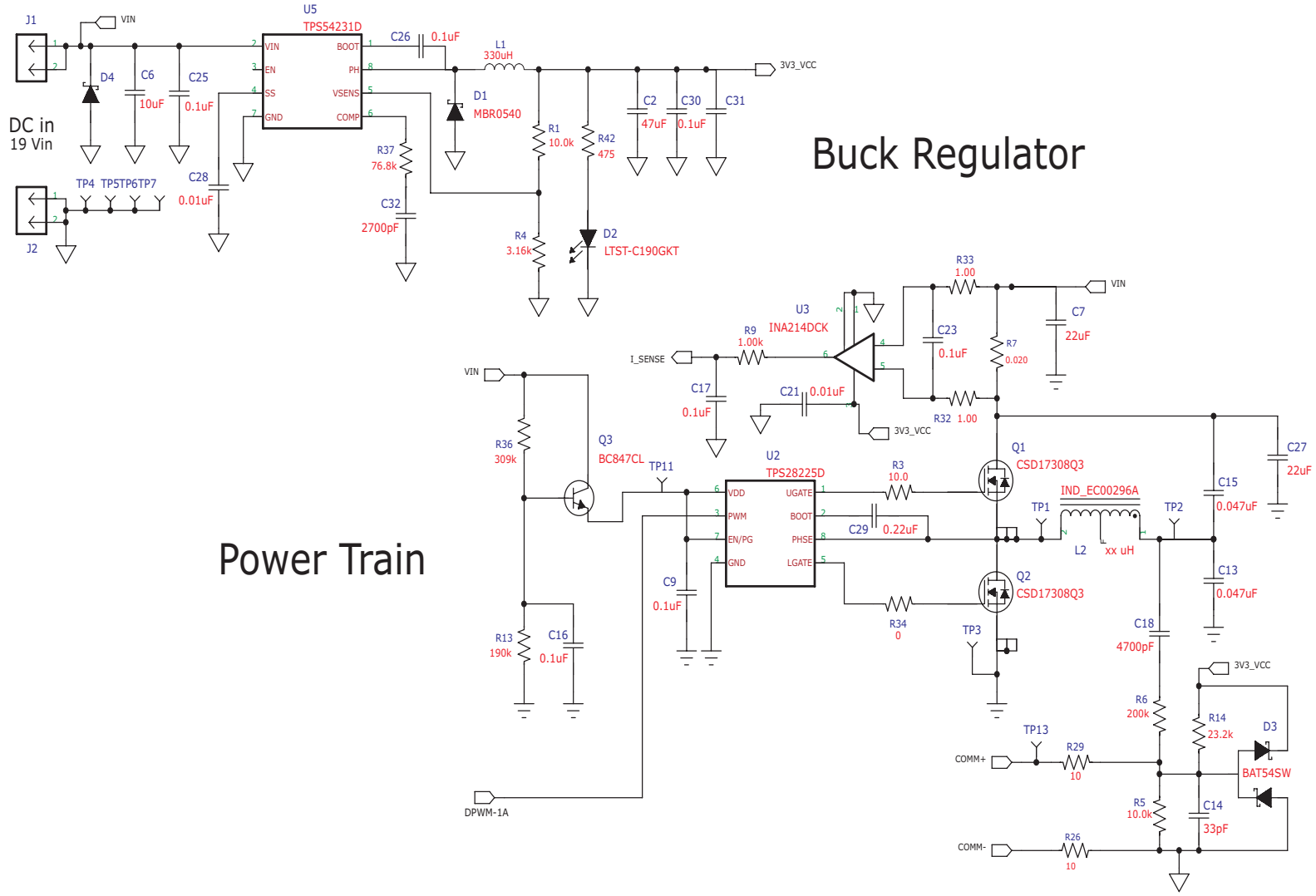

Figure 1. HPA689EVM Schematic (Page 1 of 3)

Copyright © 2011–2012, Texas Instruments Incorporated

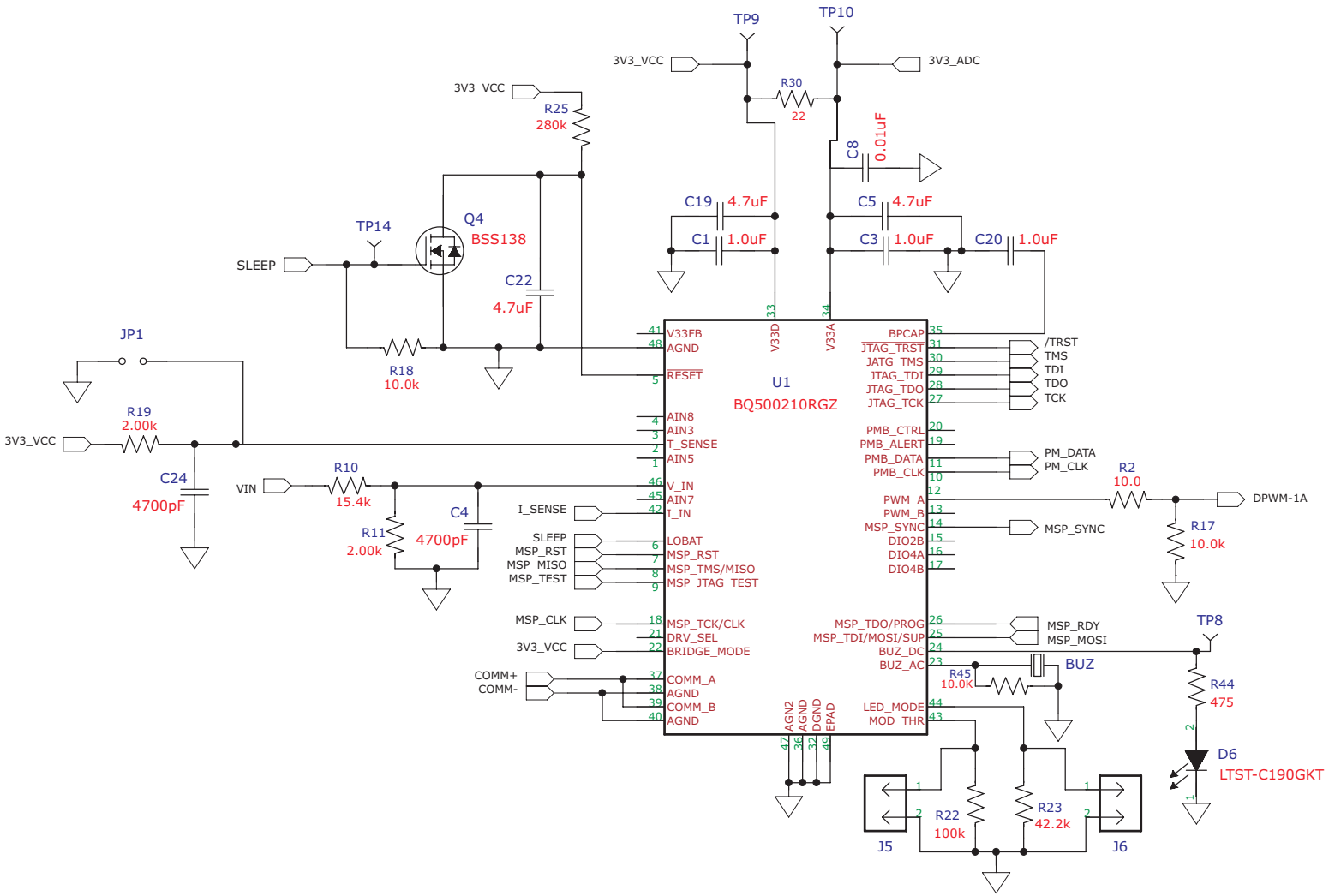

Figure 2. HPA689EVM Schematic (Page 2 of 3)

Copyright © 2011–2012, Texas Instruments Incorporated

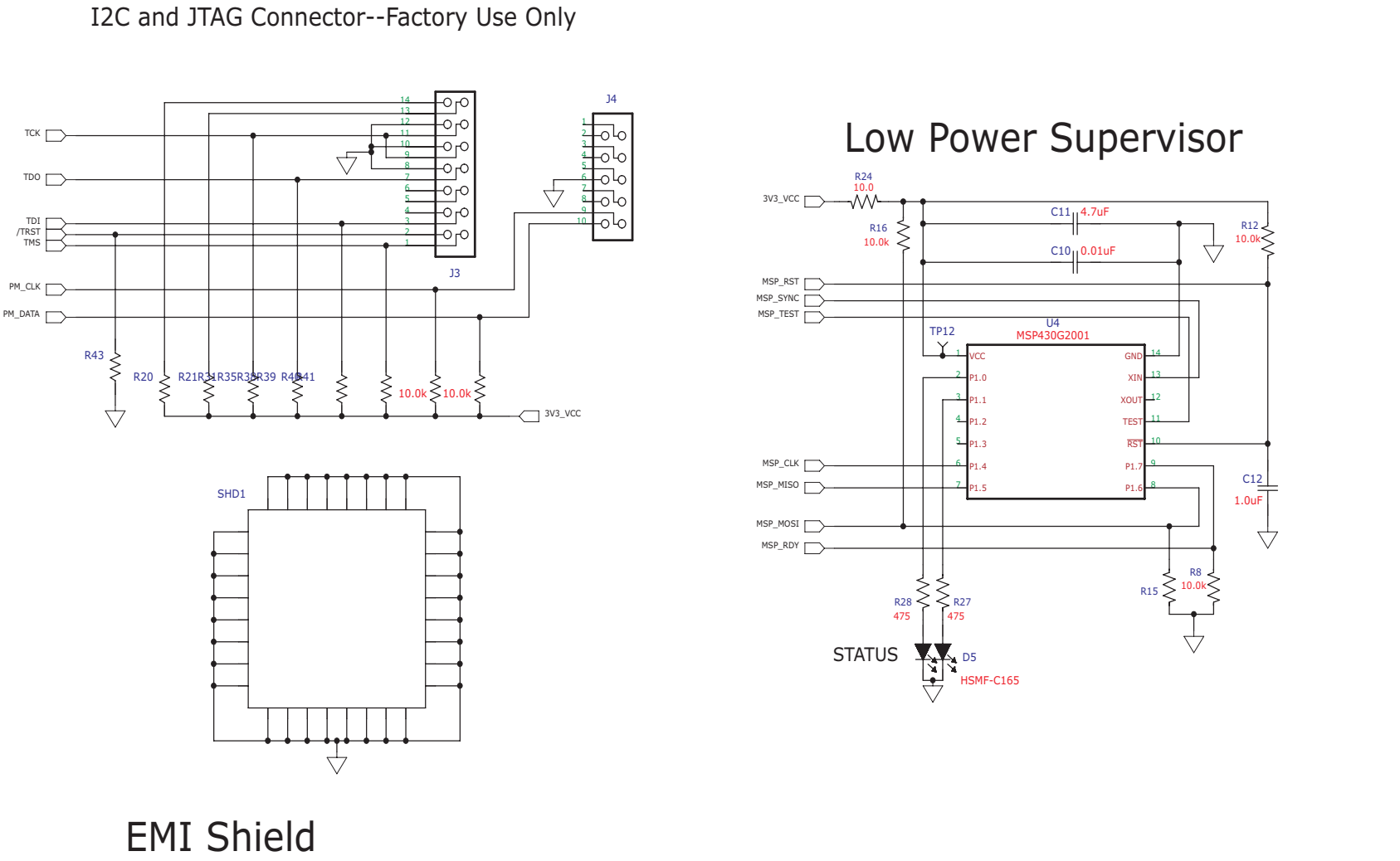

Figure 3. HPA689EVM Schematic (Page 3 of 3)

Copyright © 2011–2012, Texas Instruments Incorporated

Table 2. Bill of Materials

Count	RefDes	Value	Description	Size	Part Number	MFR
1	BUZ	Buzzer	Piezoelectronic, 12 mm	12 mm	PS1240P02CT3	TDK
4	C1 C3 C12 C20	1.0uF	Capacitor, Ceramic, 16V, X7R, 20%	0603	STD	STD
4	C5 C11 C19 C22	4.7uF	Capacitor, Ceramic, 10V, X7R, 20%	0603	STD	STD
1	C14	33pF	Capacitor, Ceramic, 50V, C0G, 5%	0603	STD	STD
2	C15 C13	0.047uF	Capacitor, Ceramic, 100V, C0G, 5%	1210	Std	STD
7	C17 C9 C23 C16 C25-26 C30	0.1uF	Capacitor, Ceramic, 50V, X7R, 10%	0603	STD	STD
1	C2	47uF	Capacitor, Ceramic, 6.3V, X5R, 20%	1206	STD	STD
1	C29	0.22uF	Capacitor, Ceramic, 50V, X7R, 20%	0603	STD	STD
0	C31	Open	Capacitor, Ceramic,	1206	STD	STD
1	C32	2700pF	Capacitor, Ceramic, 50V, C0G, 5%	0603	STD	STD
3	C4 C18 C24	4700pF	Capacitor, Ceramic, 50V, X7R, 10%	0603	STD	STD
1	C6	10uF	Capacitor, Ceramic, 35V, X5R, 20%	1206	STD	STD
2	C7 C27	22uF	Capacitor, Ceramic, 25V, X5R, 20%	1210	Std	STD
4	C8 C10 C21 C28	0.01uF	Capacitor, Ceramic, 50V, X7R, 10%	0603	STD	STD
1	D1	MBR0540	Diode, Schottky, 0.5A, 40V	SOD-123	MBR0540T1G	On Semi
2	D2 D6	LTST-C190GKT	Diode, LED, Green, 2.1-V, 20-mA, 6-mcd	0603	LTST-C190GKT	Lite On
1	D3	BAT54SW	Diode, Dual Schottky, 200mA, 30V	SOT523	BAT54SWT1G	On Semi
0	D4	Open	Diode, Schottky, 0.5A, 30V	SOD-123	MMSZ5251BT1G	On Semi
1	D5	HSMF-C165	Diode, Bi-Color LED, [GRN/RED] 20mA, 52 mW Max.	0603	HSMF-C165	Avago
1	L1	330uH	Inductor, SMT, 155mA, 1.8ohm	0.189 x 0.189 inch	LPS5030-334MLB	Coilcraft
		330uH	Inductor, SMT, 170mA, 1.7ohm	4.8 x 4.8 mm	744043331	Wurth Elecktronic
1	L2	TX Coil	WPC Compliant TX Coil Set with Ferrite Shield	See note 1	ECOO296A	Elytone
		TX Coil	WPC Compliant TX Coil Set with Ferrite Shield	See note 2	760308101	Wurth Elecktronic
		TX Coil	WPC Compliant TX Coil Set with Ferrite Shield	See note 3	Y31-60014F	E & E Magnetic
		TX Coil	WPC Compliant TX Coil Set with Ferrite Shield	See note 4	X1387	Toko
2	Q1-2	CSD17308Q3	MOSFET, NChan, 30V, 13A, 9.4 milliOhm	QFN3.3x3.3 mm	CSD17308Q3	TI
1	Q3	BC847CL	TRANSISTOR, NPN, HIGH-PERFORMANCE, 500mA	SOT-23	BC847CLT1G	ON Semi
1	Q4	BSS138	MOSFET, Nch, 50V, 0.22A, 3.5 Ohm	SOT23	BSS138	Fairchild
10	R1 R5 R8 R12 R16-18 R40 R41 R45	10.0k	Resistor, Chip, 1/16W, 1%	0603	Std	Std
5	R2, R3, R24, R26, R29	10	Resistor, Chip, 1/16W, 1%	0603	Std	Std
1	R4	3.16k	Resistor, Chip, 1/16W, 1%	0603	Std	Std

Copyright © 2011–2012, Texas Instruments Incorporated

Table 2. Bill of Materials (continued)

Count	RefDes	Value	Description	Size	Part Number	MFR
1	R6	200k	Resistor, Chip, 1/16W, 1%	0603	Std	Std
1	R7	0.02	Resistor, Chip, 1/10W, 1%	0805	Std	Std
1	R9	1.00k	Resistor, Chip, 1/16W, 1%	0603	Std	Std
1	R10	15.4k	Resistor, Chip, 1/16W, 1%	0603	Std	Std
2	R11 R19	2.00k	Resistor, Chip, 1/16W, 1%	0603	Std	Std
1	R13	191k	Resistor, Chip, 1/16W, 1%	0603	Std	Std
1	R14	23.2k	Resistor, Chip, 1/16W, 1%	0603	Std	Std
0	R15 R20-21 R31 R35 R38 R39 R43	Open	Resistor, Chip, 1/16W, 1%	0603	Std	Std
1	R22	100k	Resistor, Chip, 1/16W, 1%	0603	Std	Std
1	R23	42.2k	Resistor, Chip, 1/16W, 1%	0603	Std	Std
3	R28 R27 R42 R44	475	Resistor, Chip, 1/16W, 1%	0603	Std	Std
1	R30	22	Resistor, Chip, 1/10W, 1%	0805	Std	Std
2	R32-33	1	Resistor, Chip, 1/16W, 1%	0603	Std	Std
1	R34	0	Resistor, Chip, 1/16W, 1%	0603	Std	Std
1	R25	280k	Resistor, Chip, 1/16W, 1%	0603	Std	Std
1	R36	309k	Resistor, Chip, 1/16W, 1%	0603	Std	Std
1	R37	76.8k	Resistor, Chip, 1/16W, 1%	0603	Std	Std
0	SHD1	Open	Shield, Copper	44.4x44.4 mm	BMI-S-207-F	Laird Tech
1	U1	BQ500210RGZ	IC, Qi Compliant Wireless Power Transmitter Manager	VQFN	BQ500210RGZ	TI
1	U2	TPS28225D	IC, High Frequency 4-Amp Sink Synchronous Buck MOSFET Driver	SO8	TPS28225D	TI
1	U3	INA214DCK	IC, Voltage Output, High or Low Side Measurement, Bi-Directional Zerø-Drift Series	SC-70	INA214AIDCKT	TI
1	U4	MSP430G2001	IC, Mixed Signal Microcontroller	TSSOP	MSP430G2001IPW 14	TI
1	U5	TPS54231D	IC, 2A, 28V Input, Step Down Swift DC/DC Converter W/ eco-Mode	SO8	TPS54231D	TI
Notes:	1. Elytone Electronics Co., Ltd.: Sales Exec Annie Jya Tel (Taiwan) : www.elytone.com.tw 2. Wurth Elektronik, Oliver Opitz, Oliver.Opitz@we-online.de 3. E&E Magnetic Products, Ltd.: www.eleceltek.com 4. TOKO: www.tokoam.com					

Copyright © 2011–2012, Texas Instruments Incorporated

6 Test Setup

6.1 Equipment

6.1.1 bqTESLA™ Receiver

Use bq51013EVM-725 (BQ51013EVM) or WPC Gen 1.0-compliant receiver to work with this EVM.

6.1.2 Voltage Source

Input voltage source must provide regulated dc voltage of 19 V and be able to deliver at least 0.5-A continuous load current, current limit should be set to 1A.

6.1.3 Meters

Output voltage can be monitor at bq51013EVM-725 TP7 with a voltmeter. Input current into the load must be monitored with an appropriate ammeter. Transmitter input current and voltage can be monitored also, but the meter must use averaging function for reducing error due to communications packets.

6.1.4 Loads

A single load is required for 5 V with a maximum current of 1 A. The load can be resistive or electronic.

6.1.5 Oscilloscope

A dual-channel oscilloscope with appropriate probes is used to observe the COMM_DRV signal at bq51013EVM-725 TP3 and other signals. .

6.1.6 Recommended Wire Gauge

For proper operation, 22 AWG wire is recommended when connecting the bq500210EVM-689 to input supply and bq51013EVM-725 to load.

6.2 Equipment Setup

- With power supply OFF, connect supply to bqTESLA™ transmitter.
- Connect Vin positive power source to J1 and negative terminal of the Vin source connected to J2.
- Do not place bqTESLA™ receiver on transmitter. Connect load to J3 with return to J4, monitor current through load with ammeter, and monitor current to load at TP7. All voltmeters must be Kelvin connected (at the pin) to the point of interest.
-

6.2.1 Equipment Setup Diagram

The diagram in Figure 4 shows the test setup.

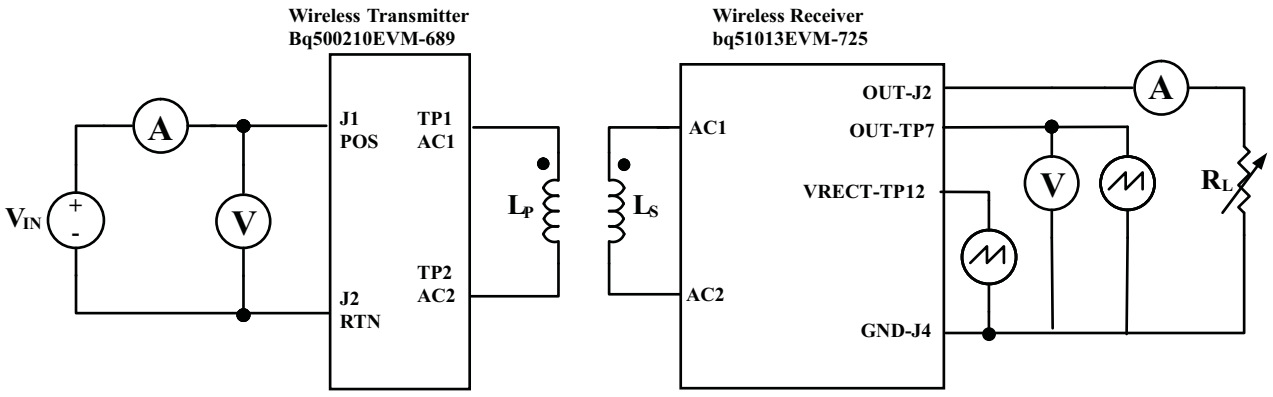

Figure 4. Equipment Setup

Copyright © 2011–2012, Texas Instruments Incorporated

6.2.2 EVM Procedures

This section guides the user through a few general test procedures to exercise the functionality of the presented hardware. Some key notes follow:

6.2.2.1 START UP NO RX

Turn on V_{IN}, and observe that the Green Power LED D2 illuminates. Status LED D5 will be off until power tranfer starts.

Apply the scope probe to the test point TP1 and observe a single pulse bursts approximately every 0.5 s. This is Analog Ping probing environment for the presence of a receiver placed on the Tx coil.

6.2.2.2 APPLY RX

Place bq51013EVM-725 EVM on the top of the transmitting coil. Align centers of the receiving and transmitting coils across each other. In the next few seconds, observe Status LED D5 illuminates green, indicating that communication between transmitter and receiver is established and power transfer has began.

- Buzzer will sound at the start of power transfer. Status LED D5 flashes green light during power transfer.
- Typical output voltage is 5 V, and the output current range is 0 mA to 1A.
- Observe continuous sine-wave on the test point TP1 when power transfer is active, frequency will be between 110kHz and 205kHz.
- Make tests and measurements applicable to a normal 5V power supply.

6.2.2.3 EFFICIENCY

To measure system efficiency, measure the output voltage, the output current, input voltage, and input current and calculate efficiency as the ratio of the output power to the input power. It is recommended to average the input current, the comm pulses will modulate the input current distorting the reading. See Figure 5 for efficiency.

6.2.2.4 PARASITIC METAL OBJECT DETECTION

To test the Metal Object Detection (MOD) function. In addition to loading on the output of bq51013EVM-725, apply an electronic load in constant power mode between secondary GND (J4) and TP12 – the output of the secondary side rectifier. Increasing load power from 0 W to over 0.5 W, observe LED D5 of bq500210EVM turning red and the power transfer stopped in approximately 20 s after the MOD threshold was exceeded.

6.2.2.5 THERMAL PROTECTION, NTC

Thermal protection is provided by an NTC resistor connected to JP1. At 1.00V on the sense side (U1-2) thermal fault will be set and unit is shutdown, Status LED D5 will illuminate red. Typical resistor value for fault is 850 ohms. System will try to restart in 5 minutes.

Copyright © 2011–2012, Texas Instruments Incorporated

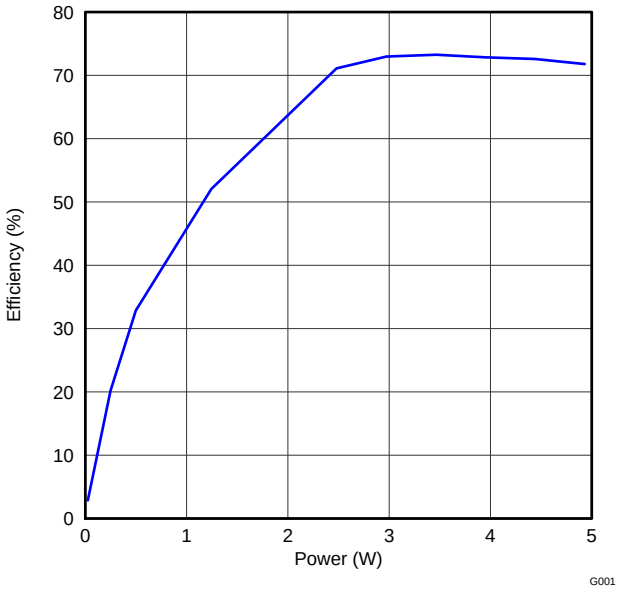

Figure 5. Efficiency v Power, HPA689 Transmitter and HPA725 Reciver

7 bq500210EVM-689 Assembly Drawings and Layout

The following figures show the design of the bq500210EVM printed-circuit board (PCB). The EVM has been designed using a 4-layer, 2-oz, copper-clad circuit board 13.2 cm × 7.24 cm with all components in a 4.5-cm x 4.5-cm active area on the top side and all active traces to the top and bottom layers to allow the user to easily view, probe, and evaluate the bq500210 control IC in a practical application. Moving components to both sides of the PCB or using additional internal layers can offer additional size reduction for space-constrained systems.

Coil Grounding – A ground plane area under the coil is recommended to reduce noise coupling into the receiver. Ground plane for the EVM is slightly larger than coil footprint and grounded at one point back to the circuit area.

Coil Stack Up and Mounting – The EVM mounting stack-up is as follows:

1. Transmitter coil thickness – 6 mm
2. Sil pad – 0.5 mm
3. Al shim – 1.5 mm

   The overall stack-up is under compression from the cover plate. The AL shim and sil pad is optional for a customer solution optimized for size.

Note: The cover thickness is 0.93 inch, or 2.4 mm is the z-gap thickness for the transmitter.

Copyright © 2011–2012, Texas Instruments Incorporated

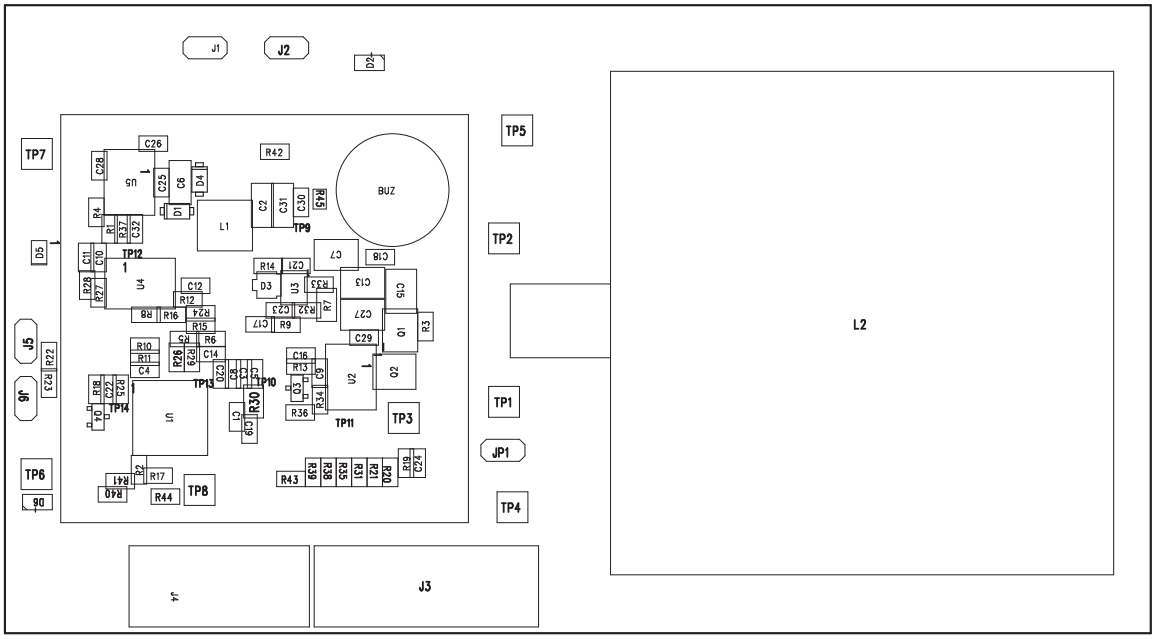

A1

Figure 6. Assembly Top

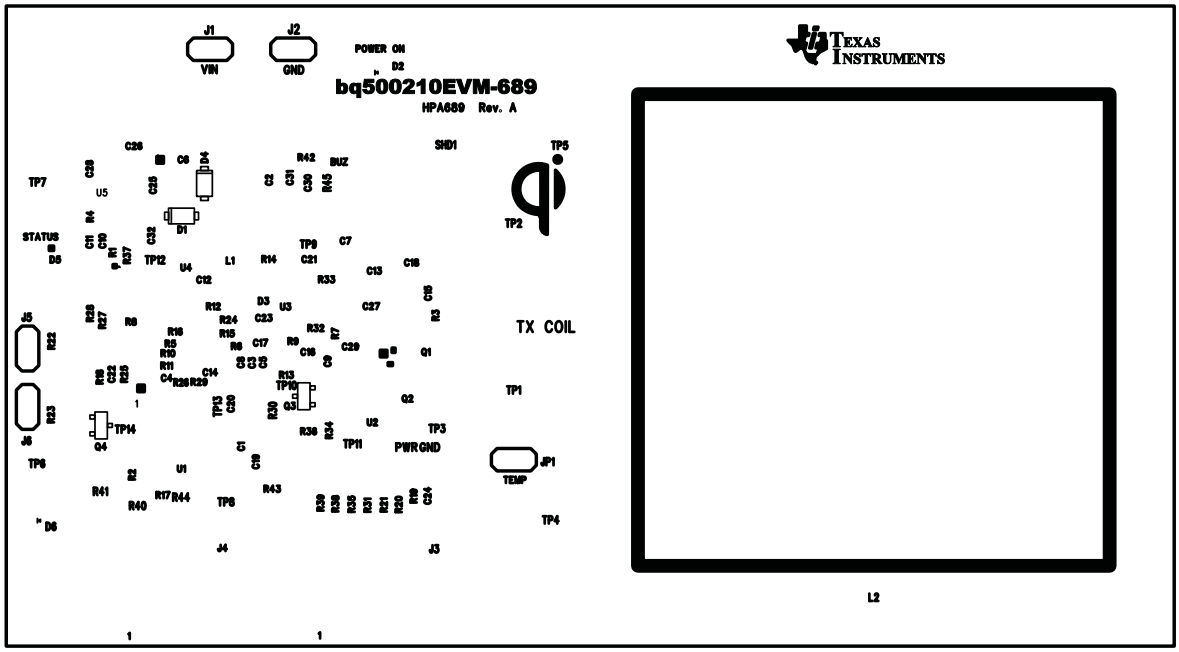

S1

Figure 7. Top Silk

Copyright © 2011–2012, Texas Instruments Incorporated

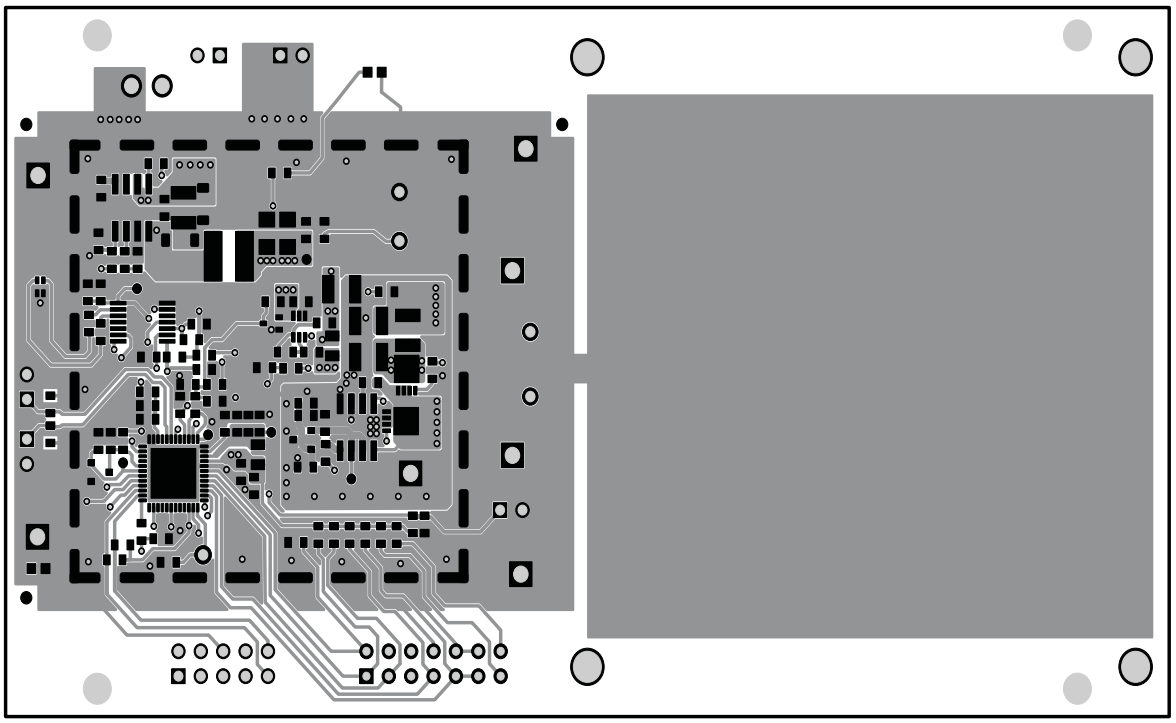

Figure 8. Top Layer

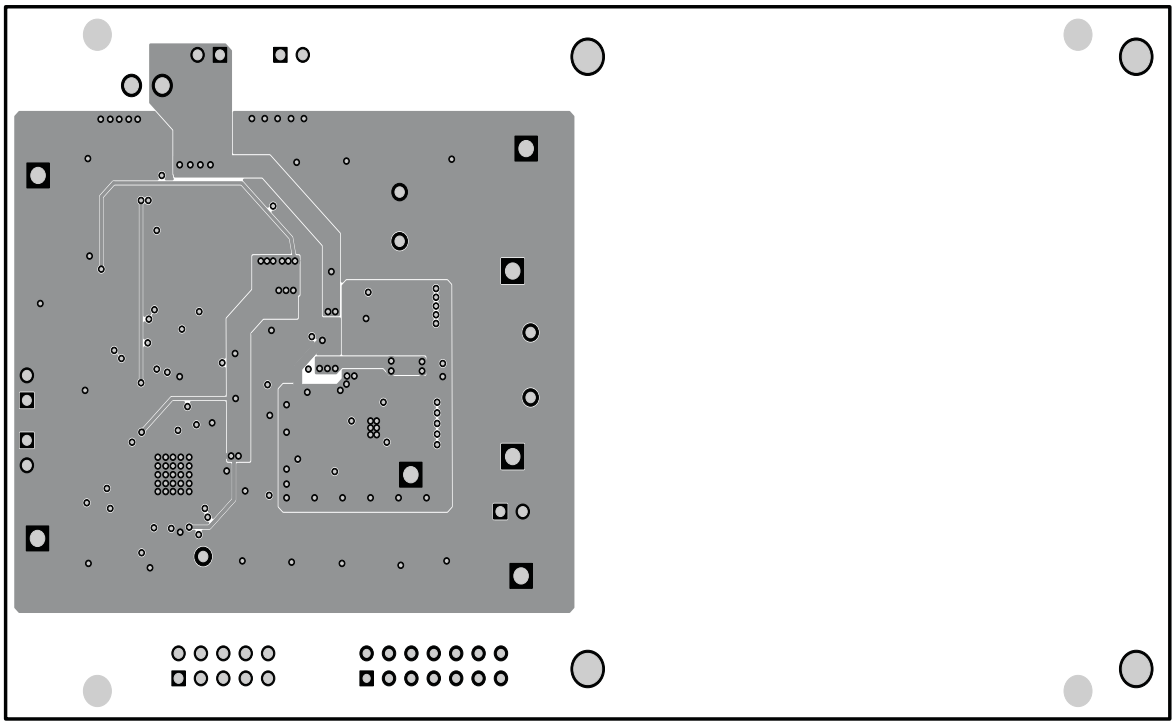

Figure 9. Layer 2

Copyright © 2011–2012, Texas Instruments Incorporated

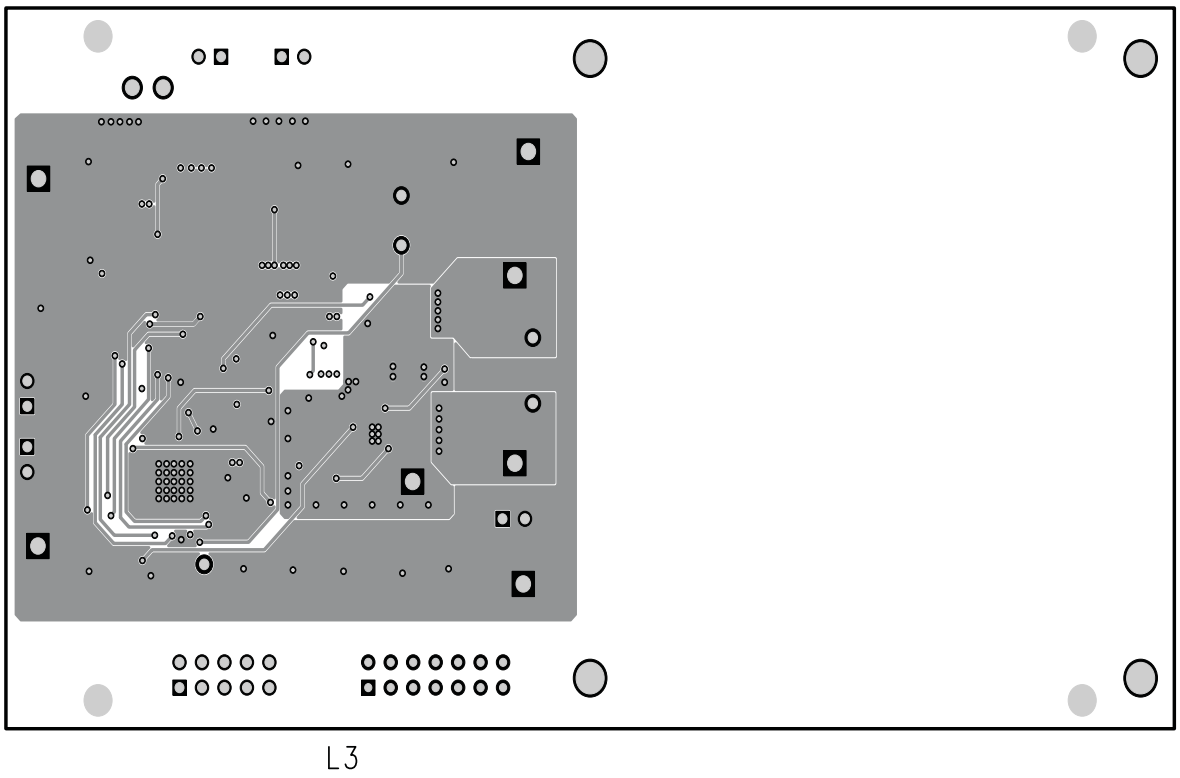

Figure 10. Layer 3

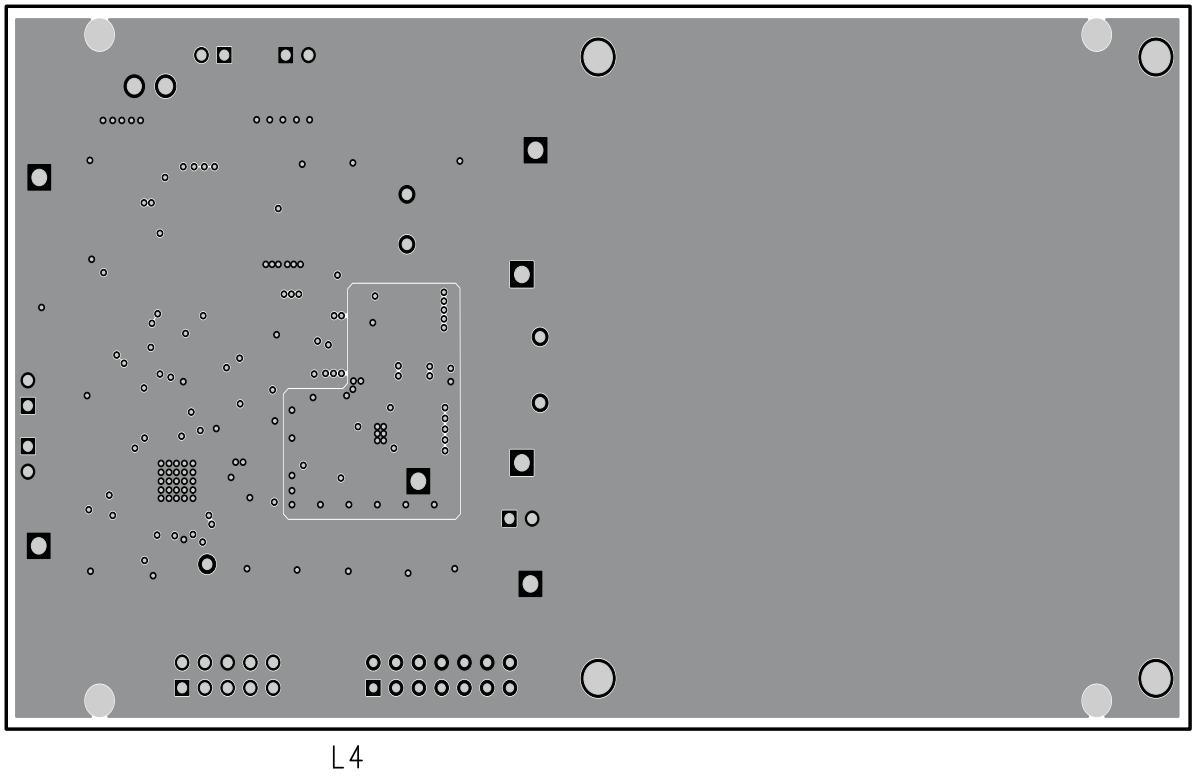

Figure 11. Bottom Layer

Copyright © 2011–2012, Texas Instruments Incorporated

8 Reference

For additional information about the bq500210EVM-689 low power wireless power evaluation kit from Texas Instruments, visit the product folder on the TI Web site at http://focus.ti.com/docs/toolsw/folders/print/bqtesla100lp.html.

Copyright © 2011–2012, Texas Instruments Incorporated

EVALUATION BOARD/KIT/MODULE (EVM) ADDITIONAL TERMS

Texas Instruments (TI) provides the enclosed Evaluation Board/Kit/Module (EVM) under the following conditions:

The user assumes all responsibility and liability for proper and safe handling of the goods. Further, the user indemnifies TI from all claims arising from the handling or use of the goods.

Should this evaluation board/kit not meet the specifications indicated in the User's Guide, the board/kit may be returned within 30 days from the date of delivery for a full refund. THE FOREGOING LIMITED WARRANTY IS THE EXCLUSIVE WARRANTY MADE BY SELLER TO BUYER AND IS IN LIEU OF ALL OTHER WARRANTIES, EXPRESSED, IMPLIED, OR STATUTORY, INCLUDING ANY WARRANTY OF MERCHANTABILITY OR FITNESS FOR ANY PARTICULAR PURPOSE. EXCEPT TO THE EXTENT OF THE INDEMNITY SET FORTH ABOVE, NEITHER PARTY SHALL BE LIABLE TO THE OTHER FOR ANY INDIRECT, SPECIAL, INCIDENTAL, OR CONSEQUENTIAL DAMAGES.

Please read the User's Guide and, specifically, the Warnings and Restrictions notice in the User's Guide prior to handling the product. This notice contains important safety information about temperatures and voltages. For additional information on TI's environmental and/or safety programs, please visit www.ti.com/esh or contact TI.

No license is granted under any patent right or other intellectual property right of TI covering or relating to any machine, process, or combination in which such TI products or services might be or are used. TI currently deals with a variety of customers for products, and therefore our arrangement with the user is not exclusive. TI assumes no liability for applications assistance, customer product design, software performance, or infringement of patents or services described herein.

REGULATORY COMPLIANCE INFORMATION

As noted in the EVM User's Guide and/or EVM itself, this EVM and/or accompanying hardware may or may not be subject to the Federal Communications Commission (FCC) and Industry Canada (IC) rules.

For EVMs **not** subject to the above rules, this evaluation board/kit/module is intended for use for ENGINEERING DEVELOPMENT, DEMONSTRATION OR EVALUATION PURPOSES ONLY and is not considered by TI to be a finished end product fit for general consumer use. It generates, uses, and can radiate radio frequency energy and has not been tested for compliance with the limits of computing devices pursuant to part 15 of FCC or ICES-003 rules, which are designed to provide reasonable protection against radio frequency interference. Operation of the equipment may cause interference with radio communications, in which case the user at his own expense will be required to take whatever measures may be required to correct this interference.

General Statement for EVMs including a radio

User Power/Frequency Use Obligations: This radio is intended for development/professional use only in legally allocated frequency and power limits. Any use of radio frequencies and/or power availability of this EVM and its development application(s) must comply with local laws governing radio spectrum allocation and power limits for this evaluation module. It is the user's sole responsibility to only operate this radio in legally acceptable frequency space and within legally mandated power limitations. Any exceptions to this are strictly prohibited and unauthorized by Texas Instruments unless user has obtained appropriate experimental/development licenses from local regulatory authorities, which is responsibility of user including its acceptable authorization.

For EVMs annotated as FCC – FEDERAL COMMUNICATIONS COMMISSION Part 15 Compliant

Caution

This device complies with part 15 of the FCC Rules. Operation is subject to the following two conditions: (1) This device may not cause harmful interference, and (2) this device must accept any interference received, including interference that may cause undesired operation.

Changes or modifications not expressly approved by the party responsible for compliance could void the user's authority to operate the equipment.

FCC Interference Statement for Class A EVM devices

This equipment has been tested and found to comply with the limits for a Class A digital device, pursuant to part 15 of the FCC Rules. These limits are designed to provide reasonable protection against harmful interference when the equipment is operated in a commercial environment. This equipment generates, uses, and can radiate radio frequency energy and, if not installed and used in accordance with the instruction manual, may cause harmful interference to radio communications. Operation of this equipment in a residential area is likely to cause harmful interference in which case the user will be required to correct the interference at his own expense.

FCC Interference Statement for Class B EVM devices

This equipment has been tested and found to comply with the limits for a Class B digital device, pursuant to part 15 of the FCC Rules. These limits are designed to provide reasonable protection against harmful interference in a residential installation. This equipment generates, uses and can radiate radio frequency energy and, if not installed and used in accordance with the instructions, may cause harmful interference to radio communications. However, there is no guarantee that interference will not occur in a particular installation. If this equipment does cause harmful interference to radio or television reception, which can be determined by turning the equipment off and on, the user is encouraged to try to correct the interference by one or more of the following measures:

- Reorient or relocate the receiving antenna.
- Increase the separation between the equipment and receiver.
- Connect the equipment into an outlet on a circuit different from that to which the receiver is connected.
- Consult the dealer or an experienced radio/TV technician for help.

For EVMs annotated as IC – INDUSTRY CANADA Compliant

This Class A or B digital apparatus complies with Canadian ICES-003.

Changes or modifications not expressly approved by the party responsible for compliance could void the user's authority to operate the equipment.

Concerning EVMs including radio transmitters

This device complies with Industry Canada licence-exempt RSS standard(s). Operation is subject to the following two conditions: (1) this device may not cause interference, and (2) this device must accept any interference, including interference that may cause undesired operation of the device.

Concerning EVMs including detachable antennas

Under Industry Canada regulations, this radio transmitter may only operate using an antenna of a type and maximum (or lesser) gain approved for the transmitter by Industry Canada. To reduce potential radio interference to other users, the antenna type and its gain should be so chosen that the equivalent isotropically radiated power (e.i.r.p.) is not more than that necessary for successful communication.

This radio transmitter has been approved by Industry Canada to operate with the antenna types listed in the user guide with the maximum permissible gain and required antenna impedance for each antenna type indicated. Antenna types not included in this list, having a gain greater than the maximum gain indicated for that type, are strictly prohibited for use with this device.

Cet appareil numérique de la classe A ou B est conforme à la norme NMB-003 du Canada.

Les changements ou les modifications pas expressément approuvés par la partie responsable de la conformité ont pu vider l'autorité de l'utilisateur pour actionner l'équipement.

Concernant les EVMs avec appareils radio

Le présent appareil est conforme aux CNR d'Industrie Canada applicables aux appareils radio exempts de licence. L'exploitation est autorisée aux deux conditions suivantes : (1) l'appareil ne doit pas produire de brouillage, et (2) l'utilisateur de l'appareil doit accepter tout brouillage radioélectrique subi, même si le brouillage est susceptible d'en compromettre le fonctionnement.

Concernant les EVMs avec antennes détachables

Conformément à la réglementation d'Industrie Canada, le présent émetteur radio peut fonctionner avec une antenne d'un type et d'un gain maximal (ou inférieur) approuvé pour l'émetteur par Industrie Canada. Dans le but de réduire les risques de brouillage radioélectrique à l'intention des autres utilisateurs, il faut choisir le type d'antenne et son gain de sorte que la puissance isotrope rayonnée équivalente (p.i.r.e.) ne dépasse pas l'intensité nécessaire à l'établissement d'une communication satisfaisante.

Le présent émetteur radio a été approuvé par Industrie Canada pour fonctionner avec les types d'antenne énumérés dans le manuel d'usage et ayant un gain admissible maximal et l'impédance requise pour chaque type d'antenne. Les types d'antenne non inclus dans cette liste, ou dont le gain est supérieur au gain maximal indiqué, sont strictement interdits pour l'exploitation de l'émetteur.

【Important Notice for Users of this Product in Japan】

This development kit is NOT certified as Confirming to Technical Regulations of Radio Law of Japan

If you use this product in Japan, you are required by Radio Law of Japan to follow the instructions below with respect to this product:

1. Use this product in a shielded room or any other test facility as defined in the notification #173 issued by Ministry of Internal Affairs and Communications on March 28, 2006, based on Sub-section 1.1 of Article 6 of the Ministry's Rule for Enforcement of Radio Law of Japan,
2. Use this product only after you obtained the license of Test Radio Station as provided in Radio Law of Japan with respect to this product, or
3. Use of this product only after you obtained the Technical Regulations Conformity Certification as provided in Radio Law of Japan with respect to this product. Also, please do not transfer this product, unless you give the same notice above to the transferee. Please note that if you could not follow the instructions above, you will be subject to penalties of Radio Law of Japan.

Texas Instruments Japan Limited
(address) 24-1, Nishi-Shinjuku 6 chome, Shinjuku-ku, Tokyo, Japan

http://www.tij.co.jp

【ご使用にあたっての注】

本開発キットは技術基準適合証明を受けておりません。

本製品のご使用に際しては、電波法遵守のため、以下のいずれかの措置を取っていただく必要がありますのでご注意ください。

1. 電波法施行規則第6条第1項第1号に基づく平成18年3月28日総務省告示第173号で定められた電波暗室等の試験設備でご使用いただく。
2. 実験局の免許を取得後ご使用いただく。
3. 技術基準適合証明を取得後ご使用いただく。

なお、本製品は、上記の「ご使用にあたっての注意」を譲渡先、移転先に通知しない限り、譲渡、移転できないものとします。

上記を遵守頂けない場合は、電波法の罰則が適用される可能性があることをご留意ください。

日本テキサス・インスツルメンツ株式会社
東京都新宿区西新宿６丁目２４番１号
西新宿三井ビル
http://www.tij.co.jp

EVALUATION BOARD/KIT/MODULE (EVM)
WARNINGS, RESTRICTIONS AND DISCLAIMERS

For Feasibility Evaluation Only, in Laboratory/Development Environments. Unless otherwise indicated, this EVM is not a finished electrical equipment and not intended for consumer use. It is intended solely for use for preliminary feasibility evaluation in laboratory/development environments by technically qualified electronics experts who are familiar with the dangers and application risks associated with handling electrical mechanical components, systems and subsystems. It should not be used as all or part of a finished end product.

Your Sole Responsibility and Risk. You acknowledge, represent and agree that:

1. You have unique knowledge concerning Federal, State and local regulatory requirements (including but not limited to Food and Drug Administration regulations, if applicable) which relate to your products and which relate to your use (and/or that of your employees, affiliates, contractors or designees) of the EVM for evaluation, testing and other purposes.
2. You have full and exclusive responsibility to assure the safety and compliance of your products with all such laws and other applicable regulatory requirements, and also to assure the safety of any activities to be conducted by you and/or your employees, affiliates, contractors or designees, using the EVM. Further, you are responsible to assure that any interfaces (electronic and/or mechanical) between the EVM and any human body are designed with suitable isolation and means to safely limit accessible leakage currents to minimize the risk of electrical shock hazard.
3. You will employ reasonable safeguards to ensure that your use of the EVM will not result in any property damage, injury or death, even if the EVM should fail to perform as described or expected.
4. You will take care of proper disposal and recycling of the EVM's electronic components and packing materials.

Certain Instructions. It is important to operate this EVM within TI's recommended specifications and environmental considerations per the user guidelines. Exceeding the specified EVM ratings (including but not limited to input and output voltage, current, power, and environmental ranges) may cause property damage, personal injury or death. If there are questions concerning these ratings please contact a TI field representative prior to connecting interface electronics including input power and intended loads. Any loads applied outside of the specified output range may result in unintended and/or inaccurate operation and/or possible permanent damage to the EVM and/or interface electronics. Please consult the EVM User's Guide prior to connecting any load to the EVM output. If there is uncertainty as to the load specification, please contact a TI field representative. During normal operation, some circuit components may have case temperatures greater than 60°C as long as the input and output are maintained at a normal ambient operating temperature. These components include but are not limited to linear regulators, switching transistors, pass transistors, and current sense resistors which can be identified using the EVM schematic located in the EVM User's Guide. When placing measurement probes near these devices during normal operation, please be aware that these devices may be very warm to the touch. As with all electronic evaluation tools, only qualified personnel knowledgeable in electronic measurement and diagnostics normally found in development environments should use these EVMs.

Agreement to Defend, Indemnify and Hold Harmless. You agree to defend, indemnify and hold TI, its licensors and their representatives harmless from and against any and all claims, damages, losses, expenses, costs and liabilities (collectively, "Claims") arising out of or in connection with any use of the EVM that is not in accordance with the terms of the agreement. This obligation shall apply whether Claims arise under law of tort or contract or any other legal theory, and even if the EVM fails to perform as described or expected.

Safety-Critical or Life-Critical Applications. If you intend to evaluate the components for possible use in safety critical applications (such as life support) where a failure of the TI product would reasonably be expected to cause severe personal injury or death, such as devices which are classified as FDA Class III or similar classification, then you must specifically notify TI of such intent and enter into a separate Assurance and Indemnity Agreement.

Mailing Address: Texas Instruments, Post Office Box 655303, Dallas, Texas 75265
Copyright © 2012, Texas Instruments Incorporated

IMPORTANT NOTICE

Texas Instruments Incorporated and its subsidiaries (TI) reserve the right to make corrections, enhancements, improvements and other changes to its semiconductor products and services per JESD46, latest issue, and to discontinue any product or service per JESD48, latest issue. Buyers should obtain the latest relevant information before placing orders and should verify that such information is current and complete. All semiconductor products (also referred to herein as “components”) are sold subject to TI’s terms and conditions of sale supplied at the time of order acknowledgment.

TI warrants performance of its components to the specifications applicable at the time of sale, in accordance with the warranty in TI’s terms and conditions of sale of semiconductor products. Testing and other quality control techniques are used to the extent TI deems necessary to support this warranty. Except where mandated by applicable law, testing of all parameters of each component is not necessarily performed.

TI assumes no liability for applications assistance or the design of Buyers’ products. Buyers are responsible for their products and applications using TI components. To minimize the risks associated with Buyers’ products and applications, Buyers should provide adequate design and operating safeguards.

TI does not warrant or represent that any license, either express or implied, is granted under any patent right, copyright, mask work right, or other intellectual property right relating to any combination, machine, or process in which TI components or services are used. Information published by TI regarding third-party products or services does not constitute a license to use such products or services or a warranty or endorsement thereof. Use of such information may require a license from a third party under the patents or other intellectual property of the third party, or a license from TI under the patents or other intellectual property of TI.

Reproduction of significant portions of TI information in TI data books or data sheets is permissible only if reproduction is without alteration and is accompanied by all associated warranties, conditions, limitations, and notices. TI is not responsible or liable for such altered documentation. Information of third parties may be subject to additional restrictions.

Resale of TI components or services with statements different from or beyond the parameters stated by TI for that component or service voids all express and any implied warranties for the associated TI component or service and is an unfair and deceptive business practice. TI is not responsible or liable for any such statements.

Buyer acknowledges and agrees that it is solely responsible for compliance with all legal, regulatory and safety-related requirements concerning its products, and any use of TI components in its applications, notwithstanding any applications-related information or support that may be provided by TI. Buyer represents and agrees that it has all the necessary expertise to create and implement safeguards which anticipate dangerous consequences of failures, monitor failures and their consequences, lessen the likelihood of failures that might cause harm and take appropriate remedial actions. Buyer will fully indemnify TI and its representatives against any damages arising out of the use of any TI components in safety-critical applications.

In some cases, TI components may be promoted specifically to facilitate safety-related applications. With such components, TI’s goal is to help enable customers to design and create their own end-product solutions that meet applicable functional safety standards and requirements. Nonetheless, such components are subject to these terms.

No TI components are authorized for use in FDA Class III (or similar life-critical medical equipment) unless authorized officers of the parties have executed a special agreement specifically governing such use.

Only those TI components which TI has specifically designated as military grade or “enhanced plastic” are designed and intended for use in military/aerospace applications or environments. Buyer acknowledges and agrees that any military or aerospace use of TI components which have ***not*** been so designated is solely at the Buyer's risk, and that Buyer is solely responsible for compliance with all legal and regulatory requirements in connection with such use.

TI has specifically designated certain components which meet ISO/TS16949 requirements, mainly for automotive use. Components which have not been so designated are neither designed nor intended for automotive use; and TI will not be responsible for any failure of such components to meet such requirements.

Products		**Applications**	
Audio	www.ti.com/audio	Automotive and Transportation	www.ti.com/automotive
Amplifiers	amplifier.ti.com	Communications and Telecom	www.ti.com/communications
Data Converters	dataconverter.ti.com	Computers and Peripherals	www.ti.com/computers
DLP® Products	www.dlp.com	Consumer Electronics	www.ti.com/consumer-apps
DSP	dsp.ti.com	Energy and Lighting	www.ti.com/energy
Clocks and Timers	www.ti.com/clocks	Industrial	www.ti.com/industrial
Interface	interface.ti.com	Medical	www.ti.com/medical
Logic	logic.ti.com	Security	www.ti.com/security
Power Mgmt	power.ti.com	Space, Avionics and Defense	www.ti.com/space-avionics-defense
Microcontrollers	microcontroller.ti.com	Video and Imaging	www.ti.com/video
RFID	www.ti-rfid.com		
OMAP Applications Processors	www.ti.com/omap	**TI E2E Community**	e2e.ti.com
Wireless Connectivity	www.ti.com/wirelessconnectivity		

Mailing Address: Texas Instruments, Post Office Box 655303, Dallas, Texas 75265
Copyright © 2012, Texas Instruments Incorporated