bq4015/Y

512Kx8 Nonvolatile SRAM

Features

- Data retention for at least 10 years without power
- Automatic write-protection during power-up/power-down cycles
- Conventional SRAM operation, including unlimited write cycles
- Internal isolation of battery before power application
- Industry standard 32-pin DIP pinout
- 34-pin LIFETIME LITHIUM™ module
  - Module completely surface-mounted
  - Snap-on power-source for lithium battery backup
  - Replaceable power-source (part number: bq40MS)

General Description

The CMOS bq4015/Y is a nonvolatile 4,194,304-bit static RAM organized as 524,288 words by 8 bits. The integral control circuitry and lithium energy source provide reliable nonvolatility coupled with the unlimited write cycles of standard SRAM.

The control circuitry constantly monitors the single 5V supply for an out-of-tolerance condition. When V_{CC} falls out of tolerance, the SRAM is unconditionally write-protected to prevent an inadvertent write operation.

At this time the integral energy source is switched on to sustain the memory until after V_{CC} returns valid.

The bq4015/Y uses extremely low standby current CMOS SRAMs, coupled with small lithium coin cells to provide nonvolatility without long write-cycle times and the write-cycle limitations associated with EEPROM.

The bq4015/Y requires no external circuitry and is compatible with the industry-standard 4Mb SRAM pinout.

Pin Connections

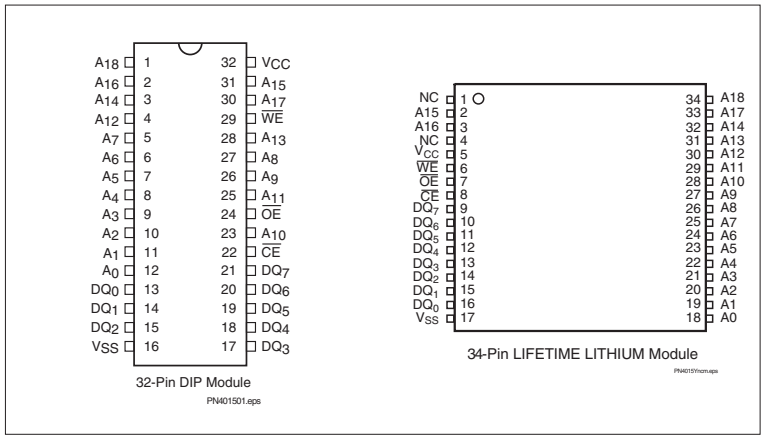

Pin Names

A0–A18	Address inputs
DQ0–DQ7	Data input/output
$\overline{CE}$	Chip enable input
$\overline{OE}$	Output enable input
$\overline{WE}$	Write enable input
NC	No connect
V_{CC}	Supply voltage input
V_{SS}	Ground

Selection Guide

Part Number	Maximum Access Time (ns)	Negative Supply Tolerance	Part Number	Maximum Access Time (ns)	Negative Supply Tolerance
bq4015x -70	70	-5%	bq4015Yx -70	70	-10%
bq4015x -85	85	-5%	bq4015Yx -85	85	-10%

Note: x = MA for PDIP or MS for LIFETIME LITHIUM module.

5/99 E

Functional Description

When power is valid, the bq4015/Y operates as a standard CMOS SRAM. During power-down and power-up cycles, the bq4015/Y acts as a nonvolatile memory, automatically protecting and preserving the memory contents.

Power-down/power-up control circuitry constantly monitors the V_{CC} supply for a power-fail-detect threshold V_{PFD}. The bq4015 monitors for V_{PFD} = 4.62V typical for use in systems with 5% supply tolerance. The bq4015Y monitors for V_{PFD} = 4.37V typical for use in systems with 10% supply tolerance.

When V_{CC} falls below the V_{PFD} threshold, the SRAM automatically write-protects the data. All outputs become high impedance, and all inputs are treated as "don't care." If a valid access is in process at the time of power-fail detection, the memory cycle continues to completion. If the memory cycle fails to terminate within time t_{WPT}, write-protection takes place.

As V_{CC} falls past V_{PFD} and approaches 3V, the control circuitry switches to the internal lithium backup supply, which provides data retention until valid V_{CC} is applied.

When V_{CC} returns to a level above the internal backup cell voltage, the supply is switched back to V_{CC}. After V_{CC} ramps above the V_{PFD} threshold, write-protection continues for a time t_{CER} (120ms maximum) to allow for processor stabilization. Normal memory operation may resume after this time.

The internal coin cells used by the bq4015/Y have an extremely long shelf life and provide data retention for more than 10 years in the absence of system power.

As shipped from Unitrode, the integral lithium cells of the MT-type module are electrically isolated from the memory. (Self-discharge in this condition is approximately 0.5% per year.) Following the first application of V_{CC}, this isolation is broken, and the lithium backup provides data retention on subsequent power-downs. The LIFETIME LITHIUM package option is shipped as two parts.

Block Diagram

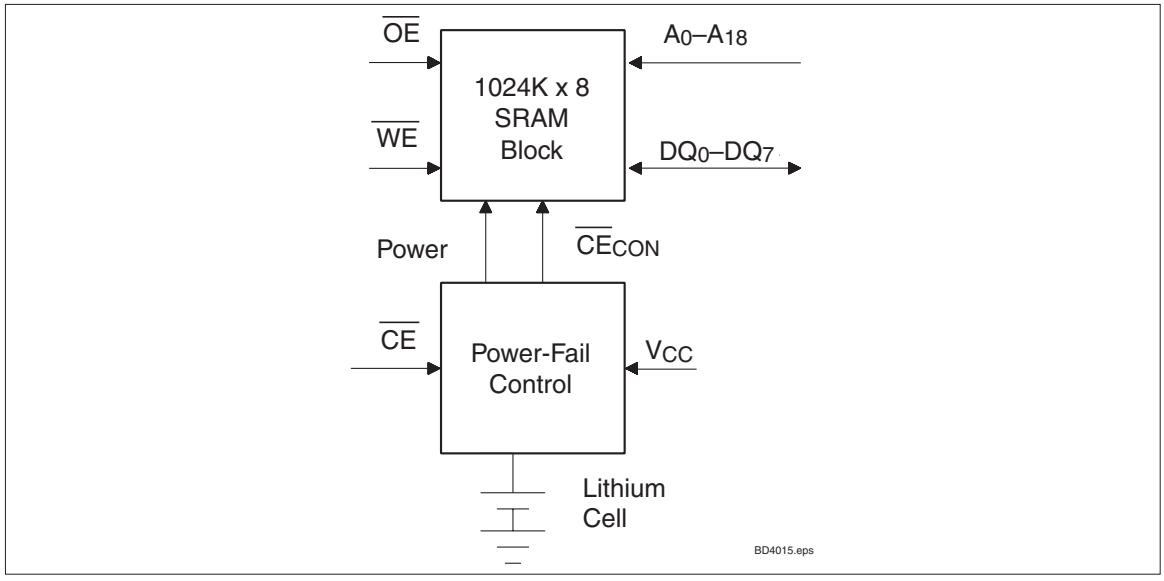

Truth Table

Mode	$\overline{CE}$	$\overline{WE}$	$\overline{OE}$	I/O Operation	Power
Not selected	H	X	X	High Z	Standby
Output disable	L	H	H	High Z	Active
Read	L	H	L	D_{OUT}	Active
Write	L	L	X	D_{IN}	Active

Absolute Maximum Ratings

Symbol	Parameter	Value	Unit	Conditions
V_{CC}	DC voltage applied on V_{CC} relative to V_{SS}	-0.3 to 7.0	V	
V_T	DC voltage applied on any pin excluding V_{CC} relative to V_{SS}	-0.3 to 7.0	V	$V_T \le V_{CC} + 0.3$
T_{OPR}	Operating temperature	0 to +70	°C	Commercial
		-40 to +85	°C	Industrial “N”
T_{STG}	Storage temperature	-40 to +70	°C	Commercial
		-40 to +85	°C	Industrial “N”
T_{BIAS}	Temperature under bias	-10 to +70	°C	Commercial
		-40 to +85	°C	Industrial “N”
T_{SOLDER}	Soldering temperature	+260	°C	For 10 seconds

Note: Permanent device damage may occur if **Absolute Maximum Ratings** are exceeded. Functional operation should be limited to the Recommended DC Operating Conditions detailed in this data sheet. Exposure to conditions beyond the operational limits for extended periods of time may affect device reliability.

Recommended DC Operating Conditions ($T_A = T_{OPR}$)

Symbol	Parameter	Minimum	Typical	Maximum	Unit	Notes
V_{CC}	Supply voltage	4.5	5.0	5.5	V	bq4015Y
		4.75	5.0	5.5	V	bq4015
V_{SS}	Supply voltage	0	0	0	V	
V_{IL}	Input low voltage	-0.3	-	0.8	V	
V_{IH}	Input high voltage	2.2	-	V_{CC} + 0.3	V	

Note: Typical values indicate operation at T_A = 25°C.

DC Electrical Characteristics ($T_A = T_{OPR}$, $V_{CCmin} \leq V_{CC} \leq V_{CCmax}$)

Symbol	Parameter	Minimum	Typical	Maximum	Unit	Conditions/Notes
I_{LI}	Input leakage current	-	-	± 1	µA	$V_{IN} = V_{SS}$ to V_{CC}
I_{LO}	Output leakage current	-	-	± 1	µA	$\overline{CE} = V_{IH}$ or $\overline{OE} = V_{IH}$ or $\overline{WE} = V_{IL}$
V_{OH}	Output high voltage	2.4	-	-	V	I_{OH} = -1.0 mA
V_{OL}	Output low voltage	-	-	0.4	V	I_{OL} = 2.1 mA
I_{SB1}	Standby supply current	-	3	5	mA	$\overline{CE} = V_{IH}$
I_{SB2}	Standby supply current	-	0.1	1	mA	$\overline{CE} \geq V_{CC}$ - 0.2V, $0V \leq V_{IN} \leq 0.2V$, or $V_{IN} \geq V_{CC}$ - 0.2
I_{CC}	Operating supply current	-	-	90	mA	Min. cycle, duty = 100%, $\overline{CE} = V_{IL}$, $I_{I/O}$ = 0mA, A17 < V_{IL} or A17 > V_{IH}, A18 < V_{IL} or A18 > V_{IH}
V_{PFD}	Power-fail-detect voltage	4.55	4.62	4.75	V	bq4015
		4.30	4.37	4.50	V	bq4015Y
V_{SO}	Supply switch-over voltage	-	3	-	V	

Note: Typical values indicate operation at T_A = 25°C, V_{CC} = 5V.

Capacitance (T_A = 25°C, F = 1MHz, V_{CC} = 5.0V)

Symbol	Parameter	Minimum	Typical	Maximum	Unit	Conditions
$C_{I/O}$	Input/output capacitance	-	-	8	pF	Output voltage = 0V
C_{IN}	Input capacitance	-	-	10	pF	Input voltage = 0V

Note: These parameters are sampled and not 100% tested.

AC Test Conditions

Parameter	Test Conditions
Input pulse levels	0V to 3.0V
Input rise and fall times	5 ns
Input and output timing reference levels	1.5 V (unless otherwise specified)
Output load (including scope and jig)	See Figures 1 and 2

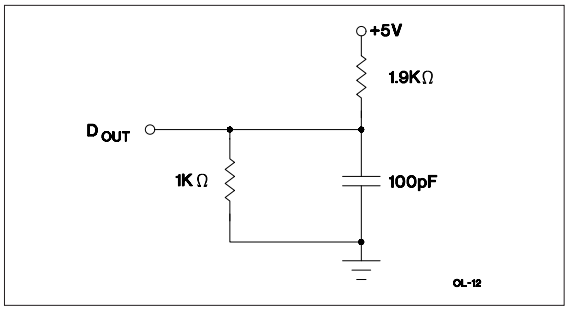

Figure 1. Output Load A

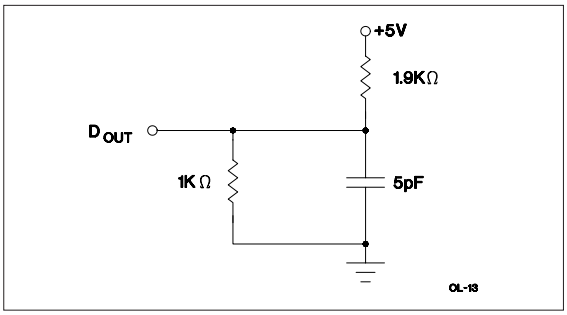

Figure 2. Output Load B

Read Cycle ($T_A = T_{OPR}$, $V_{CCmin} \leq V_{CC} \leq V_{CCmax}$)

Symbol	Parameter	-70		-85/-85N		-120/-120N		Unit	Conditions
		Min.	Max.	Min.	Max.	Min.	Max.		
t_{RC}	Read cycle time	70	-	85	-	120	-	ns	
t_{AA}	Address access time	-	70	-	85	-	120	ns	Output load A
t_{ACE}	Chip enable access time	-	70	-	85	-	120	ns	Output load A
t_{OE}	Output enable to output valid	-	35	-	45	-	60	ns	Output load A
t_{CLZ}	Chip enable to output in low Z	5	-	5	-	5	-	ns	Output load B
t_{OLZ}	Output enable to output in low Z	5	-	0	-	0	-	ns	Output load B
t_{CHZ}	Chip disable to output in high Z	0	25	0	35	0	45	ns	Output load B
t_{OHZ}	Output disable to output in high Z	0	25	0	25	0	35	ns	Output load B
t_{OH}	Output hold from address change	10	-	10	-	10	-	ns	Output load A

Read Cycle No. 1 (Address Access) [1, 2]

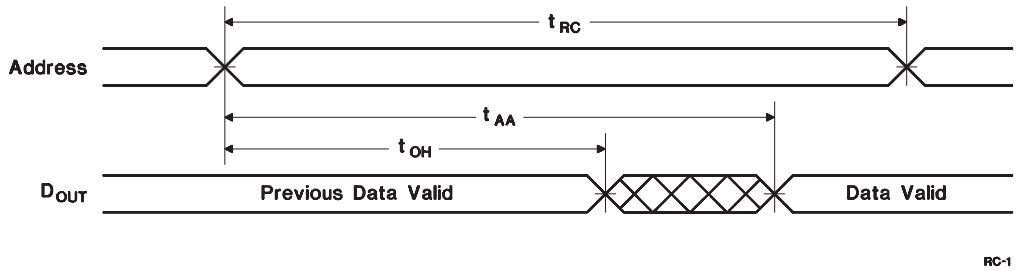

Read Cycle No. 2 (CE Access) [1, 2, 3]

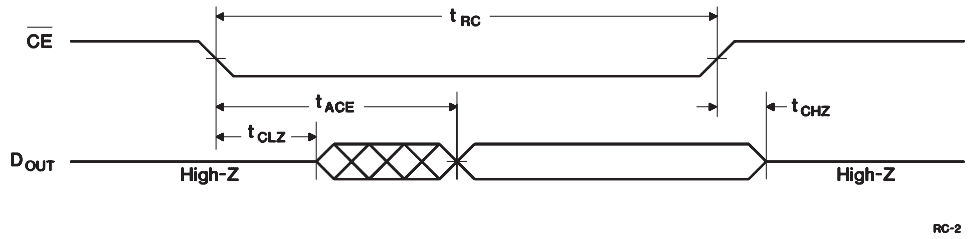

Read Cycle No. 3 (OE Access) [1,5]

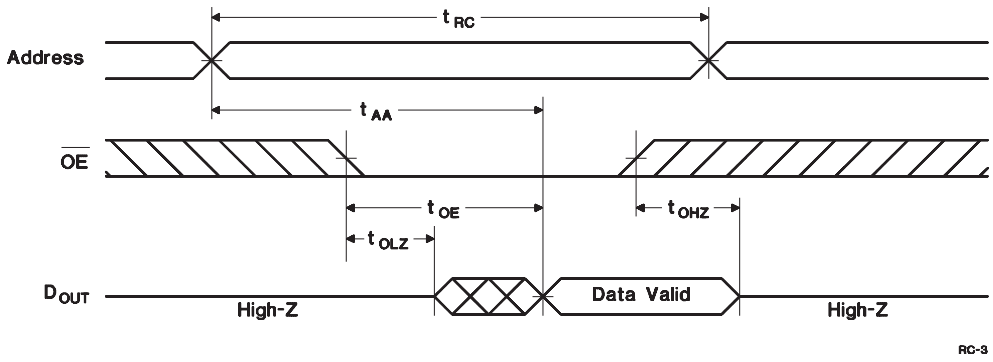

Notes:

1. $\overline{WE}$ is held high for a read cycle.
2. Device is continuously selected: $\overline{CE}$ = $\overline{OE}$ = V_{IL}.
3. Address is valid prior to or coincident with $\overline{CE}$ transition low.
4. $\overline{OE}$ = V_{IL}.
5. Device is continuously selected: $\overline{CE}$ = V_{IL}.

Write Cycle ($T_A = T_{OPR}$, $V_{CCmin} \le V_{CC} \le V_{CCmax}$)

Symbol	Parameter	-70		-85/-85N		-120/-120N		Units	Conditions/Notes
		Min.	Max.	Min.	Max.	Min.	Max.		
t_{WC}	Write cycle time	70	-	85	-	120	-	ns	
t_{CW}	Chip enable to end of write	65	-	75	-	100	-	ns	(1)
t_{AW}	Address valid to end of write	65	-	75	-	100	-	ns	(1)
t_{AS}	Address setup time	0	-	0	-	0	-	ns	Measured from address valid to beginning of write. (2)
t_{WP}	Write pulse width	55	-	65	-	85	-	ns	Measured from beginning of write to end of write. (1)
t_{WR1}	Write recovery time (write cycle 1)	5	-	5	-	5	-	ns	Measured from $\overline{WE}$ going high to end of write cycle. (3)
t_{WR2}	Write recovery time (write cycle 2)	15	-	15	-	15	-	ns	Measured from $\overline{CE}$ going high to end of write cycle. (3)
t_{DW}	Data valid to end of write	30	-	35	-	45	-	ns	Measured to first low-to-high transition of either $\overline{CE}$ or $\overline{WE}$.
t_{DH1}	Data hold time (write cycle 1)	0	-	0	-	0	-	ns	Measured from $\overline{WE}$ going high to end of write cycle. (4)
t_{DH2}	Data hold time (write cycle 2)	10	-	10	-	10	-	ns	Measured from $\overline{CE}$ going high to end of write cycle. (4)
t_{WZ}	Write enabled to output in high Z	0	25	0	30	0	40	ns	I/O pins are in output state. (5)
t_{OW}	Output active from end of write	5	-	0	-	0	-	ns	I/O pins are in output state. (5)

Notes:

1. A write ends at the earlier transition of $\overline{CE}$ going high and $\overline{WE}$ going high.
2. A write occurs during the overlap of a low $\overline{CE}$ and a low $\overline{WE}$. A write begins at the later transition of $\overline{CE}$ going low and $\overline{WE}$ going low.
3. Either t_{WR1} or t_{WR2} must be met.
4. Either t_{DH1} or t_{DH2} must be met.
5. If $\overline{CE}$ goes low simultaneously with $\overline{WE}$ going low or after $\overline{WE}$ going low, the outputs remain in high-impedance state.

Write Cycle No. 1 (WE-Controlled) [1,2,3]

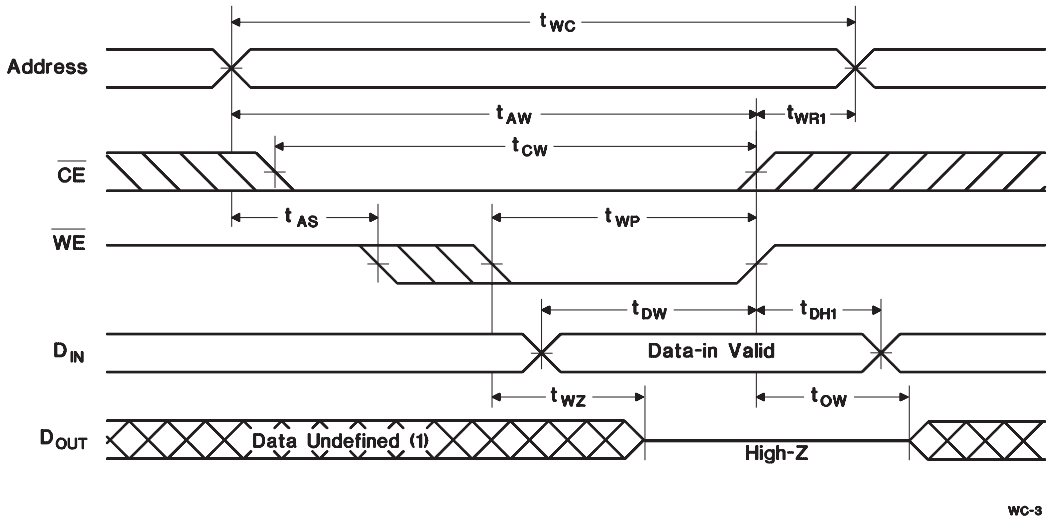

Write Cycle No. 2 (CE-Controlled) [1,2,3,4,5]

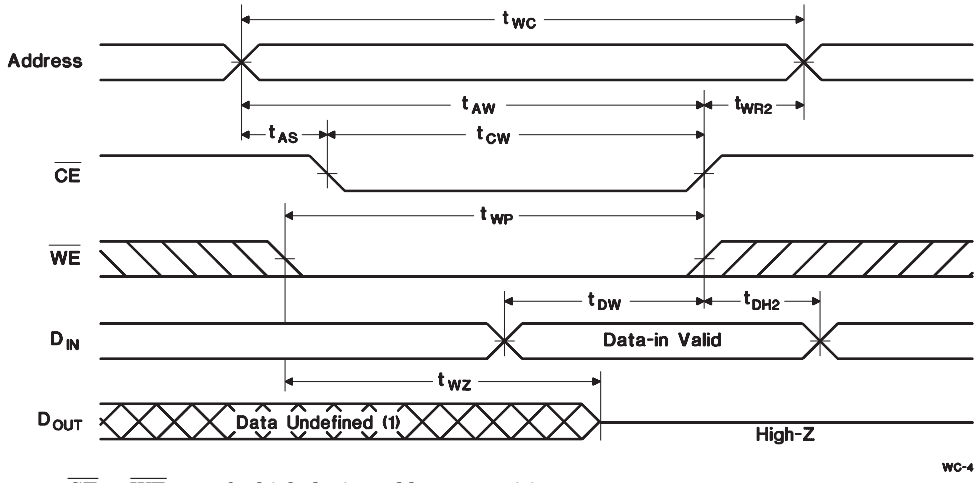

Notes:

1. $\overline{CE}$ or $\overline{WE}$ must be high during address transition.
2. Because I/O may be active ($\overline{OE}$ low) during this period, data input signals of opposite polarity to the outputs must not be applied.
3. If $\overline{OE}$ is high, the I/O pins remain in a state of high impedance.
4. Either t_{WR1} or t_{WR2} must be met.
5. Either t_{DH1} or t_{DH2} must be met.

Power-Down/Power-Up Cycle ($T_A = T_{OPR}$)

Symbol	Parameter	Minimum	Typical	Maximum	Unit	Conditions
t_{PF}	V_{CC} slew, 4.75 to 4.25 V	300	-	-	µs	
t_{FS}	V_{CC} slew, 4.25 to V_{SO}	10	-	-	µs	
t_{PU}	V_{CC} slew, V_{SO} to V_{PFD} (max.)	0	-	-	µs	
t_{CER}	Chip enable recovery time	40	80	120	ms	Time during which SRAM is write-protected after V_{CC} passes V_{PFD} on power-up.
t_{DR}	Data-retention time in absence of V_{CC}	10	-	-	years	T_A = 25°C. (2)
t_{WPT}	Write-protect time	40	100	150	µs	Delay after V_{CC} slews down past V_{PFD} before SRAM is write-protected.

Notes: 1. Typical values indicate operation at T_A = 25°C, V_{CC} = 5V.

2. Batteries are disconnected from circuit until after V_{CC} is applied for the first time. t_{DR} is the accumulated time in absence of power beginning when power is first applied to the device.

Caution: Negative undershoots below the absolute maximum rating of -0.3V in battery-backup mode may affect data integrity.

Power-Down/Power-Up Timing

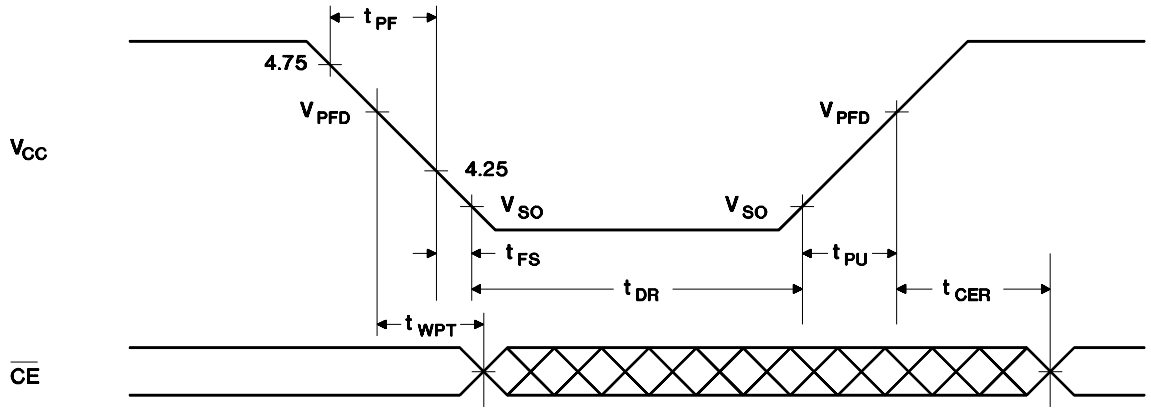

PD-B

MA: 32-Pin A-Type Module

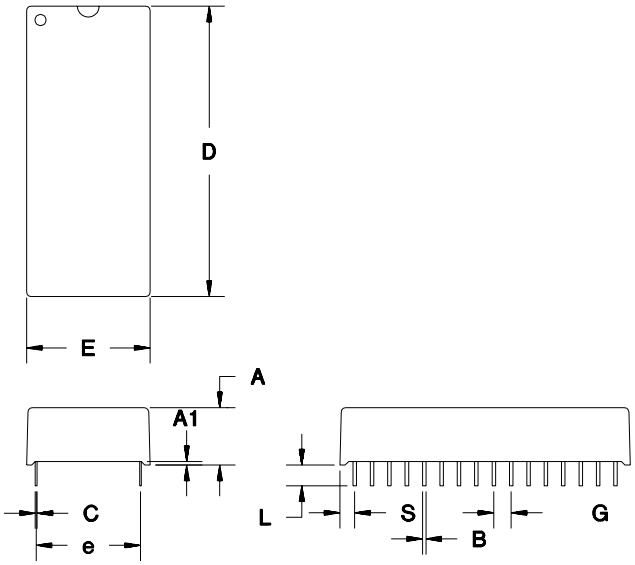

32-Pin MA (A-Type Module)

Dimension	Minimum	Maximum
A	0.365	0.375
A1	0.015	-
B	0.017	0.023
C	0.008	0.013
D	1.670	1.700
E	0.710	0.740
e	0.590	0.630
G	0.090	0.110
L	0.120	0.150
S	0.075	0.110

All dimensions are in inches.

MS: 34-Pin Leaded Chip carrier for LIFETIME LITHIUM Module

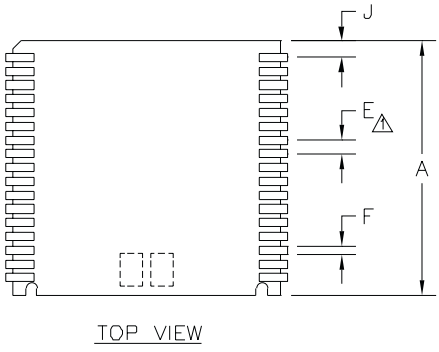

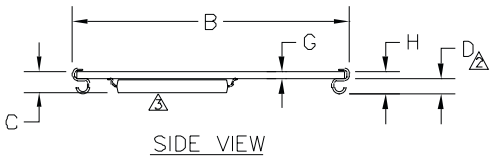

34-Pin LCR LIFETIME LITHIUM Module

Dimension	Minimum	Maximum
A	0.920	0.930
B	0.980	0.995
C	-	0.080
D	0.052	0.060
E	0.045	0.055
F	0.015	0.025
G	0.020	0.030
H	-	0.090
J	0.053	0.073

All dimensions are in inches.

1 Centerline of lead within ±0.005 of true position.

2 Leads coplanar within ±0.004 at seating plane.

3 Components and location may vary.

MS: LIFETIME LITHIUM Module Housing

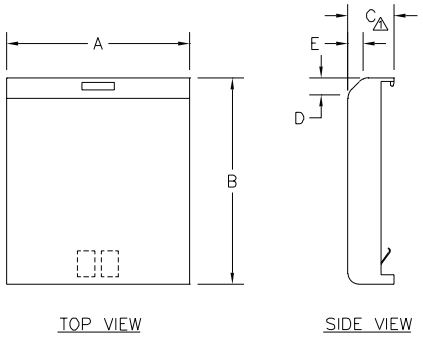

LIFETIME LITHIUM Module Housing

Dimension	Minimum	Maximum
A	0.845	0.855
B	0.955	0.965
C	0.210	0.220
D	0.065	0.075
E	0.065	0.075

All dimensions are in inches.

1 Edges coplanar within ±0.025.

MS: LIFETIME LITHIUM Module with LCR attached

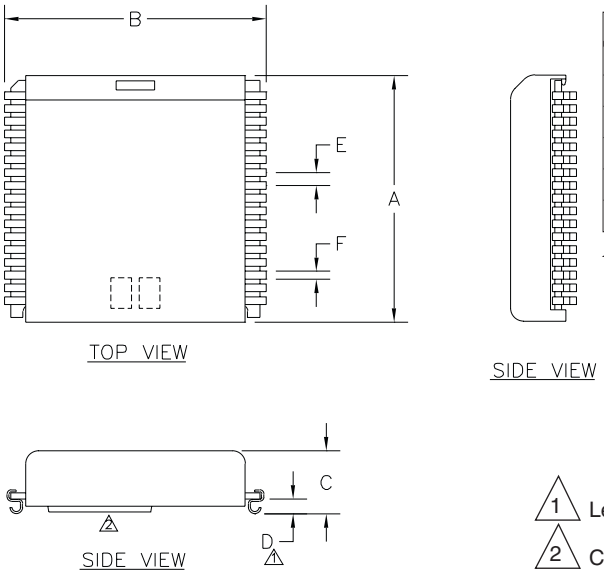

LIFETIME LITHIUM Module

Dimension	Minimum	Maximum
A	0.955	0.965
B	0.980	0.995
C	0.240	0.250
D	0.052	0.060
E	0.045	0.055
F	0.015	0.025

All dimensions are in inches.

1 Leads coplanar within ±0.004 at seating plane.

2 Components and location may vary.

Data Sheet Revision History

Change No.	Page No.	Description	Nature of Change
1	3	I_{CC} test conditions	Clarification
2	1, 2, 3, 4, 7, 8, 10	bq4015MA part	Addition
3	2, 10	Added industrial temperature range	Addition
4	1, 3, 10	Removed MB package selection	Deletion
5	1, 10	Added MS package	Addition

Notes: Change 1 = Sept. 1992 B changes from Sept. 1990 A.
Change 2 = Nov. 1993 C changes from Sept. 1992 B.
Change 3 = June 1995 C changes from Nov. 1993 C.
Change 4 = Nov. 1997 D changes from June 1995 C.
Change 5 = May 1999 E changes from Nov. 1997 D.

Ordering Information

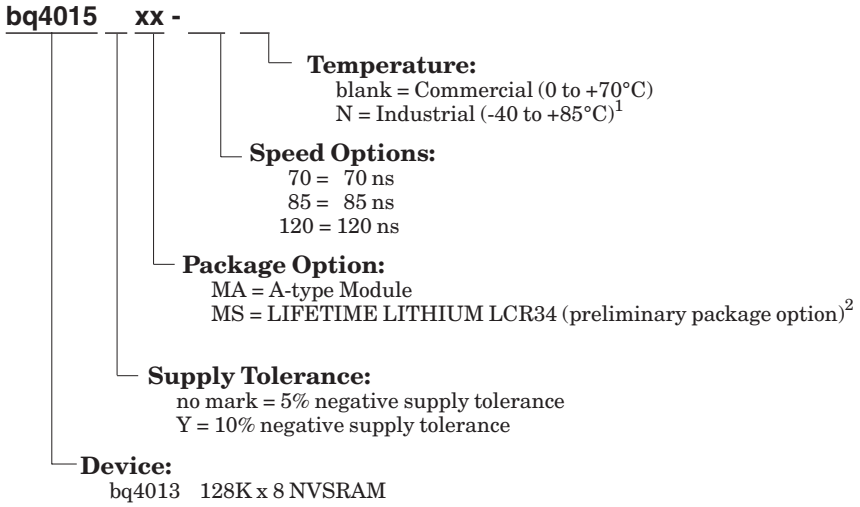

Notes:
1. Only 10% supply ("Y-MA") version is available in industrial temperature range; contact factory for speed grade availability.
2. The LIFETIME LITHIUM module is ordered seperately under part number bq40MS.

IMPORTANT NOTICE

Texas Instruments and its subsidiaries (TI) reserve the right to make changes to their products or to discontinue any product or service without notice, and advise customers to obtain the latest version of relevant information to verify, before placing orders, that information being relied on is current and complete. All products are sold subject to the terms and conditions of sale supplied at the time of order acknowledgement, including those pertaining to warranty, patent infringement, and limitation of liability.

TI warrants performance of its semiconductor products to the specifications applicable at the time of sale in accordance with TI's standard warranty. Testing and other quality control techniques are utilized to the extent TI deems necessary to support this warranty. Specific testing of all parameters of each device is not necessarily performed, except those mandated by government requirements.

CERTAIN APPLICATIONS USING SEMICONDUCTOR PRODUCTS MAY INVOLVE POTENTIAL RISKS OF DEATH, PERSONAL INJURY, OR SEVERE PROPERTY OR ENVIRONMENTAL DAMAGE ("CRITICAL APPLICATIONS"). TI SEMICONDUCTOR PRODUCTS ARE NOT DESIGNED, AUTHORIZED, OR WARRANTED TO BE SUITABLE FOR USE IN LIFE-SUPPORT DEVICES OR SYSTEMS OR OTHER CRITICAL APPLICATIONS. INCLUSION OF TI PRODUCTS IN SUCH APPLICATIONS IS UNDERSTOOD TO BE FULLY AT THE CUSTOMER'S RISK.

In order to minimize risks associated with the customer's applications, adequate design and operating safeguards must be provided by the customer to minimize inherent or procedural hazards.

TI assumes no liability for applications assistance or customer product design. TI does not warrant or represent that any license, either express or implied, is granted under any patent right, copyright, mask work right, or other intellectual property right of TI covering or relating to any combination, machine, or process in which such semiconductor products or services might be or are used. TI's publication of information regarding any third party's products or services does not constitute TI's approval, warranty or endorsement thereof.

Copyright © 1999, Texas Instruments Incorporated