bq33100 Super Capacitor Pack Manager EVM

NOTE: BEFORE YOU START: Download the latest revision of the device firmware and the evaluation software from the TI bq33100 product page at www.ti.com. Go to the *Tools and Software* section. For step-by-step instructions on reprogramming the device firmware, refer to the application report SLUA336B.

This evaluation module (EVM) is a complete evaluation system for the bq33100 super capacitor manager. The EVM includes one bq33100 circuit module. An EV2300 PC interface board for gas gauge interface and a PC USB cable are required for communication with a PC and can be ordered online. Windows™-based PC software is available online as well. The circuit module includes one bq33100 integrated circuit (IC), charging circuitry, and all other onboard components necessary to monitor and predict state of health, perform charging, perform cell balancing, monitor critical parameters, and protect the super capacitors from overvoltage, short-circuit, and overtemperature in 2-, 3-, 4-, or 5-series super capacitor stacks. The circuit module connects directly across the super capacitor stack. With the EV2300 interface board and software, the user can read the bq33100 data registers, program the chipset for different stack configurations, log cycling data for further evaluation, and evaluate the overall functionality of the bq33100 under different conditions.

Contents

1 Features 2
2 bq33100-Based Circuit Module 2
3 bq33100 Circuit Module Schematic 3
4 Circuit Module Physical Layouts and Bill of Materials 3
5 EVM Hardware and Software Setup 12
6 Troubleshooting Unexpected Dialog Boxes 12
7 Hardware Connection 12
8 Operation 13
9 Calibration Screen 16
10 Pro (Advanced) Screen 17
11 Stack Assembly and the bq33100 19

List of Figures

1 bq33100EVM-001 Layout (Silk Screen) 4
2 Top Assembly 4
3 Top Layer 5
4 Internal Layer 1 5
5 Internal Layer 2 6
6 Bottom Layer 6
7 Bottom Assembly 7
8 Schematic 11
9 bq33100 Circuit Module Connection to Cells, System Load, and System Power 13
10 SBS Data Screen 14
11 Data Flash Screen, Safety Class 15
12 Calibration Screen 17

Windows is a trademark of Microsoft.
All other trademarks are the property of their respective owners.

© 2011, Texas Instruments Incorporated

13 Pro (Advanced) Screen 18
14 Connection Sequence 19

List of Tables

1 Ordering Information 2
2 Common Charging Voltage Configurations for 2-, 3-, 4-, and 5- Cell Monitors 3
3 Bill of Materials 8
4 Performance Specification Summary 12
5 Circuit Module to EV2300 Connections 13

1 Features

- Complete evaluation system for the bq33100 SBS 1.1-compliant super capacitor management IC
- Populated circuit module for quick setup
- PC software and interface board for easy evaluation
- Software that allows data logging for system analysis

1.1 Kit Contents

- bq33100 circuit module
- Set of support documentation

1.2 Ordering Information

Table 1. Ordering Information

EVM PART NUMBER	CHEMISTRY	CONFIGURATION	CAPACITY
bq33100EVM-001	Super Capacitor	2, 3, 4, or 5 cell	Any

2 bq33100-Based Circuit Module

The bq33100-based circuit module is a complete and compact example solution of a bq33100 circuit for super capacitor management and protection. The circuit module incorporates a bq33100 battery monitor IC, charging circuitry and all other components necessary to accurately predict the capacity of 2-, 3-, 4-, or 5-series cells.

2.1 Circuit Module Connections

Contacts on the circuit module provide the following connections:

- Direct connection to the cells: 1N, 1P, 2P, 3P, 4P, 5P
- To the serial communications port (SMBC, SMBD)
- The system load across CAPOUT and VSS
- The system power across System PWR and System GND
- To the fault pin (FAULT)

PIN NAME	DESCRIPTION
1N	-ve connection of first (bottom) cap
1P	+ve connection of first (bottom) cap
2P	+ve connection of second cap
3P	+ve connection of third cap
4P	+ve connection of fourth cap
5P	+ve connection of fifth (top) cap
SMBC	Serial communication clock port
SMBD	Serial communication data port

© 2011, Texas Instruments Incorporated

PIN NAME	DESCRIPTION
CAPOUT	System load positive terminal
VSS	System load negative terminal
System PWR	System power positive terminal
System GND	System power negative terminal
FAULT	Fault indicator pin

3 bq33100 Circuit Module Schematic

This section contains information to consider when changing the cell configuration.

3.1 Schematic

The schematic follows the bill of materials in this user's guide.

3.1.1 Modifications for Changing the Cell Configuration

The bq33100 charger provides the option for changing the 4 voltage levels for various cell configurations. The default configuration assumes a 5-cell configuration. An adjustment to these voltages will need to be made for 2-, 3-, or 4- cell configurations. Adjusting the charging levels requires changing out R5, R6, and R7. See Table 2 for common 2-, 3-, 4-, and 5- cell configurations.

Table 2. Common Charging Voltage Configurations for 2-, 3-, 4-, and 5- Cell Monitors

	2-Cell	3-Cell	4-Cell	5-Cell
R4	30kΩ	30kΩ	30kΩ	30kΩ
R5	137kΩ	93.1kΩ	68.1kΩ	57.6kΩ
R6	300kΩ	187kΩ	150kΩ	125kΩ
R7	44.2kΩ	19.6kΩ	12.7kΩ	9.31kΩ

Another modification to consider is to R26. This resistor is used to dissipate extra power in the learn load circuit. For 4- and 5-cell configurations the resistor should be 7.5 Ω, 2 W. For 2- and 3-cell configurations, R26 should be removed.

4 Circuit Module Physical Layouts and Bill of Materials

This section contains the board layout, bill of materials, and assembly drawings for the bq33100 circuit module.

4.1 Board Layout

This section shows the dimensions, PCB layers (Figure 1 through Figure 7), and assembly drawing for the bq33100 module.

© 2011, Texas Instruments Incorporated

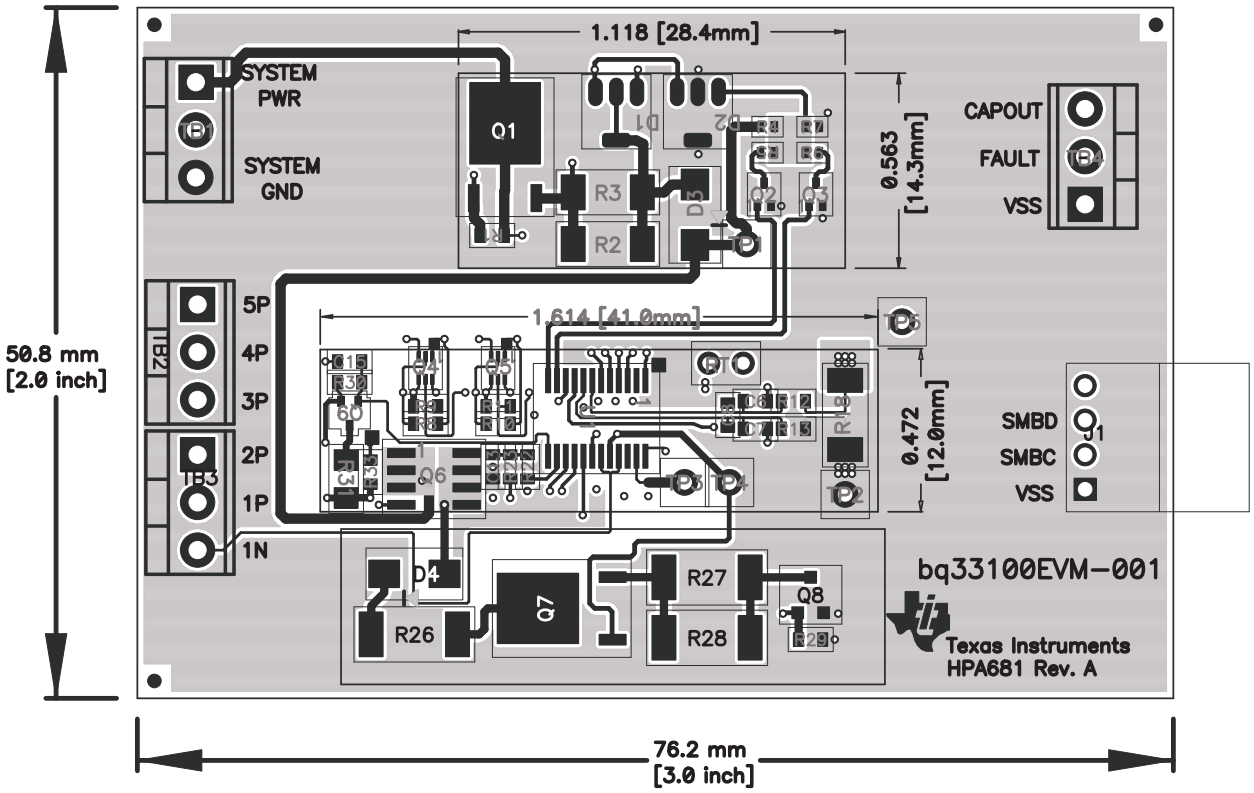

Figure 1. bq33100EVM-001 Layout (Silk Screen)

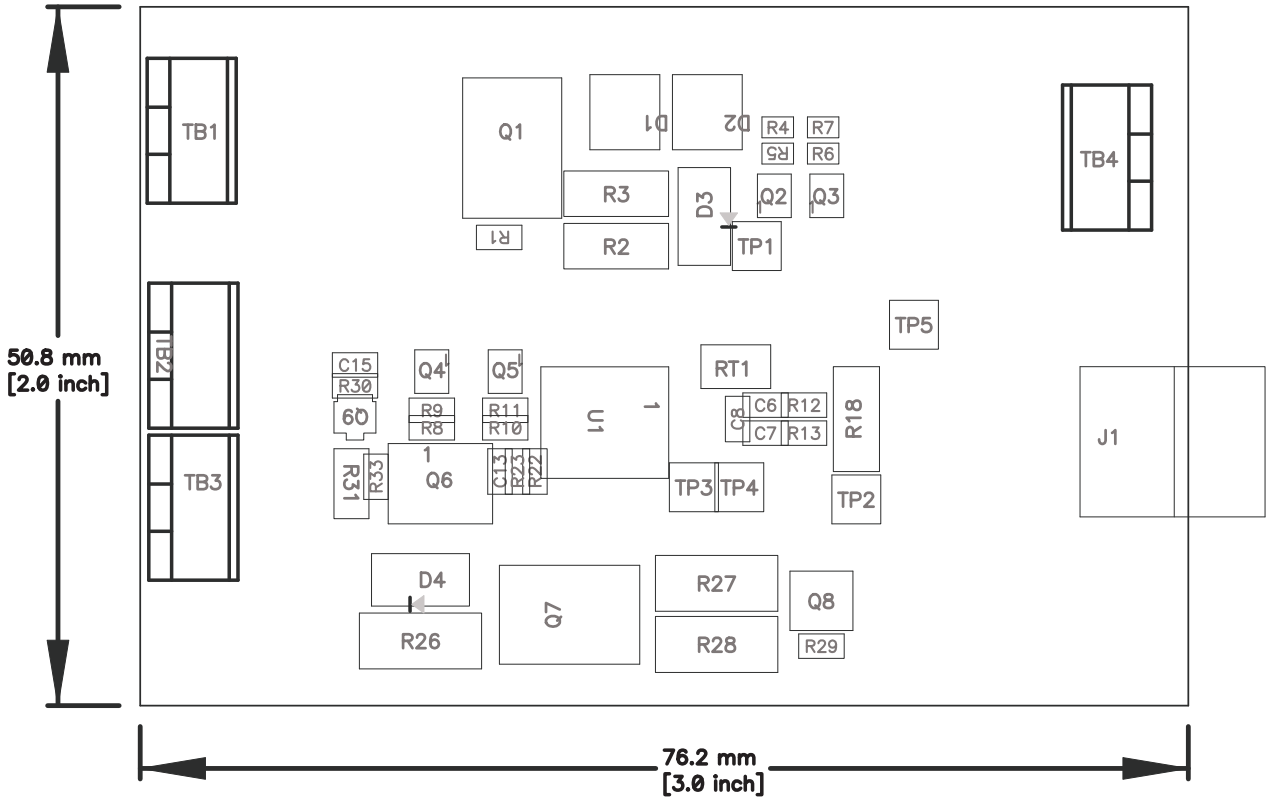

Figure 2. Top Assembly

© 2011, Texas Instruments Incorporated

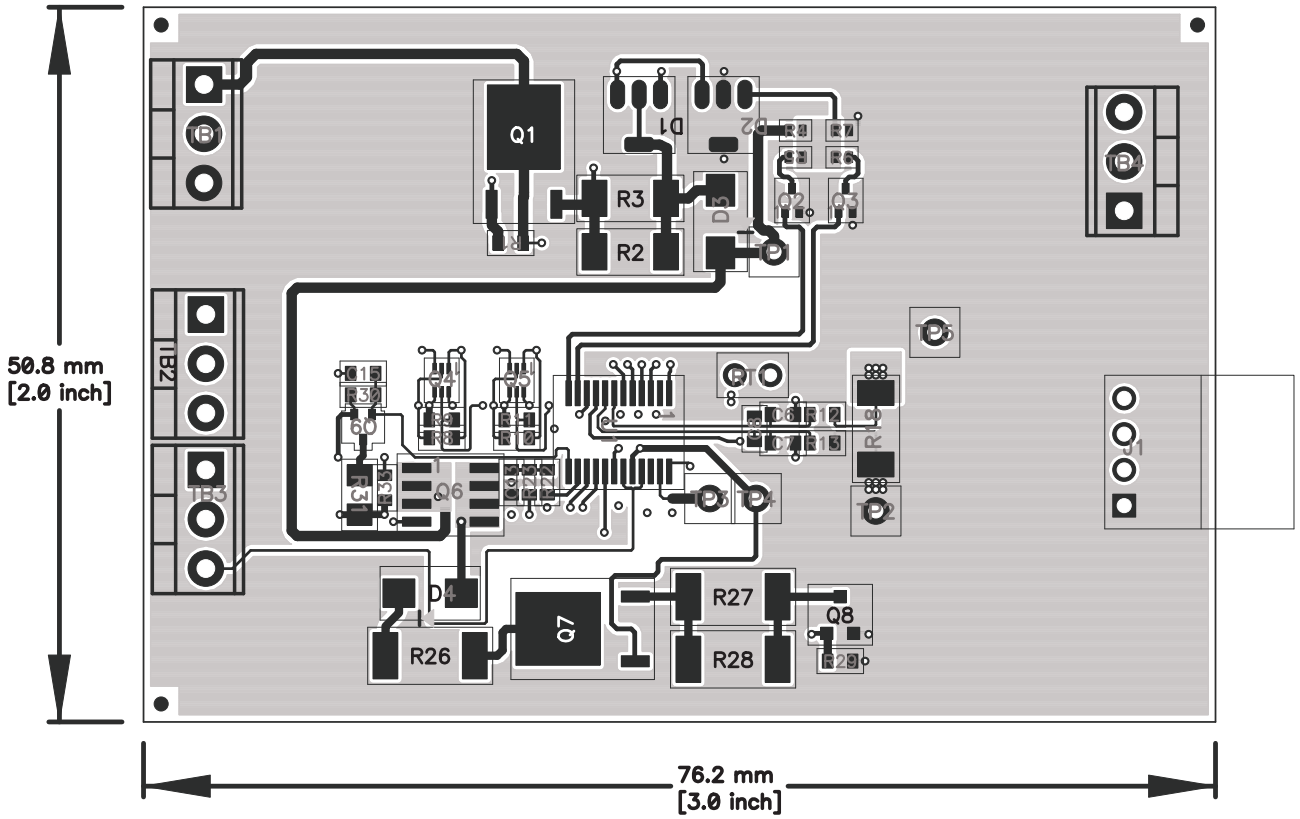

Figure 3. Top Layer

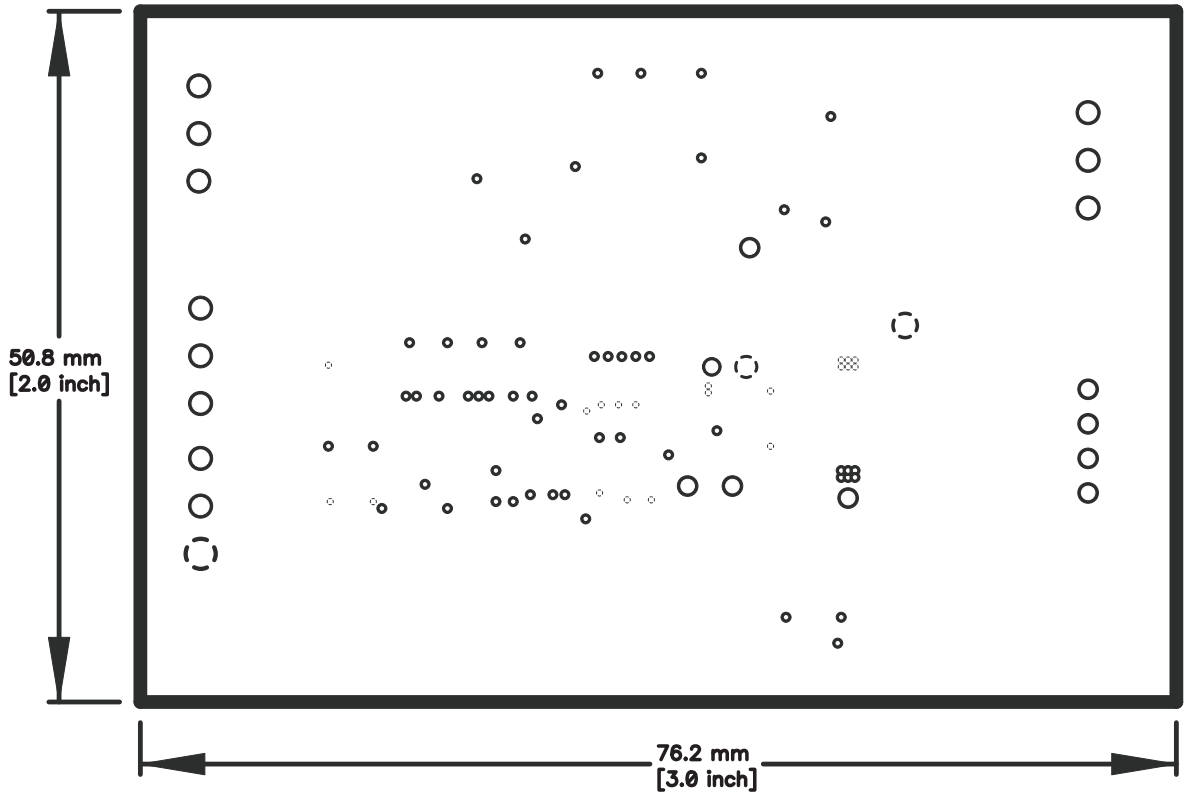

Figure 4. Internal Layer 1

© 2011, Texas Instruments Incorporated

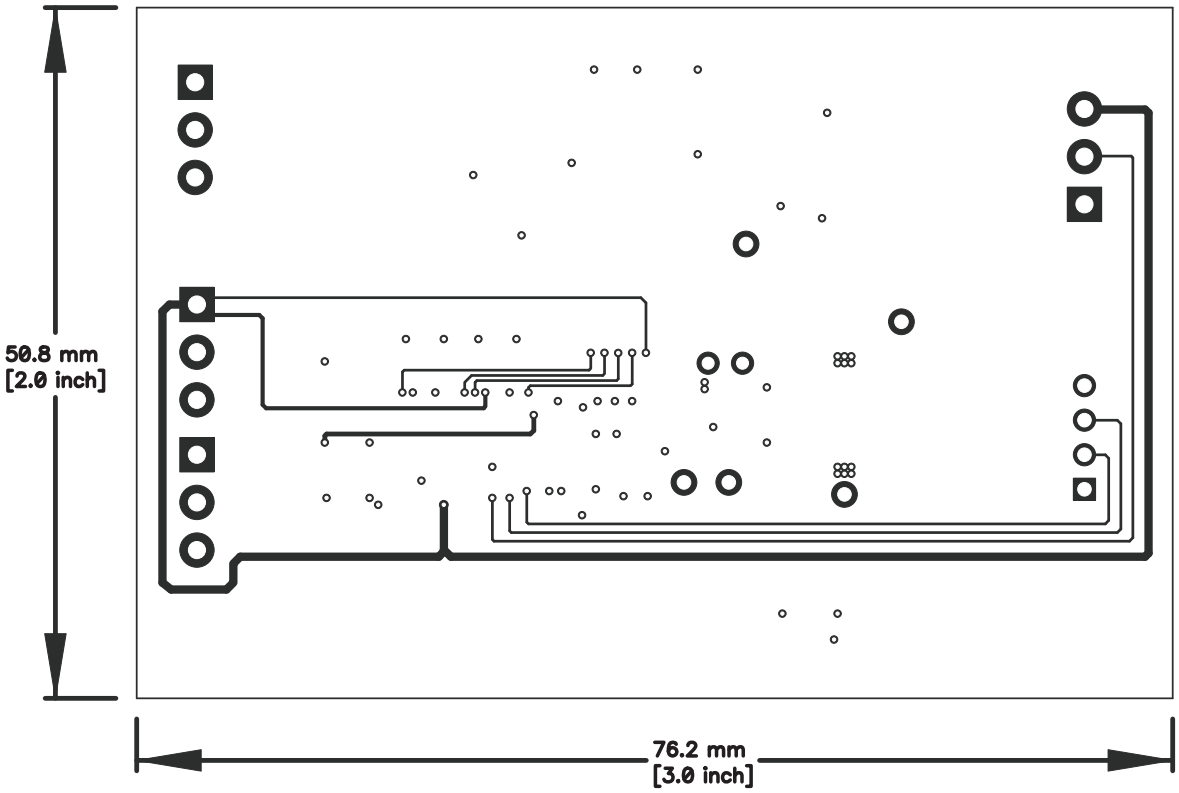

Figure 5. Internal Layer 2

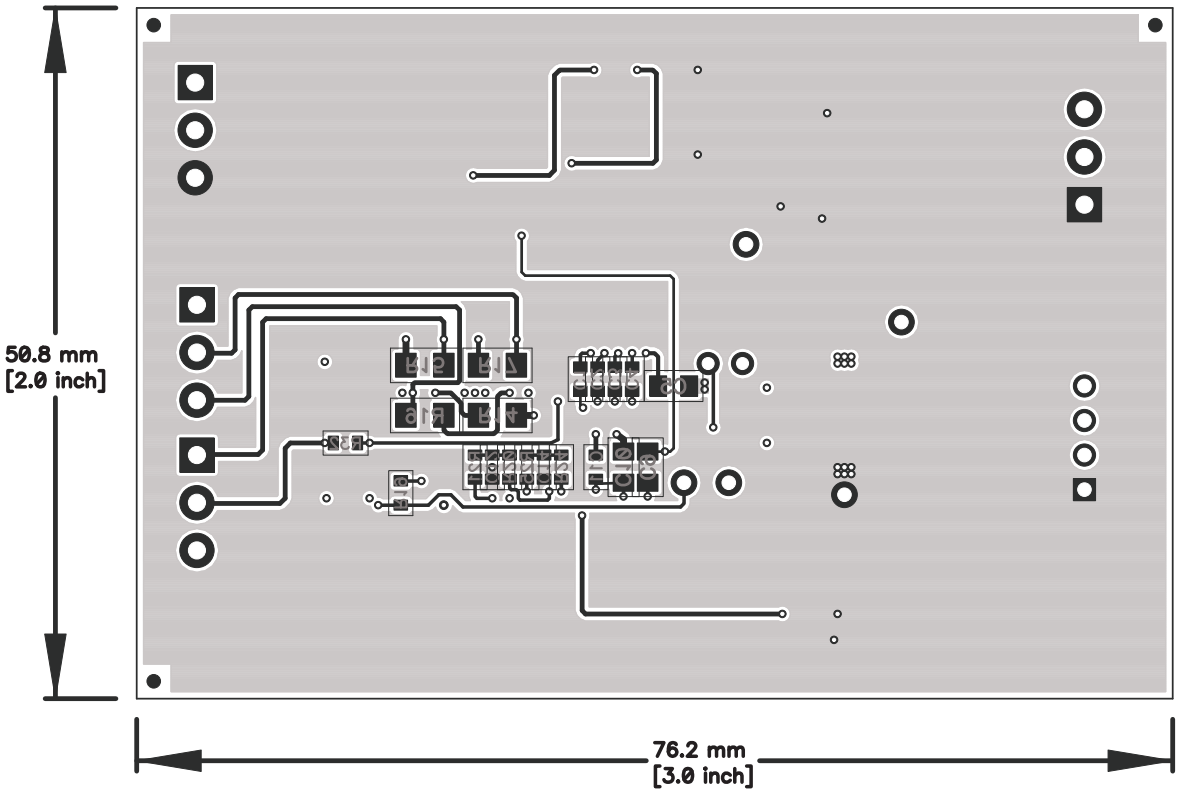

Figure 6. Bottom Layer

© 2011, Texas Instruments Incorporated

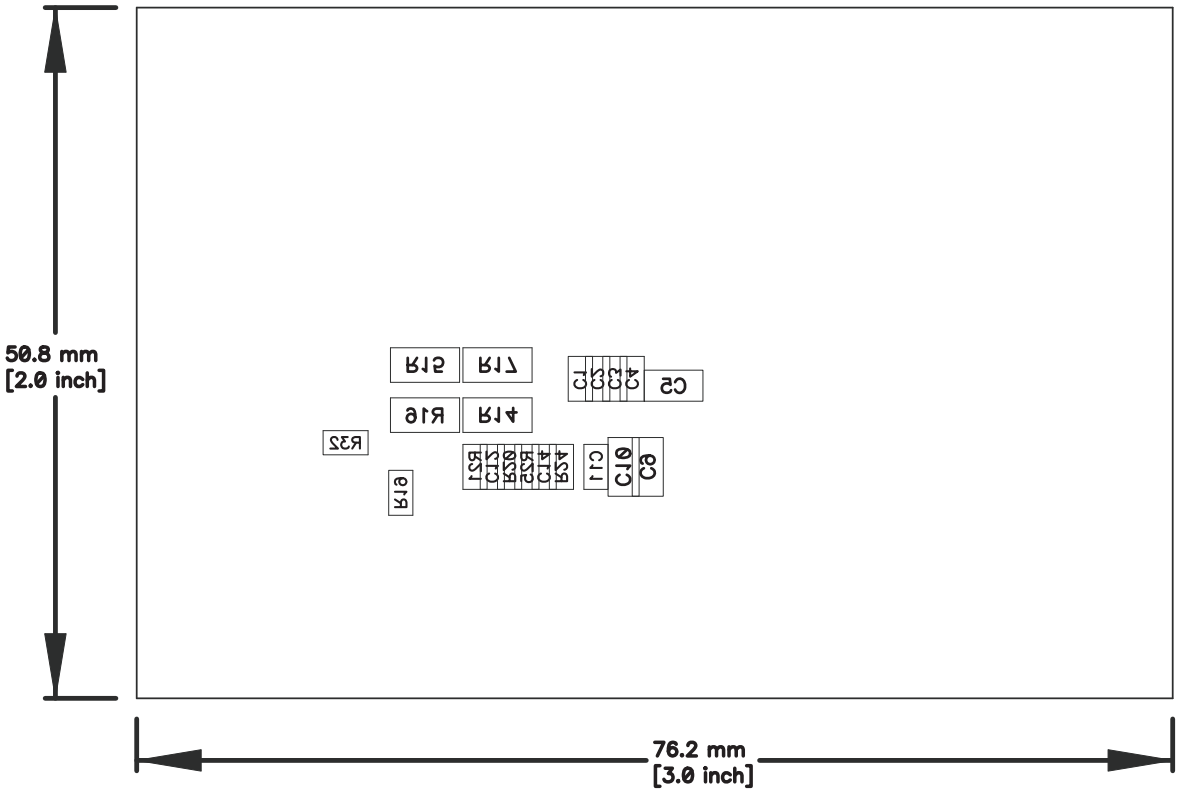

Figure 7. Bottom Assembly

© 2011, Texas Instruments Incorporated

4.2 Bill of Materials and Schematic

Table 3. Bill of Materials

COUNT	RefDes	Value	Description	SIZE	Part Number	Mfr
9	C1, C2, C3, C4, C6, C7, C8, C11, C15	0.1 µF	Capacitor, Ceramic, 50V, X7R, 20%	0603	STD	Any
3	C12, C13, C14	100 pF	Capacitor, Ceramic, 50V, X7R, 10%	0603	STD	Any
3	C5, C9, C10	1.0 µF	Capacitor, Ceramic, 25V, X7R, 20%	0805	STD	Any
2	D1, D2	TL431CPK	IC, Adjustable precision shunt regulator	SOT-89	TL431CPK	TI
2	D3, D4	S1A-13-F	Diode, Glass Passivated Rect. 1A, 50V	SMA	S1A-13-F	Diodes
1	J1	22-05-3041	Header, Friction Lock Ass'y, 4-pin Right Angle	0.400 x 0.500	22-05-3041	Molex
2	Q1, Q7	2SD1758TLR	Transistor, NPN Medium Power, 32V, 2A	SC-63	2SD1758TLR	Rohm
2	Q2, Q3	2SK3019	MOSFET, Nch, 30V, 100mA, 8 Ohm	SC-75A	2SK3019	Rohm
2	Q4, Q5	Si1023X	MOSFET, Pch, -20V, 350mA, 1.2 Ohm	SC-89	Si1023X-T1-E3	Vishay
1	Q6	Si4435DDY	MOSFET, Pch, 30V, 8.0A, 20 milliohm	SOT23	Si4435DDY-T1-E3	Vishay
1	Q8	ZXMN3A14FTA	MOSFET, Nch, 30V, 3.2A, 65 milliOhm	SOT23	ZXMN3A14FTA	Diodes/Zetex
1	Q9	BSS223PW	MOSFET, Pch, -20V, -0.39A, 1.2 Ohm	SOT323	BSS223PW	Infineon
5	R1, R8, R9, R10, R11	1K	Resistor, Chip, 1/16W, 5%	0603	STD	Any
5	R12, R13, R21, R23, R25	100	Resistor, Chip, 1/16W, 5%	0603	STD	Any
5	R14, R15, R16, R17, R31	100	Resistor, Chip, 1/4W, 5%	1206	CRCW1206100RJNEA	Vishay
1	R18	.020 75ppm	Resistor, Chip, 1/2W, 1%, 75ppm	2010	WSL2010R0200FEA	Dale
1	R19	3M	Resistor, Chip, 1/16W, 5%	0603	STD	Any
2	R2, R3	10	Resistor, Chip, 1W, 1%	2010	CRCW201010R0FKEFHP	Vishay/Dale
3	R20, R22, R24	200	Resistor, Chip, 1/16W, 5%	0603	STD	Any
1	R26	7.5	Resistor, Chip, 2W, 1%	2512	RHC2512FT7R50	Stackpole
2	R27, R28	8.2	Resistor, Chip, 1W, 1%	2512	ERJ-1TRQF8R2U	Panasonic - ECG
0	R29	DNP	Resistor, Chip, 1/16W, 5%	0603	STD	Any
1	R30	20K	Resistor, Chip, 1/16W, 5%	0603	STD	Any
1	R32	20K	Resistor, Chip, 1/16W, 1%	0603	STD	Any
1	R33	10K	Resistor, Chip, 1/16W, 1%	0603	STD	Any
1	R4	30.0K	Resistor, Chip, 1/16W, 1%	0402	STD	Any
1	R5	57.6K	Resistor, Chip, 1/16W, 1%	0402	STD	Any
1	R6	124K	Resistor, Chip, 1/16W, 1%	0402	STD	Any
1	R7	9.31K	Resistor, Chip, 1/16W, 1%	0402	STD	Any

© 2011, Texas Instruments Incorporated

Table 3. Bill of Materials (continued)

COUNT	RefDes	Value	Description	SIZE	Part Number	Mfr
1	RT1	10K	Thermistor, 10K Ohm	0.095 x 0.150 inches	103AT-2	Semitec
4	TB1, TB2, TB3, TB4	ED555/3DS	Terminal Block, 3-pin, 6A, 3.5mm	0.41 x 0.25 inch	ED555/3DS	OST
1	TP1	CHG+	Test Point, White, Thru Hole Color Keyed	0.100 x 0.100 inch	5002	Keystone
1	TP2	CHG-	Test Point, White, Thru Hole Color Keyed	0.100 x 0.100 inch	5002	Keystone
1	TP3	CHGFET	Test Point, White, Thru Hole Color Keyed	0.100 x 0.100 inch	5002	Keystone
1	TP4	2.7V	Test Point, White, Thru Hole Color Keyed	0.100 x 0.100 inch	5002	Keystone
1	TP5	GND	Test Point, White, Thru Hole Color Keyed	0.100 x 0.100 inch	5002	Keystone
1	U1	BQ33100PW	IC, SUPERCAP PACKMANAGER and PROTECTION	TSSOP-24	BQ33100PW	TI
1	–		PCB	2 x 3 inches	HPA681	Any
Connector						
2		J1 mate	Connector, Female, 0.100 Centers		Molex	22-01-3047
8		N/A	Terminals, Crimp, Tin		Molex	08-50-0114
1		N/A	Wire, Insulated 24 Awg, Red, 18 Inches (+/- 3 inches)(USB_5V)		Alpha	1854-3
1		N/A	Wire, Insulated 24 Awg, White, 18 Inches (+/- 3 inches)(SCL)		Alpha	1854-1
1		N/A	Wire, Insulated 24 Awg, Black, 18 Inches (+/- 3 inches)(GND)		Alpha	1854-2
1		N/A	Wire, Insulated 24 Awg, Brown, 18 Inches (+/- 3 inches) (SDA)		Alpha	1854-7
1		N/A	Heatshrink 1"		Any	Any

© 2011, Texas Instruments Incorporated

Table 3. Bill of Materials (continued)

COUNT	RefDes	Value	Description	SIZE	Part Number	Mfr
	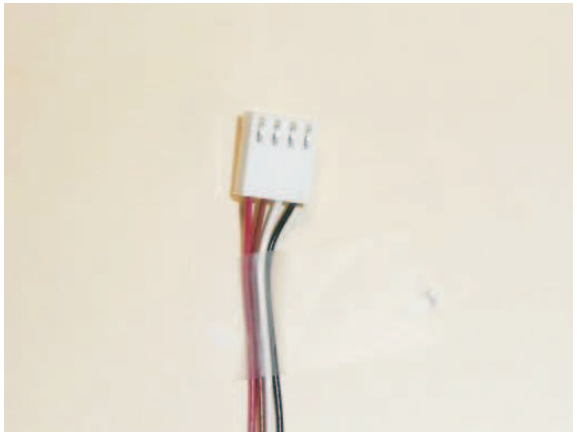			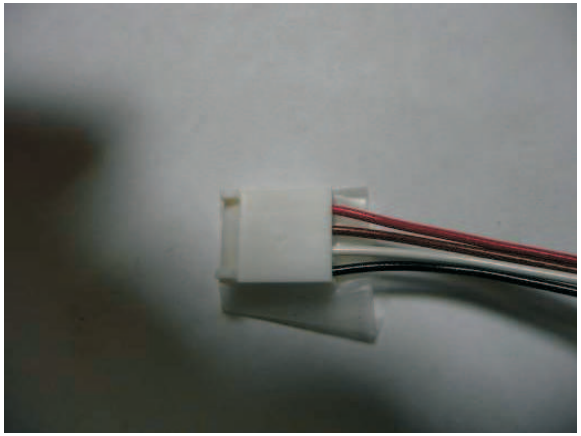		
Notes:	1. These assemblies are ESD sensitive, ESD precautions shall be observed.					
	2. These assemblies must be clean and free from flux and all contaminants. Use of no clean flux is not acceptable.					
	3. These assemblies must comply with workmanship standards IPC-A-610 Class 2.					
	4. Ref designators marked with an asterisk ('**') cannot be substituted. All other components can be substituted with equivalent MFG's components.					
	5. Make one SMBus connector wire assembly for each assembly produced, from J1 mate, 4 - 24 Awg wires and Crimp terminals. Wire colors for Pin numbers are listed below. The wire assembly shall have a J1 mate on each end.					
	Red - Pin # 4 (Signal USB_5V)					
	Brown - Pin # 3 (Signal SDA)					
	White - Pin # 2 (Signal SCL)					
	Black - Pin # 1 (GND)					
	6. RT1 should be assembled horizontally laying flat against the board Edge.					

© 2011, Texas Instruments Incorporated

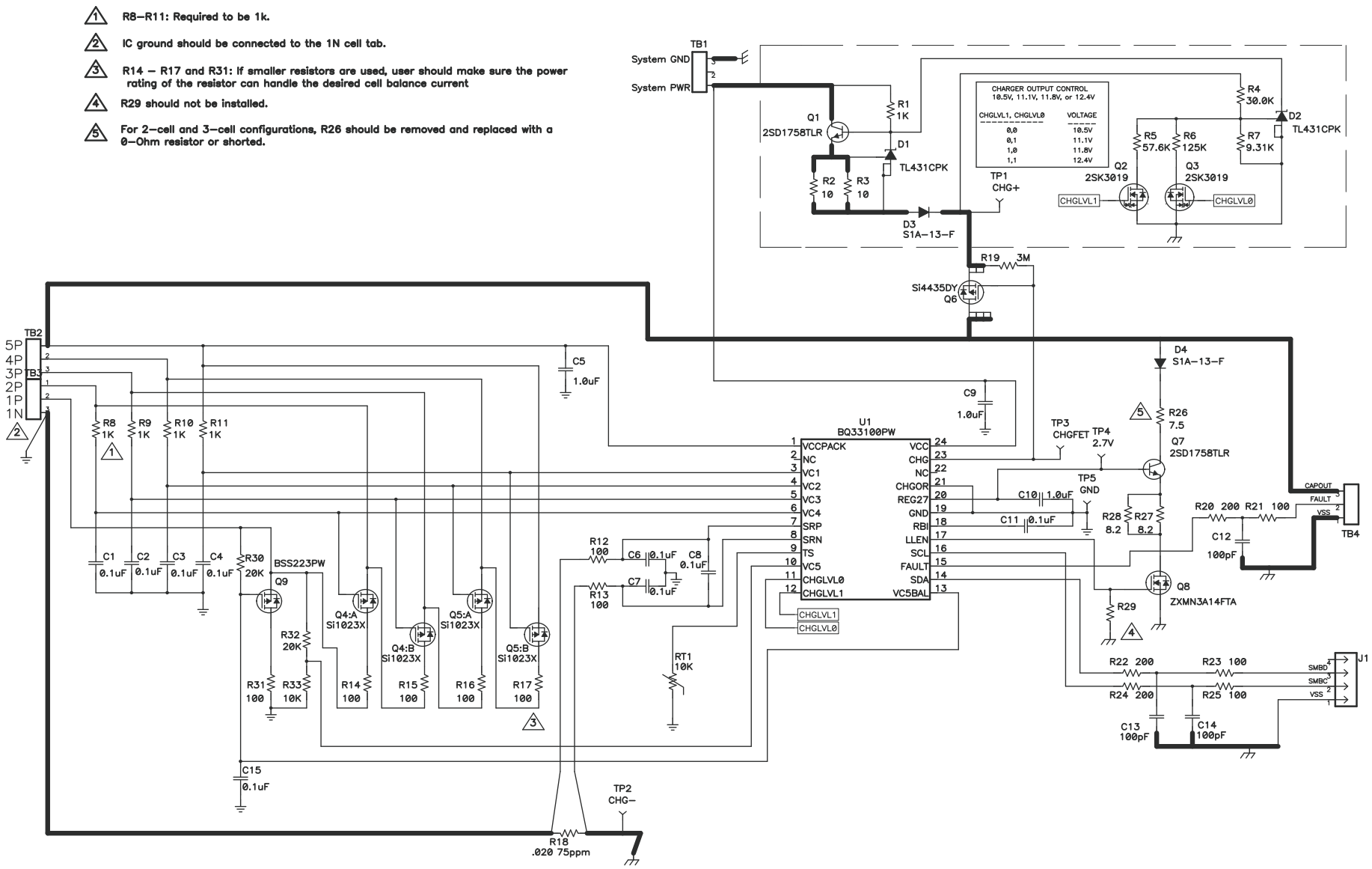

Figure 8. Schematic

© 2011, Texas Instruments Incorporated

4.3 bq33100 Circuit Module Performance Specification Summary

Table 4. Performance Specification Summary

Specification	Minimum	Typical	Maximum	Units
Input Voltage System PWR to System GND	6	12	15	V
Discharge current	0	2	7	A

5 EVM Hardware and Software Setup

This section describes how to install the bq33100EVM-001 PC software, and how to connect the different components of the EVM.

5.1 System Requirements

The bq33100EVSW software requires Windows™ 2000 or Windows XP™. Drivers for Windows 98SE are provided, but Microsoft™ no longer supports Windows 98 and there may be issues in Windows 98 with USB driver support. The EV2300 USB drivers have been tested for Windows 98SE, but no assurance is made for problem-free operation with specific system configurations.

5.2 Software Installation

Get the latest software version in the bq33100 tool folder on www.ti.com, and follow these steps to install the bq33100 EVSW software:

1. Save the archive to a temporary directory. Open the archive containing the installation package, and copy its contents to a temporary directory. The executable filename can consist of several component names and versions. Double-click on the executable filename, and follow the installer instructions to complete the bq33100 EVM installation.
2. If the EV2300 was not previously installed, after bq33100 EVM installation, a TI USB DRIVER INSTALLER pops up. Click "Yes" for the agreement message and follow its instructions.
3. Plug the EV2300 into a USB port.

6 Troubleshooting Unexpected Dialog Boxes

Ensure that the files were extracted from the zip file using the *Preserve Folder names* option.

Ensure that all the files were extracted from the zip file.

The user that is downloading the files must be logged in as the administrator.

The driver is not signed, so the administrator must allow installation of unsigned drivers in the operating system policy.

7 Hardware Connection

The bq33100EVM-001 comprises three hardware components: the bq33100 circuit module, the EV2300 PC interface board, and the PC.

7.1 Connecting bq33100 Circuit Module to Super Capacitor Stack

Figure 9 shows how to connect the bq33100 circuit module to the super capacitors, system load, and system power.

The super capacitors should be connected in the following order:

1. 5-Cell Pack: 1N, 1P, 2P, 3P, 4P, and 5P (see Section 2.1 for definitions).
2. 4-Cell Pack: 1N and 1P are connected together, 2P, 3P, 4P, and 5P.
3. 3-Cell Pack: 1N and 1P are connected together, 2P, 3P, and then connect 4P and 5P together.
4. 2-Cell Pack: 1N and 1P are connected together, 2P, and then connect 3P, 4P and 5P together.

© 2011, Texas Instruments Incorporated

Connect the system load between the CAPOUT and VSS terminals. Connect the system power between the System PWR and System GND terminals.

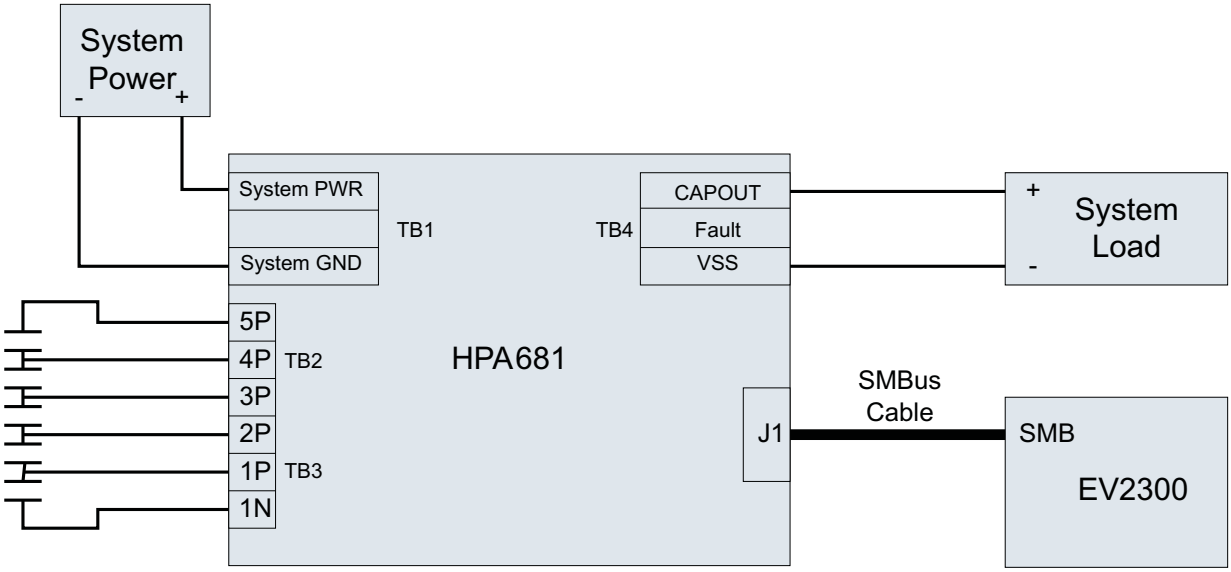

Figure 9. bq33100 Circuit Module Connection to Cells, System Load, and System Power

7.2 PC Interface Connection

The following steps configure the hardware for interface to the PC:

1. Connect the bq33100 circuit module to the EV2300 using wire leads as shown in Table 5.

Table 5. Circuit Module to EV2300 Connections

bq33100 Circuit Module	EV2300
SMBD	SMBD
SMBC	SMBC
VSS	GND

2. Connect the PC USB cable to the EV2300 and the PC USB port.

The bq33100EVM-001 is now set up for operation.

8 Operation

This section details the operation of the bq33100 EVSW software.

8.1 Starting the Program

Run bq Evaluation Software from the Start | Programs | Texas Instruments | bq33100 EVSW menu sequence. The SBS Data screen (Figure 10) appears. Data begins to appear once the <Refresh> (single time scan) button is clicked, or when the <Keep Scanning> check box is checked. To disable the scan feature, deselect <Keep Scanning>.

The continuous scanning period can be set via the | Options | and | Set Scan Interval | menu selections. The range for this interval is 0 ms to 65535 ms. Only items that are selected for scanning are scanned within this period.

The bq Evaluation Software provides a logging function which logs the values that were last scanned by EVSW. To enable this function, select the *Start Logging* button, this causes the *Keep Scanning* button to be selected. When logging is *Stopped*, the keep scanning button is still selected and has to be manually unchecked.

© 2011, Texas Instruments Incorporated

The logging intervals are specified under the | Options | menu with the maximum value of 65535 ms. The *Log* interval cannot be smaller than the *Scan* interval because this results in the same value being logged at least twice.

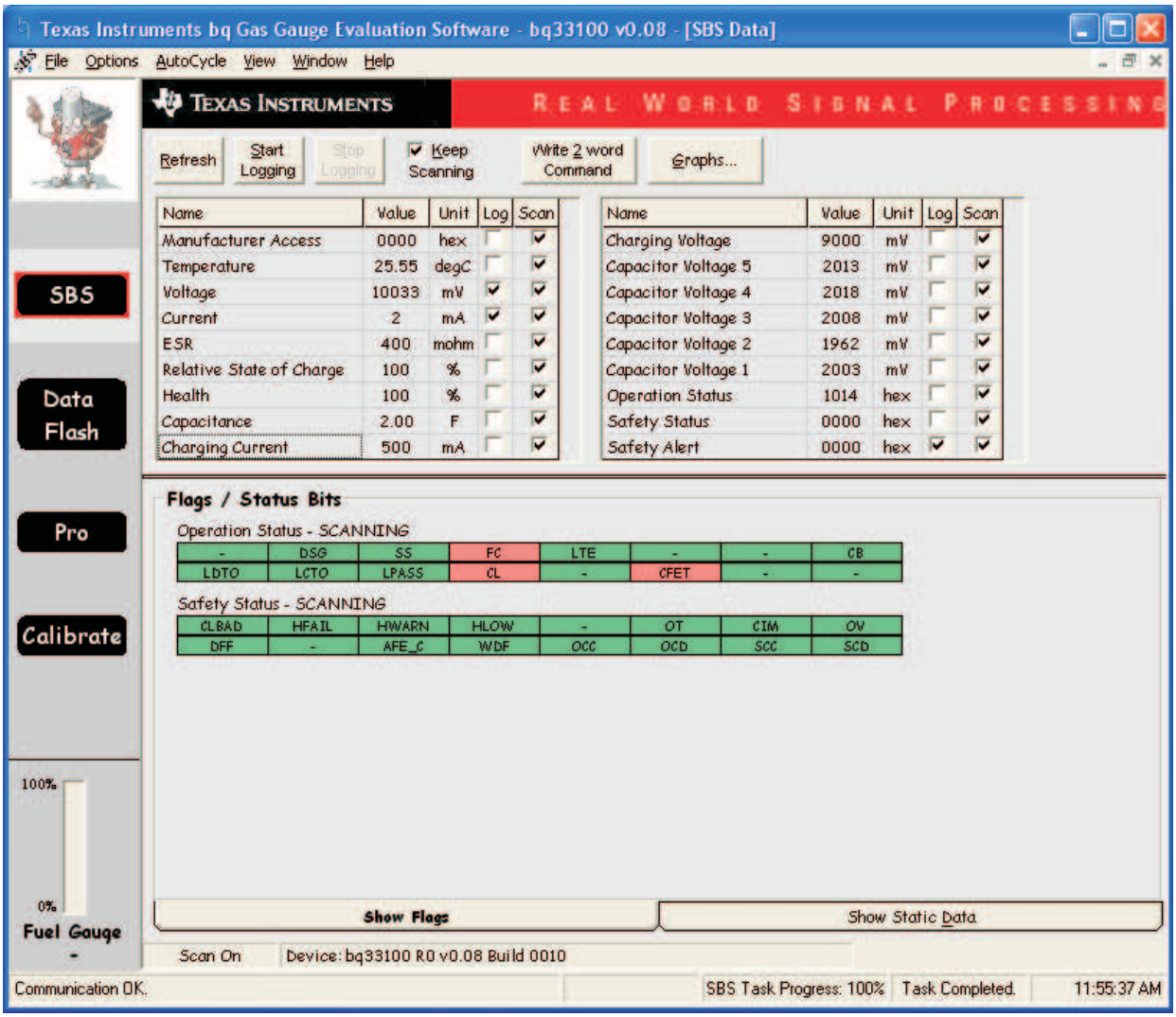

Figure 10. SBS Data Screen

This screen (Figure 10) shows the SBS data set along with additional ManufacturersAccess() command information such as individual cell measurements. Additional Flag and Static data can be viewed by selecting the appropriate tab at the bottom of the SBS screen.

Data such as SBS.ManufacturerName( ) is static and does not change. This data is viewed separately using the *Static Data* tab available at the bottom of the screen.

Dragging the splitter bar (line that separates the Flags/Static data from SBS values) changes the height of the Flags/Static Data display. Selecting | View |, then | Auto Arrange | returns the splitter bar to its original location.

© 2011, Texas Instruments Incorporated

8.2 Setting Programmable bq33100 Options

The bq33100 data flash comes configured per the default settings detailed in the bq33100 data sheet. Ensure that the settings are correctly changed to match the capacitor stack and application for the bq33100 solution being evaluated.

IMPORTANT: The correct setting of these options is essential to get the best performance.

The settings can be configured using the Data Flash screen (Figure 11).

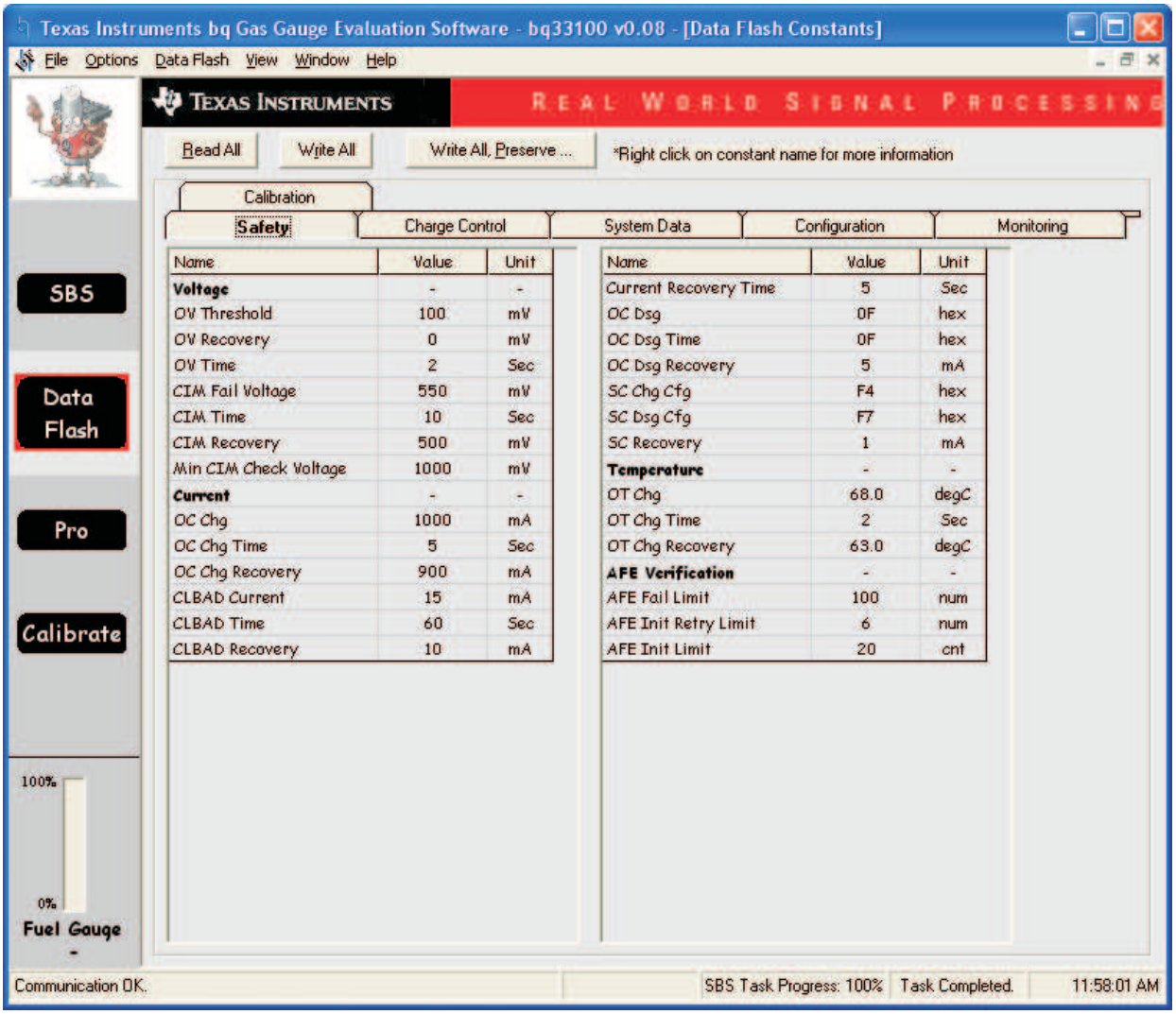

Name	Value	Unit
Voltage	-	-
OV Threshold	100	mV
OV Recovery	0	mV
OV Time	2	Sec
CIM Fail Voltage	550	mV
CIM Time	10	Sec
CIM Recovery	500	mV
Min CIM Check Voltage	1000	mV
Current	-	-
OC Chg	1000	mA
OC Chg Time	5	Sec
OC Chg Recovery	900	mA
CLBAD Current	15	mA
CLBAD Time	60	Sec
CLBAD Recovery	10	mA

Name	Value	Unit
Current Recovery Time	5	Sec
OC Dsg	0F	hex
OC Dsg Time	0F	hex
OC Dsg Recovery	5	mA
SC Chg Cfg	F4	hex
SC Dsg Cfg	F7	hex
SC Recovery	1	mA
Temperature	-	-
OT Chg	68.0	degC
OT Chg Time	2	Sec
OT Chg Recovery	63.0	degC
AFE Verification	-	-
AFE Fail Limit	100	num
AFE Init Retry Limit	6	num
AFE Init Limit	20	cnt

Figure 11. Data Flash Screen, Safety Class

To read all the data from the bq33100 data flash, click on menu option | Data Flash | Read All |.

To write to a data flash location, click on the desired location, enter the data and press <Enter>, which writes the entire tab of flash data, or select menu option | Data Flash | Write All |. The data flash must be read before any writes are performed to avoid any incorrect data being written to the device.

The | File | Special Export | menu options allows the data flash to be exported, but it configures the exported data flash to a learned state ready for mass production use.

The data flash configuration can be saved to a file by selecting | File | Export | and entering a file name. A data flash file also can be retrieved in this way, imported, and written to the bq33100 using the | Write All | button.

© 2011, Texas Instruments Incorporated

The configuration information of the bq33100 and module calibration data also is held in the bq33100 data flash.

The bq33100 allows for an automatic data flash export function, similar to the SBS Data logging function. This feature, when selected via | Options | Auto Export |, exports Data Flash to a sequential series of files named as *FilenameNNNNN.gg* where N = a decimal number from 0 to 9.

The AutoExport interval is set under the | Options menu | with a minimum value of 15 s. The AutoExport filename also is set under the | Options menu |.

When a check mark is next to | AutoExport |, the AutoExport is in progress. The same menu selection is used to turn on / off AutoExport.

If the data flash screen is blank, then the bq33100 that is being used may not be supported by the bqEVSW version that is being used. An upgrade may be required.

9 Calibration Screen

9.1 How to Calibrate

Before the bq33100 is calibrated:

- Connect 12V to System PWR and System GND inputs
- Connect a load to CAPOUT and VSS that draws approximately 0.5 A and measures discharge current to use the FET, or
- Connect a current source to 1N and VSS to calibrate without using the FET.
- Measure individual cell stack voltage from 1N, to Cap1(1P), Cap1 + 2(2P), Cap1 + 2 + 3(3P), Cap1 + 2 + 3 + 4(4P), Cap1 + 2 + 3 + 4 + 5(5P).
- Measure the voltage from the System PWR to System GND inputs
- Measure the temperature of the pack.

These steps may not be required, depending on the type of calibration being performed.

Note that voltage calibration with capacitors attached requires special consideration. Capacitors must be in a resting state.

9.2 To Calibrate the bq33100

Select the types of calibration to be performed (see Figure 12).

Enter the measured values for the types selected.

If *Capacitor Stack Voltage Calibration* is selected, then enter the capacitor voltages.

If the load is connected between CAPOUT and VSS-, then select the *On (External Load)* radio button.

Press the *Calibrate Part* button.

9.3 System Voltage Calibration

This calibrates the voltage at the VCC pin.

Make sure *Capacitor Stack Voltage Calibration* has been performed for the pack. If *Capacitor Stack Voltage Calibration* is not performed, then *System Voltage Calibration* calibrates incorrectly.

Remove load/external voltage applied between CAPOUT and VSS.

Check the *System Voltage Calibration* box, and enter the measured System PWR voltage

Press the *Calibrate device as indicated below* button to calibrate.

© 2011, Texas Instruments Incorporated

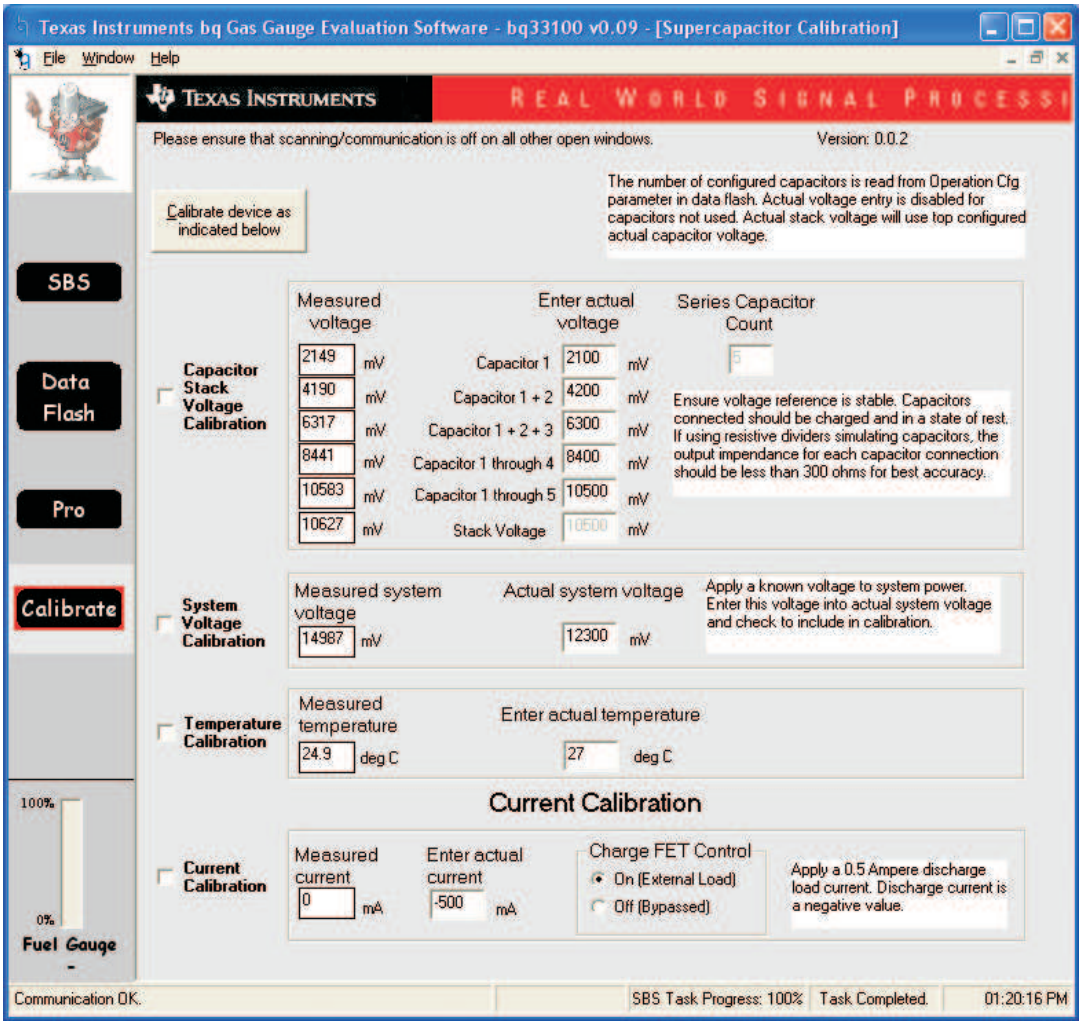

Figure 12. Calibration Screen

10 Pro (Advanced) Screen

10.1 SMB Communication

The set of read/write operations over SMBus are not specific to any gas gauge. These are provided as general-purpose communication tools (Figure 13).

10.2 Hexadecimal/Decimal Converter

These two boxes convert between hexadecimal and decimal as soon as values are typed into the boxes. Invalid values may cause erroneous results.

When scaling converted hexadecimal values to a higher number of bytes, follow these rules:

- When unsigned is selected, the left pad contains zeroes.
- When signed is selected, the left pad contains zeroes for a positive number, or the left pad contains *F* for negative numbers.

© 2011, Texas Instruments Incorporated

10.3 Programming

This screen allows device reprogramming from unencrypted and encrypted files.

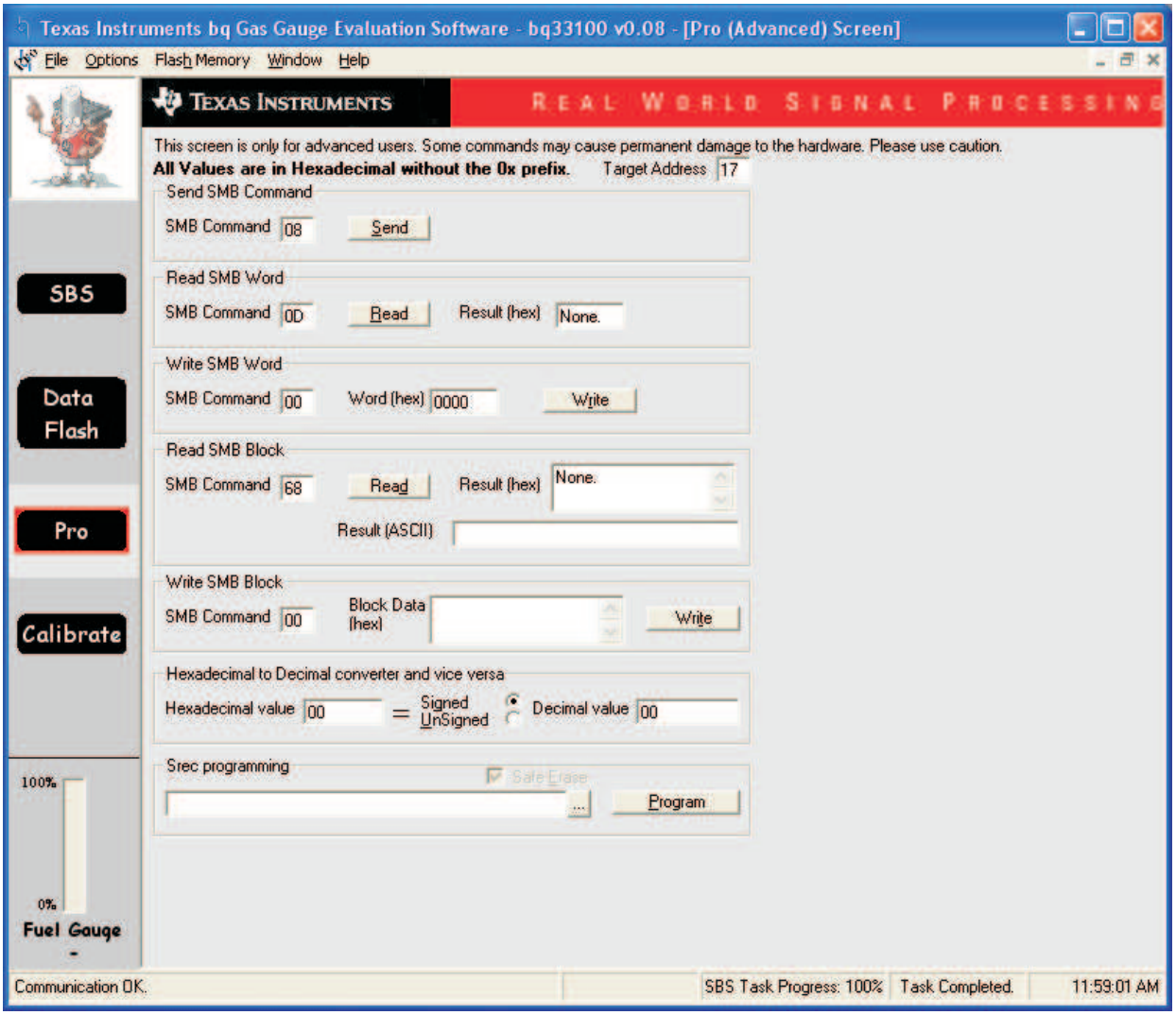

Figure 13. Pro (Advanced) Screen

© 2011, Texas Instruments Incorporated

11 Stack Assembly and the bq33100

This section describes a recommended assembly sequence for a bq33100-based super capacitor stack. This procedure results in the most time-efficient setup of the super capacitor stack. Following are the steps for connecting a 5-series capacitor stack to the bq33100EVM board.

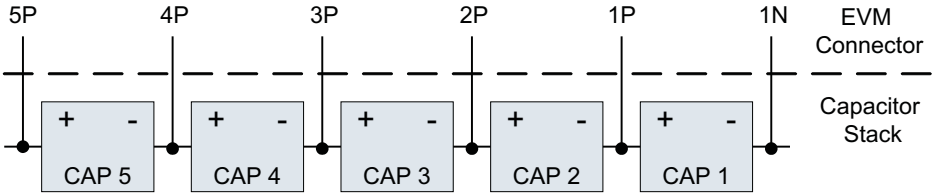

Figure 14. Connection Sequence

1. Connect the most negative terminal (– terminal of cap 1) of the serially-connected, 5-capacitor stack to the 1N PIN of the TB2–TB3 connector as shown in Figure 14. (See also Figure 9 for TB2–TB3 location).
2. Connect the positive terminal of cell 1 to 1P.
3. Connect the positive terminal of cell 2 to 2P.
4. Connect the positive terminal of cell 3 to 3P.
5. Connect the positive terminal of cell 4 to 4P.
6. Connect the positive terminal of the capacitor stack (+) to 5P.
7. Connect external power (from 6 V to 15 V) to the System PWR and System GND terminals to wake up the EVM from shutdown mode.
8. Connect the SMBus connector (J1) to the EV2300 adapter and start the EV software.
9. Navigate to the *Flash Screen*. Change the flash constants that correspond to the specific parameters of your application (see the data sheet). For the first evaluation, the default values may be used.
10. Navigate to the *Calibration screen*. Select the check-box for software voltage calibration near *Measured voltage* field. Measure between 1P and 1N for capacitor 1, 2P and 1N for capacitors 1 + 2, 3P and 1N for capacitors 1 + 2 + 3, 4P and 1N for capacitors 1 + 2 + 3 + 4, 5P and 1N for capacitors 1 + 2 + 3 + 4 + 5 and enter the values into the *Enter actual voltage* field. Click the *calibrate part* button.
11. Now the pack is ready and charge/discharge tests can be conducted.

© 2011, Texas Instruments Incorporated

Evaluation Board/Kit Important Notice

Texas Instruments (TI) provides the enclosed product(s) under the following conditions:

This evaluation board/kit is intended for use for **ENGINEERING DEVELOPMENT, DEMONSTRATION, OR EVALUATION PURPOSES ONLY** and is not considered by TI to be a finished end-product fit for general consumer use. Persons handling the product(s) must have electronics training and observe good engineering practice standards. As such, the goods being provided are not intended to be complete in terms of required design-, marketing-, and/or manufacturing-related protective considerations, including product safety and environmental measures typically found in end products that incorporate such semiconductor components or circuit boards. This evaluation board/kit does not fall within the scope of the European Union directives regarding electromagnetic compatibility, restricted substances (RoHS), recycling (WEEE), FCC, CE or UL, and therefore may not meet the technical requirements of these directives or other related directives.

Should this evaluation board/kit not meet the specifications indicated in the User's Guide, the board/kit may be returned within 30 days from the date of delivery for a full refund. THE FOREGOING WARRANTY IS THE EXCLUSIVE WARRANTY MADE BY SELLER TO BUYER AND IS IN LIEU OF ALL OTHER WARRANTIES, EXPRESSED, IMPLIED, OR STATUTORY, INCLUDING ANY WARRANTY OF MERCHANTABILITY OR FITNESS FOR ANY PARTICULAR PURPOSE.

The user assumes all responsibility and liability for proper and safe handling of the goods. Further, the user indemnifies TI from all claims arising from the handling or use of the goods. Due to the open construction of the product, it is the user's responsibility to take any and all appropriate precautions with regard to electrostatic discharge.

EXCEPT TO THE EXTENT OF THE INDEMNITY SET FORTH ABOVE, NEITHER PARTY SHALL BE LIABLE TO THE OTHER FOR ANY INDIRECT, SPECIAL, INCIDENTAL, OR CONSEQUENTIAL DAMAGES.

TI currently deals with a variety of customers for products, and therefore our arrangement with the user **is not exclusive.**

TI assumes **no liability for applications assistance, customer product design, software performance, or infringement of patents or services described herein.**

Please read the User's Guide and, specifically, the Warnings and Restrictions notice in the User's Guide prior to handling the product. This notice contains important safety information about temperatures and voltages. For additional information on TI's environmental and/or safety programs, please contact the TI application engineer or visit www.ti.com/esh.

No license is granted under any patent right or other intellectual property right of TI covering or relating to any machine, process, or combination in which such TI products or services might be or are used.

FCC Warning

This evaluation board/kit is intended for use for **ENGINEERING DEVELOPMENT, DEMONSTRATION, OR EVALUATION PURPOSES ONLY** and is not considered by TI to be a finished end-product fit for general consumer use. It generates, uses, and can radiate radio frequency energy and has not been tested for compliance with the limits of computing devices pursuant to part 15 of FCC rules, which are designed to provide reasonable protection against radio frequency interference. Operation of this equipment in other environments may cause interference with radio communications, in which case the user at his own expense will be required to take whatever measures may be required to correct this interference.

EVM Warnings and Restrictions

It is important to operate this EVM within the input voltage range of 6 V to 15 V and the output voltage range of 0 V to 16.4 V .

Exceeding the specified input range may cause unexpected operation and/or irreversible damage to the EVM. If there are questions concerning the input range, please contact a TI field representative prior to connecting the input power.

Applying loads outside of the specified output range may result in unintended operation and/or possible permanent damage to the EVM. Please consult the EVM User's Guide prior to connecting any load to the EVM output. If there is uncertainty as to the load specification, please contact a TI field representative.

During normal operation, some circuit components may have case temperatures greater than 60°C. The EVM is designed to operate properly with certain components above 60°C as long as the input and output ranges are maintained. These components include but are not limited to linear regulators, switching transistors, pass transistors, and current sense resistors. These types of devices can be identified using the EVM schematic located in the EVM User's Guide. When placing measurement probes near these devices during operation, please be aware that these devices may be very warm to the touch.

Mailing Address: Texas Instruments, Post Office Box 655303, Dallas, Texas 75265
Copyright © 2011, Texas Instruments Incorporated

IMPORTANT NOTICE

Texas Instruments Incorporated and its subsidiaries (TI) reserve the right to make corrections, modifications, enhancements, improvements, and other changes to its products and services at any time and to discontinue any product or service without notice. Customers should obtain the latest relevant information before placing orders and should verify that such information is current and complete. All products are sold subject to TI's terms and conditions of sale supplied at the time of order acknowledgment.

TI warrants performance of its hardware products to the specifications applicable at the time of sale in accordance with TI's standard warranty. Testing and other quality control techniques are used to the extent TI deems necessary to support this warranty. Except where mandated by government requirements, testing of all parameters of each product is not necessarily performed.

TI assumes no liability for applications assistance or customer product design. Customers are responsible for their products and applications using TI components. To minimize the risks associated with customer products and applications, customers should provide adequate design and operating safeguards.

TI does not warrant or represent that any license, either express or implied, is granted under any TI patent right, copyright, mask work right, or other TI intellectual property right relating to any combination, machine, or process in which TI products or services are used. Information published by TI regarding third-party products or services does not constitute a license from TI to use such products or services or a warranty or endorsement thereof. Use of such information may require a license from a third party under the patents or other intellectual property of the third party, or a license from TI under the patents or other intellectual property of TI.

Reproduction of TI information in TI data books or data sheets is permissible only if reproduction is without alteration and is accompanied by all associated warranties, conditions, limitations, and notices. Reproduction of this information with alteration is an unfair and deceptive business practice. TI is not responsible or liable for such altered documentation. Information of third parties may be subject to additional restrictions.

Resale of TI products or services with statements different from or beyond the parameters stated by TI for that product or service voids all express and any implied warranties for the associated TI product or service and is an unfair and deceptive business practice. TI is not responsible or liable for any such statements.

TI products are not authorized for use in safety-critical applications (such as life support) where a failure of the TI product would reasonably be expected to cause severe personal injury or death, unless officers of the parties have executed an agreement specifically governing such use. Buyers represent that they have all necessary expertise in the safety and regulatory ramifications of their applications, and acknowledge and agree that they are solely responsible for all legal, regulatory and safety-related requirements concerning their products and any use of TI products in such safety-critical applications, notwithstanding any applications-related information or support that may be provided by TI. Further, Buyers must fully indemnify TI and its representatives against any damages arising out of the use of TI products in such safety-critical applications.

TI products are neither designed nor intended for use in military/aerospace applications or environments unless the TI products are specifically designated by TI as military-grade or "enhanced plastic." Only products designated by TI as military-grade meet military specifications. Buyers acknowledge and agree that any such use of TI products which TI has not designated as military-grade is solely at the Buyer's risk, and that they are solely responsible for compliance with all legal and regulatory requirements in connection with such use.

TI products are neither designed nor intended for use in automotive applications or environments unless the specific TI products are designated by TI as compliant with ISO/TS 16949 requirements. Buyers acknowledge and agree that, if they use any non-designated products in automotive applications, TI will not be responsible for any failure to meet such requirements.

Following are URLs where you can obtain information on other Texas Instruments products and application solutions:

Products		**Applications**	
Audio	www.ti.com/audio	Communications and Telecom	www.ti.com/communications
Amplifiers	amplifier.ti.com	Computers and Peripherals	www.ti.com/computers
Data Converters	dataconverter.ti.com	Consumer Electronics	www.ti.com/consumer-apps
DLP® Products	www.dlp.com	Energy and Lighting	www.ti.com/energy
DSP	dsp.ti.com	Industrial	www.ti.com/industrial
Clocks and Timers	www.ti.com/clocks	Medical	www.ti.com/medical
Interface	interface.ti.com	Security	www.ti.com/security
Logic	logic.ti.com	Space, Avionics and Defense	www.ti.com/space-avionics-defense
Power Mgmt	power.ti.com	Transportation and Automotive	www.ti.com/automotive
Microcontrollers	microcontroller.ti.com	Video and Imaging	www.ti.com/video
RFID	www.ti-rfid.com	Wireless	www.ti.com/wireless-apps
RF/IF and ZigBee® Solutions	www.ti.com/lprf		
	TI E2E Community Home Page		e2e.ti.com

Mailing Address: Texas Instruments, Post Office Box 655303, Dallas, Texas 75265
Copyright © 2011, Texas Instruments Incorporated