BQ32002 Real-Time Clock (RTC)

1 Features

- Automatic Switchover to Backup Supply
- I^2C Interface Supports Serial Clock up to 400 kHz
- Uses 32.768-kHz Crystal With –63-ppm to +126-ppm Adjustment
- Integrated Oscillator-Fail Detection
- 8-Pin SOIC Package
- –40°C to +85°C Ambient Operating Temperature

2 Applications

General Consumer Electronics

3 Description

The BQ32002 device is a compatible replacement for industry standard real-time clocks.

The BQ32002 features an automatic backup supply that can be implemented using a capacitor or non-rechargeable battery. The BQ32002 has a programmable calibration adjustment from –63 ppm to +126 ppm. The BQ32002 registers include an OF (oscillator fail) flag indicating the status of the RTC oscillator, as well as a STOP bit that allows the host processor to disable the oscillator. The time registers are normally updated once per second, and all the registers are updated at the same time to prevent a timekeeping glitch. The BQ32002 includes automatic leap-year compensation.

Device Information(1)

PART NUMBER	PACKAGE	BODY SIZE (NOM)
BQ32002	SOIC (8)	4.90 mm × 3.91 mm

(1) For all available packages, see the orderable addendum at the end of the data sheet.

Application Circuit

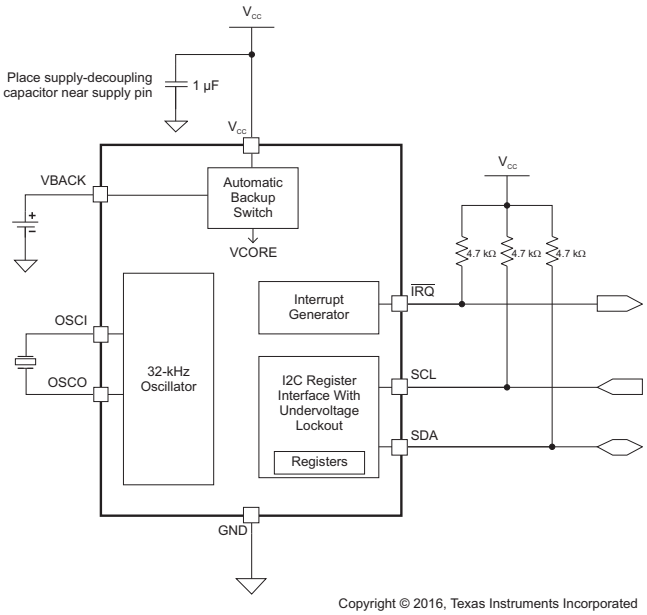

Copyright © 2016, Texas Instruments Incorporated

NOTE: All pullup resistors should be connected to V_{CC} such that no pullup is applied during backup supply operation.

Simplified Schematic

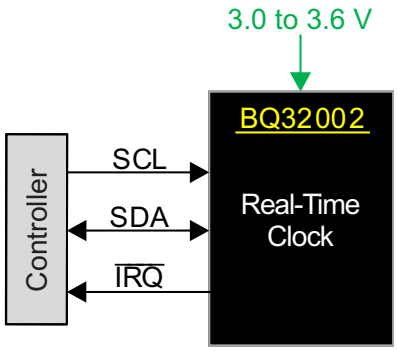

Copyright © 2016, Texas Instruments Incorporated

An IMPORTANT NOTICE at the end of this data sheet addresses availability, warranty, changes, use in safety-critical applications, intellectual property matters and other important disclaimers. PRODUCTION DATA.

Table of Contents

1 Features ... 1
2 Applications ... 1
3 Description ... 1
4 Revision History ... 2
5 Pin Configuration and Functions ... 3
6 Specifications ... 4
6.1 Absolute Maximum Ratings ... 4
6.2 ESD Ratings ... 4
6.3 Recommended Operating Conditions ... 4
6.4 Thermal Information ... 4
6.5 Electrical Characteristics ... 5
6.6 Timing Requirements ... 6
6.7 Typical Characteristics ... 6
7 Detailed Description ... 7
7.1 Overview ... 7
7.2 Functional Block Diagram ... 7
7.3 Feature Description ... 7
7.4 Device Functional Modes ... 10
7.5 Programming ... 10
7.6 Register Maps ... 12
8 Application and Implementation ... 19
8.1 Application Information ... 19
8.2 Typical Application ... 19
9 Power Supply Recommendations ... 21
10 Layout ... 21
10.1 Layout Guidelines ... 21
10.2 Layout Example ... 21
11 Device and Documentation Support ... 22
11.1 Community Resources ... 22
11.2 Trademarks ... 22
11.3 Electrostatic Discharge Caution ... 22
11.4 Glossary ... 22
12 Mechanical, Packaging, and Orderable Information ... 22

4 Revision History

Changes from Revision A (December 2010) to Revision B **Page**

- Added *Pin Configuration and Functions* section, *ESD Ratings* section, *Thermal Information* section, *Detailed Description* section, *Device and Documentation Support* section, and *Mechanical, Packaging, and Orderable Information* section ... 1
- Deleted Trickle Charge Pump from Functional Block Diagram/Application Circuit ... 1
- Changed Crystal series resistance maximum from 40 kΩ to 70 kΩ in *Recommended Operating Conditions* ... 4
- Added *Recommended Operating Conditions* table note (1) Crystal load capacitance ±10% is allowed. ... 4

Copyright © 2010–2016, Texas Instruments Incorporated

5 Pin Configuration and Functions

D Package
8-Pin SOIC
Top View

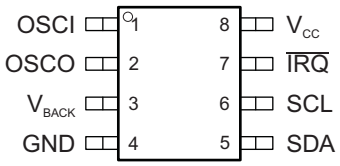

Pin Functions

PIN		TYPE	DESCRIPTION
NAME	NO.		
POWER AND GROUND			
V_{CC}	8	—	Main device power
GND	4	—	Ground
V_{BACK}	3	—	Backup device power
SERIAL INTERFACE			
SCL	6	I	I^2C serial interface clock
SDA	5	I/O	I^2C serial data
INTERRUPT			
$\overline{IRQ}$	7	O	Configurable interrupt output. Open-drain output.
OSCILLATOR			
OSCI	1	—	Oscillator input
OSCO	2	—	Oscillator output

Copyright © 2010–2016, Texas Instruments Incorporated

6 Specifications

6.1 Absolute Maximum Ratings(1)

over operating free-air temperature range (unless otherwise noted)

			MIN	MAX	UNIT
V_{IN}	Input voltage	V_{CC} to GND	–0.3	4	V
		All other pins to GND	–0.3	V_{CC} + 0.3	
T_J	Operating junction temperature		–40	150	°C
T_{stg}	Storage temperature after reflow		–60	150	°C

(1) Stresses beyond those listed under *Absolute Maximum Ratings* may cause permanent damage to the device. These are stress ratings only, which do not imply functional operation of the device at these or any other conditions beyond those indicated under *Recommended Operating Conditions*. Exposure to absolute-maximum-rated conditions for extended periods may affect device reliability.

6.2 ESD Ratings

			VALUE	UNIT
$V_{(ESD)}$	Electrostatic discharge	Human-body model (HBM), per ANSI/ESDA/JEDEC JS-001(1)	2000	V
		Charged-device model (CDM), per JEDEC specification JESD22-C101(2)	500	

(1) JEDEC document JEP155 states that 500-V HBM allows safe manufacturing with a standard ESD control process.
(2) JEDEC document JEP157 states that 250-V CDM allows safe manufacturing with a standard ESD control process.

6.3 Recommended Operating Conditions

		MIN	NOM	MAX	UNIT
V_{CC}	Supply voltage, V_{CC} to GND	3		3.6	V
T_A	Operating free-air temperature	–40		85	°C
f_o	Crystal resonant frequency		32.768		kHz
R_S	Crystal series resistance			70	kΩ
C_L	Crystal load capacitance(1)		12		pF

(1) Crystal load capacitance ±10% is allowed.

6.4 Thermal Information

THERMAL METRIC(1)		BQ32002 D (SOIC) 8 PINS	UNIT
$R_{\theta JA}$	Junction-to-ambient thermal resistance	114.8	°C/W
$R_{\theta JC(top)}$	Junction-to-case (top) thermal resistance	59.1	°C/W
$R_{\theta JB}$	Junction-to-board thermal resistance	55.5	°C/W
ψ_{JT}	Junction-to-top characterization parameter	11.9	°C/W
ψ_{JB}	Junction-to-board characterization parameter	55	°C/W

(1) For more information about traditional and new thermal metrics, see the *Semiconductor and IC Package Thermal Metrics* application report, SPRA953.

Copyright © 2010–2016, Texas Instruments Incorporated

6.5 Electrical Characteristics

over operating free-air temperature range (unless otherwise noted)

PARAMETER		TEST CONDITION	MIN	TYP	MAX	UNIT
POWER SUPPLY						
I_{CC}	V_{CC} supply current			65	200	µA
V_{BACK}	Backup supply voltage	Operating	1.4		V_{CC}	V
		Switchover	2		V_{CC}	
I_{BACK}	Backup supply current	V_{CC} = 0 V, V_{BAT} = 3 V, Oscillator on, T_A = 25°C		0.9(1)	1.5	µA
V_{SO}	Switchover voltage	Operating → Backup		1.8		V
		Backup → Operating		2.4		
LOGIC LEVEL INPUTS						
V_{IL}	Input low voltage				0.3 × V_{CC}	V
V_{IH}	Input high voltage		0.7 × V_{CC}			V
I_{IN}	Input current	0 V ≤ V_{IN} ≤ V_{CC}	–1		1	µA
LOGIC LEVEL OUTPUTS						
V_{OL}	Output low voltage	I_{OL} = 3 mA			0.4	V
I_L	Leakage current		–1		1	µA
REAL-TIME CLOCK CHARACTERISTICS						
	Pre-calibration accuracy	V_{CC} = 3.3 V, V_{BAT} = 3 V, Oscillator on, T_A = 25°C		±35(2)		ppm

(1) The backup supply current is measured only after an initial power up. The device behavior is not ensured before the first power up.
(2) Typical accuracy is measured using reference board design and KDS DMX-26S surface-mount 32.768-kHz crystal. Variation in board design and crystal section results in different typical accuracy.

Copyright © 2010–2016, Texas Instruments Incorporated

6.6 Timing Requirements

PARAMETER		STANDARD MODE			FAST MODE			UNIT
		MIN	NOM	MAX	MIN	NOM	MAX	
f_{scl}	I^2C clock frequency	0		100	0		400	kHz
t_{sch}	I^2C clock high time	4			0.6			µs
t_{scl}	I^2C clock low time	4.7			1.3			µs
t_{sp}	I^2C spike time	0		50	0		50	ns
t_{sds}	I^2C serial data setup time	250			100			ns
t_{sdh}	I^2C serial data hold time	0			0			ns
t_{icr}	I^2C input rise time			1000	20 + 0.1C_b (1)		300	ns
t_{icf}	I^2C input fall time			300	20 + 0.1C_b (1)		300	ns
t_{ocf}	I^2C output fall time			300	20 + 0.1C_b (1)		300	µs
t_{buf}	I^2C bus free time	4.7			1.3			µs
t_{sts}	I^2C Start setup time	4.7			0.6			µs
t_{sth}	I^2C Start hold time	4			0.6			µs
t_{sps}	I^2C Stop setup time	4			0.6			µs
$t_{vd\ (data)}$	Valid data time (SCL low to SDA valid)			1			1	µs
$t_{vd\ (ack)}$	Valid data time of ACK (ACK signal from SCL low to SDA low)			1			1	µs

(1) C_b = total capacitance of one bus line in pF

6.7 Typical Characteristics

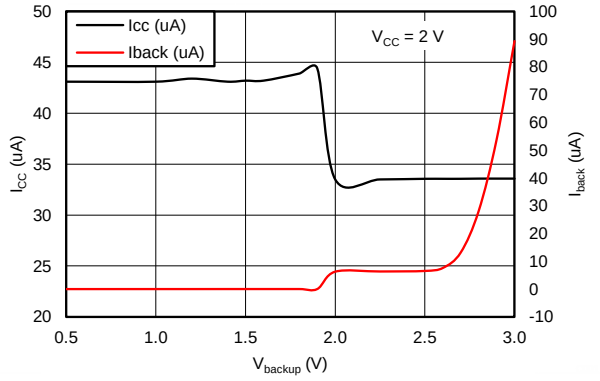

Figure 1. Current Consumption vs Backup Supply Voltage

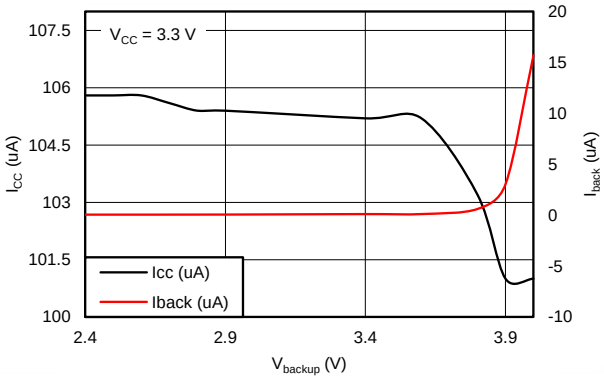

Figure 2. Current Consumption vs Backup Supply Voltage

Copyright © 2010–2016, Texas Instruments Incorporated

7 Detailed Description

7.1 Overview

The BQ32002 is a real-time clock that features an automatic backup supply with integrated oscillator-fail detection.

7.2 Functional Block Diagram

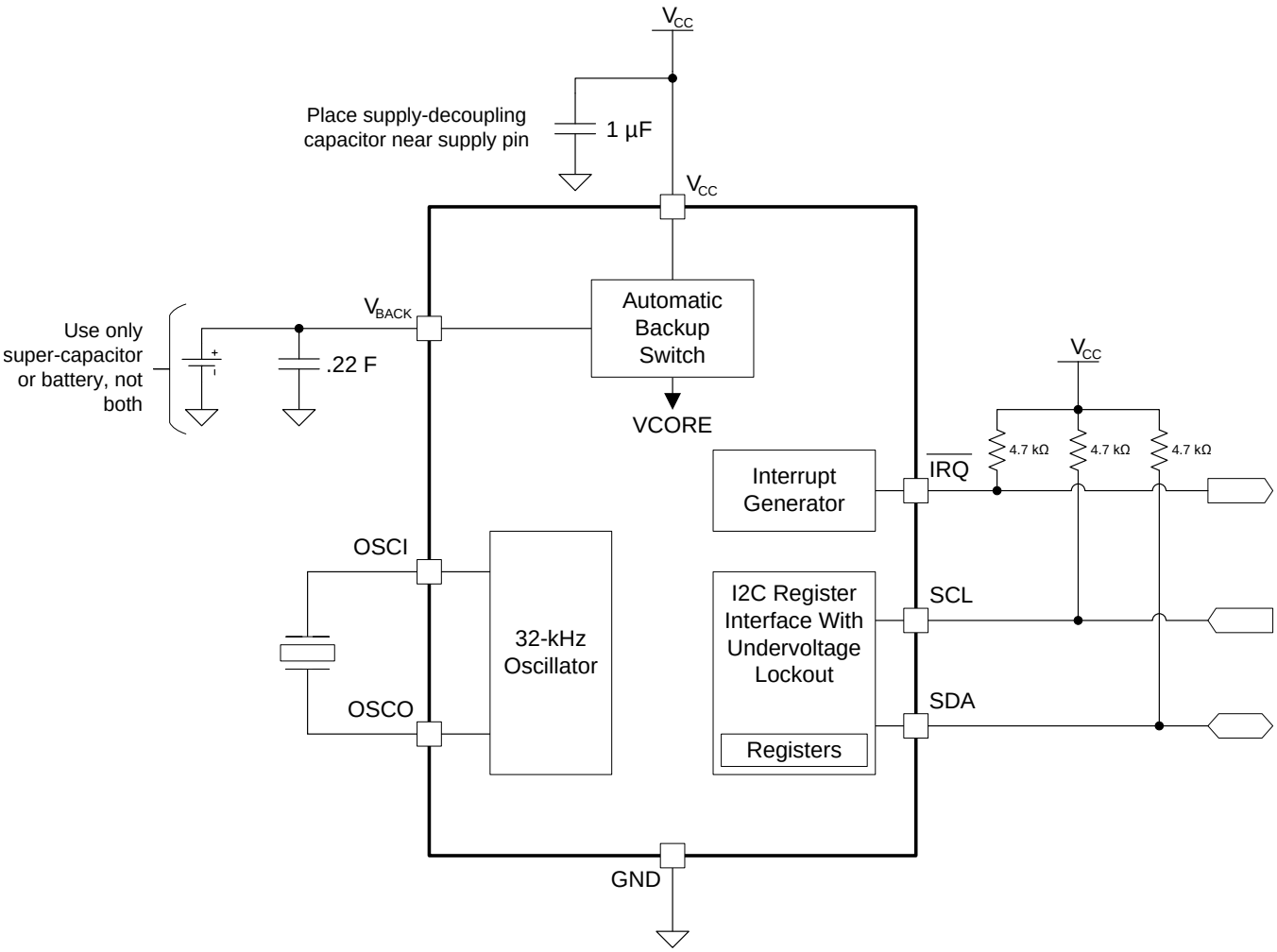

Copyright © 2016, Texas Instruments Incorporated

NOTE: All pullup resistors should be connected to V_{CC} such that no pullup is applied during backup supply operation.

7.3 Feature Description

7.3.1 $\overline{IRQ}$ Function

The $\overline{IRQ}$ pin of the BQ32002 functions as a general-purpose output or a frequency test output. The function of $\overline{IRQ}$ is configurable in the device register space by setting the FT, FTF, and OUT bits. On initial power cycles, the OUT bit is set to one, and the FTF and FT bits are set to zero. On subsequent power-ups, with backup supply present, the OUT bit remains unchanged, and the FTF and FT bits are set to zero. When operating on backup supply, the $\overline{IRQ}$ pin function is unused. $\overline{IRQ}$ pullup resistor must be tied to V_{CC} to prevent $\overline{IRQ}$ operation when operating on backup supply. The effect of the calibration logic is not normally observable when $\overline{IRQ}$ is configured to output 1 Hz. The calibration logic functions by periodically adjusting the width of the 1-Hz clock. The calibration effect is observable only every eight or sixteen minutes, depending on the sign of the calibration.

Feature Description (continued)

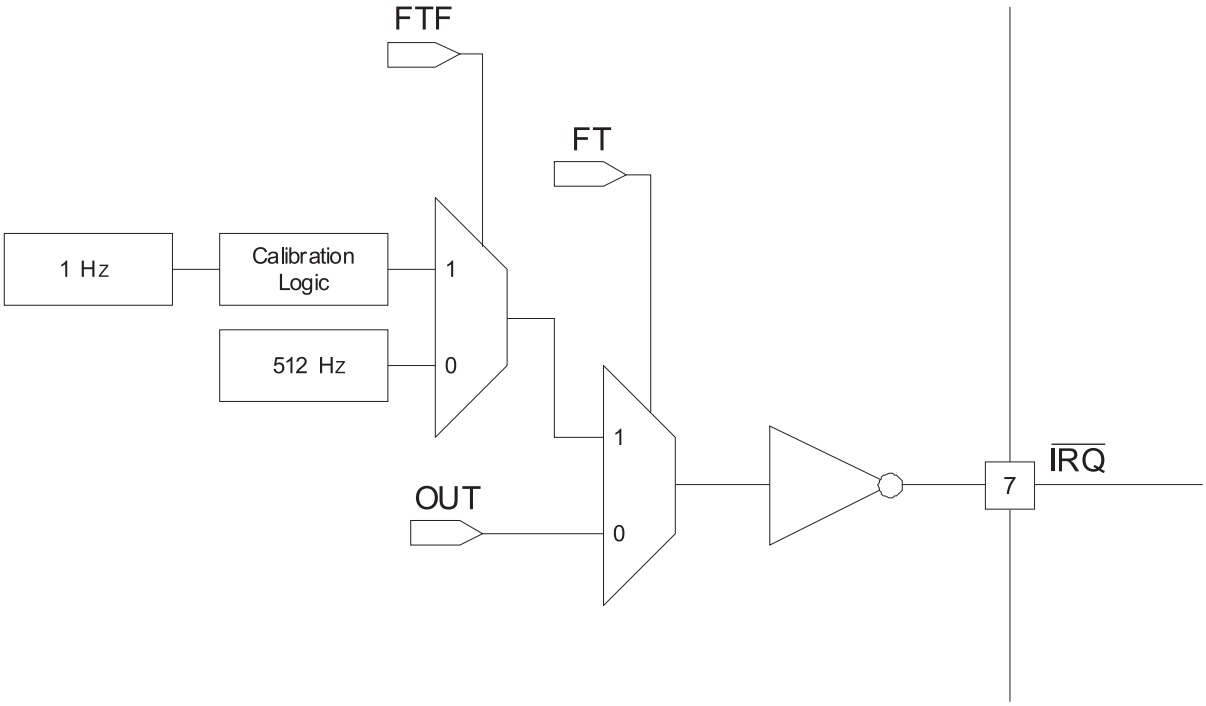

Figure 3. $\overline{\text{IRQ}}$ Pin Functional Diagram

Table 1. $\overline{\text{IRQ}}$ Function

FT	OUT	FTF	$\overline{\text{IRQ}}$ STATE
1	X	1	1 Hz
1	X	0	512 Hz
0	1	X	1
0	0	X	0

Copyright © 2010–2016, Texas Instruments Incorporated

7.3.2 V_{BACK} Switchover

The BQ32002 has an internal switchover circuit that causes the device to switch from main power supply to backup power supply when the voltage of the main supply pin V_{CC} drops below a minimum threshold. The V_{BACK} switchover circuit uses an internal reference voltage V_{REF} derived from the on-chip bandgap reference; V_{REF} is approximately 1.8 V. The device switches to the V_{BACK} supply when V_{CC} is less than the lesser of V_{BACK} or V_{REF}. Similarly, the device switches to the V_{CC} supply when V_{CC} is greater than either V_{BACK} or V_{REF}.

Some registers are reset to default values when the RTC switches from main power supply to backup power supply. See the register definitions to determine what register bits are effected by a backup switchover (effected bits have their reset value (1/0) shown for *Cycle*, bits that are unchanged by backup are marked *UC*).

The time-keeping registers can take up to 1 second to update after the RTC switches from backup power supply to main power supply.

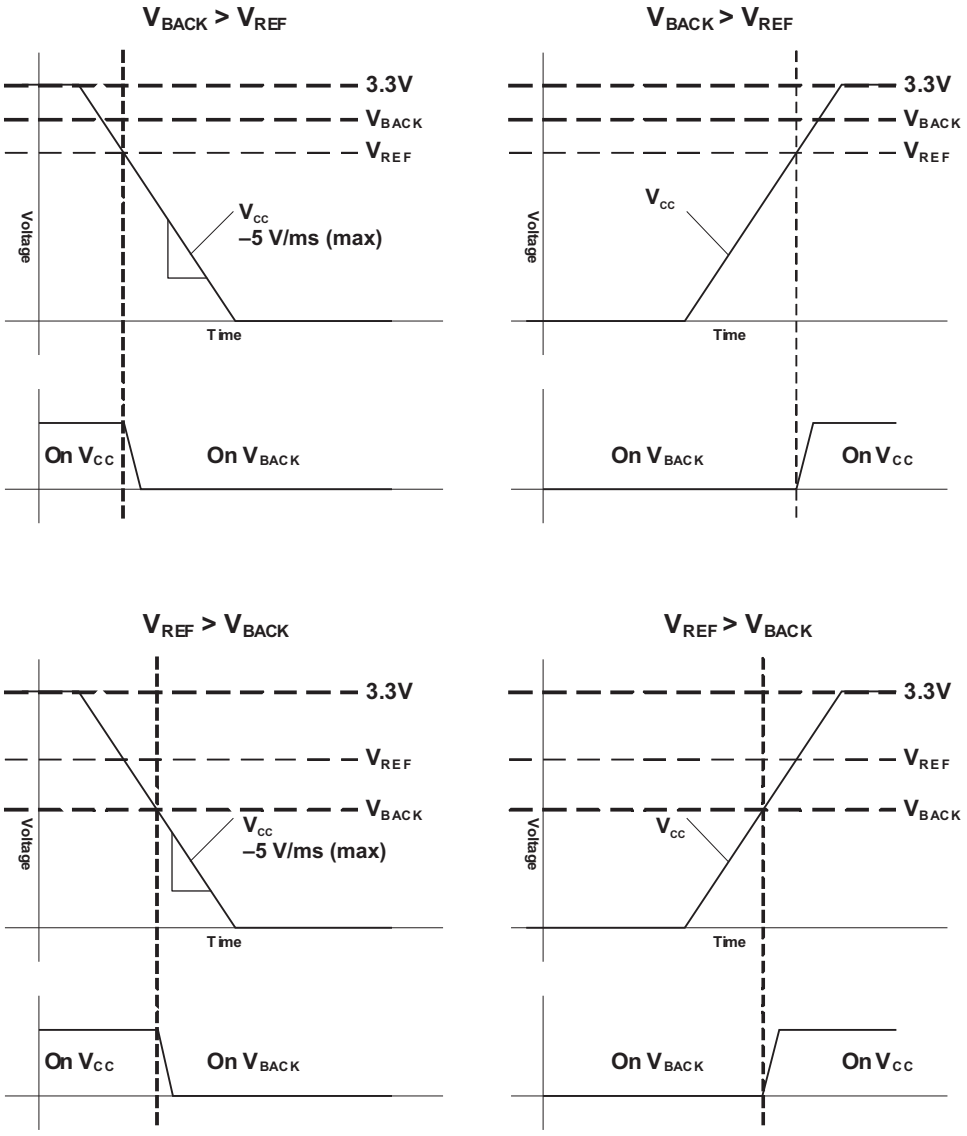

Figure 4. Switchover Diagram

Copyright © 2010–2016, Texas Instruments Incorporated

7.4 Device Functional Modes

When the device switches from the main power supply to backup supply, the time-keeping registers [0- 9] cannot be accessed through the I^2C. The access to these registers are only when $V_{CC} > V_{REF}$. The time-keeping registers can take up to 1 second to update after the device switches from backup power supply to main power supply.

7.5 Programming

7.5.1 I^2C Serial Interface

The I^2C interface allows control and monitoring of the RTC by a microcontroller. I^2C is a two-wire serial interface developed by Philips Semiconductor (see I^2C-Bus Specification, Version 2.1, January 2000).

The bus consists of a data line (SDA) and a clock line (SCL) with off-chip pullup resistors. When the bus is idle, both SDA and SCL lines are pulled high.

A master device, usually a microcontroller or a digital signal processor, controls the bus. The master is responsible for generating the SCL signal and device addresses. The master also generates specific conditions that indicate the START and STOP of data transfer.

A slave device receives and/or transmits data on the bus under control of the master device. This device operates only as a slave device.

I^2C communication is initiated by a master sending a start condition, a high-to-low transition on the SDA I/O while SCL is held high. After the start condition, the device address byte is sent, most-significant bit (MSB) first, including the data direction bit (R/$\overline{W}$). After receiving a valid address byte, this device responds with an acknowledge, a low on the SDA I/O during the high of the acknowledge-related clock pulse. This device responds to the I^2C slave address 11010000b for write commands and slave address 11010001b for read commands.

This device does not respond to the general call address.

A data byte follows the address acknowledge. If the R/$\overline{W}$ bit is low, the data is written from the master. If the R/$\overline{W}$ bit is high, the data from this device are the values read from the register previously selected by a write to the subaddress register. The data byte is followed by an acknowledge sent from this device. Data is output only if complete bytes are received and acknowledged.

A stop condition, which is a low-to-high transition on the SDA I/O while the SCL input is high, is sent by the master to terminate the transfer. A master device must wait at least 60 µs after the RTC exits backup mode to generate a START condition.

Copyright © 2010–2016, Texas Instruments Incorporated

Programming (continued)

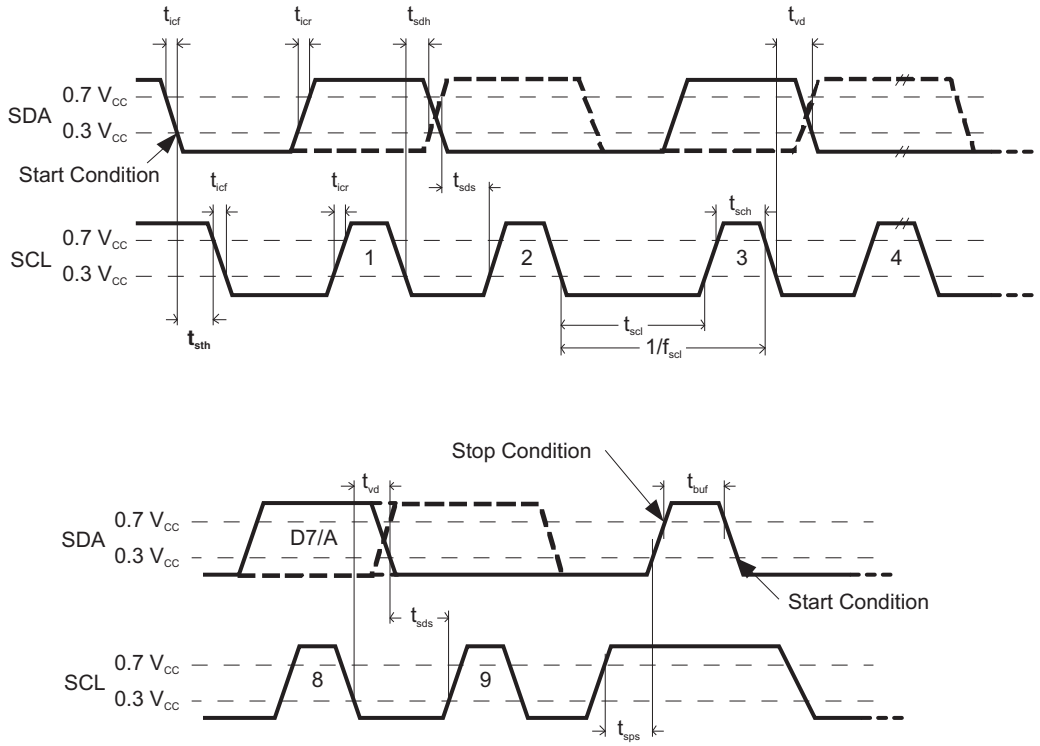

Figure 5. I²C Timing Diagram

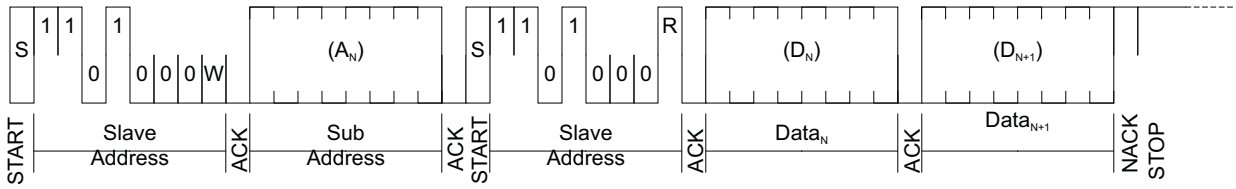

Figure 6. I²C Read Mode

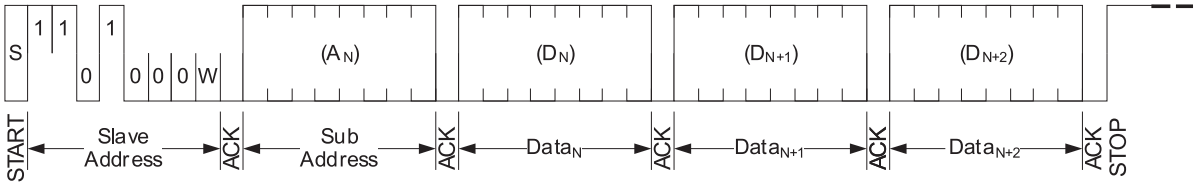

Figure 7. I²C Write Mode

7.6 Register Maps

Table 2. Normal Registers

REGISTER	ADDRESS (HEX)	REGISTER NAME	DESCRIPTION
0	0x00	SECONDS	Clock seconds and STOP bit
1	0x01	MINUTES	Clock minutes
2	0x02	CENT_HOURS	Clock hours, century, and CENT_EN bit
3	0x03	DAY	Clock day
4	0x04	DATE	Clock date
5	0x05	MONTH	Clock month
6	0x06	YEARS	Clock years
7	0x07	CAL_CFG1	Calibration and configuration
9	0x09	CFG2	Configuration 2

Table 3. Special Function Registers

REGISTER	ADDRESS (HEX)	REGISTER NAME	DESCRIPTION
32	0x20	SF KEY 1	Special function key 1
33	0x21	SF KEY 2	Special function key 2
34	0x22	SFR	Special function register

7.6.1 I^2C Read After Backup Mode

The time-keeping registers can take up to 1 second to update after the RTC switches from backup power supply to main power supply. An I^2C read of the RTC that starts before the update has completed will return the time when the RTC enters backup mode. To ensure that the correct time is read after backup mode, the host should wait longer than 1 second after the main supply is greater than 2.8 V and V_{BACK}.

Copyright © 2010–2016, Texas Instruments Incorporated

7.6.2 Normal Register Descriptions

Table 4. SECONDS Register

Address 0x00
Name SECONDS
Initial Value 0XXXXXXb
Description Clock seconds and STOP bit

D7	D6	D5	D4	D3	D2	D1	D0	BIT(S)
STOP	10_SECOND			1_SECOND				Name
r/w	r/w			r/w				Read/Write
0	X	X	X	X	X	X	X	Initial
UC	UC	UC	UC	UC	UC	UC	UC	Cycle

STOP — Oscillator stop. The STOP bit is used to force the oscillator to stop oscillating. STOP is set to 0 on initial application of power, on all subsequent power cycles STOP remains unchanged. On initial power application STOP can be written to 1 and then written to 0 to force start the oscillator.

0 Normal

1 Stop

10_SECOND — BCD of tens of seconds. The 10_SECOND bits are the BCD representation of the number of tens of seconds on the clock. Valid values are 0 to 5. If invalid data is written to 10_SECOND, the clock will update with invalid data in 10_SECOND until the counter rolls over; thereafter, the data in 10_SECOND is valid. Time keeping registers can take up to 1 second to update after the RTC switches from backup power supply to main power supply.

1_SECOND — BCD of seconds. The 1_SECOND bits are the BCD representation of the number of seconds on the clock. Valid values are 0 to 9. If invalid data is written to 1_SECOND, the clock will update with invalid data in 1_SECOND until the counter rolls over; thereafter, the data in 1_SECOND is valid. Time keeping registers can take up to 1 second to update after the RTC switches from backup power supply to main power supply.

Table 5. MINUTES Register

Address 0x01
Name MINUTES
Initial Value 1XXXXXXb
Description Clock minutes

D7	D6	D5	D4	D3	D2	D1	D0	BIT(S)
OF	10_MINUTE			1_MINUTE				Name
r/w	r/w			r/w				Read/Write
1	X	X	X	X	X	X	X	Initial
0	UC	UC	UC	UC	UC	UC	UC	Cycle

OF — Oscillator fail flag. The OF bit is a latched flag indicating when the 32.768-kHz oscillator has dropped at least four consecutive pulses. The OF flag is always set on initial power-up, and it can be cleared through the serial interface. When OF is 0, no oscillator failure has been detected. When OF is 1, the oscillator fail detect circuit has detected at least four consecutive dropped pulses.

0 No failure detected

1 Failure detected

10_MINUTE — BCD of tens of minutes. The 10_MINUTE bits are the BCD representation of the number of tens of minutes on the clock. Valid values are 0 to 5. If invalid data is written to 10_MINUTE, the clock will update with invalid data in 10_MINUTE until the counter rolls over; thereafter, the data in 10_MINUTE is valid. Time keeping registers can take up to 1 second to update after the RTC switches from backup power supply to main power supply.

1_MINUTE — BCD of minutes. The 1_MINUTE bits are the BCD representation of the number of minutes on the clock. Valid values are 0 to 9. If invalid data is written to 1_MINUTE, the clock will update with invalid data in 1_MINUTE until the counter rolls over; thereafter, the data in 1_MINUTE is valid. Time keeping registers can take up to 1 second to update after the RTC switches from backup power supply to main power supply.

Copyright © 2010–2016, Texas Instruments Incorporated

Table 6. CENT_HOURS Register

Address 0x02
Name CENT_HOURS
Initial Value XXXXXXXXb
Description Clock hours, century, and CENT_EN bit

D7	D6	D5	D4	D3	D2	D1	D0	BIT(S)
CENT_EN	CENT	10_HOUR		1_HOUR				Name
r/w	r/w	r/w		r/w				Read/Write
X	X	X	X	X	X	X	X	Initial
UC	UC	UC	UC	UC	UC	UC	UC	Cycle

CENT_EN Century enable. The CENT_EN bit enables the century timekeeping feature. If CENT_EN is set to 1, then the clock tracks the century using the CENT bit. If CENT_EN is set to 0, the clock ignores the CENT bit.

0 Century disabled

1 Century enabled

CENT Century. The CENT bit tracks the century when century timekeeping is enabled. The clock toggles the CENT bit when the year count rolls from 99 to 00. Because the clock compliments the CENT bit, the user can define the meaning of CENT (1 for current century and 0 for next century, or 0 for current century and 1 for next century).

10_HOUR BCD of tens of hours (24-hour format). The 10_HOUR bits are the BCD representation of the number of tens of hours on the clock, in 24-hour format. Valid values are 0 to 2. If invalid data is written to 10_HOUR, the clock will update with invalid data in 10_HOUR until the counter rolls over; thereafter, the data in 10_HOUR is valid. Time keeping registers can take up to 1 second to update after the RTC switches from backup power supply to main power supply.

1_HOUR BCD of hours (24-hour format). The 1_HOUR bits are the BCD representation of the number of hours on the clock, in 24-hour format. Valid values are 0 to 9. If invalid data is written to 1_HOUR, the clock will update with invalid data in 1_HOUR until the counter rolls over; thereafter, the data in 1_HOUR is valid. Time keeping registers can take up to 1 second to update after the RTC switches from backup power supply to main power supply.

Table 7. DAY Register

Address 0x03
Name DAY
Initial Value 00000XXXb
Description Clock day

D7	D6	D5	D4	D3	D2	D1	D0	BIT(S)
RSVD					DAY			Name
r/w					r/w			Read/Write
0	0	0	0	0	X	X	X	Initial
0	0	0	0	0	UC	UC	UC	Cycle

RSVD Reserved. The RSVD bits should always be written as 0.

DAY BCD of the day of the week. The DAY bits are the BCD representation of the day of the week. Valid values are 1 to 7 and represent the days from Sunday to Saturday. DAY updates if set to 0 until the counter rolls over; thereafter, the data in DAY is valid. Time keeping registers can take up to 1 second to update after the RTC switches from backup power supply to main power supply.

1 Sunday

2 Monday

3 Tuesday

4 Wednesday

5 Thursday

6 Friday

7 Saturday

Copyright © 2010–2016, Texas Instruments Incorporated

Table 8. DATE Register

Address 0x04
Name DATE
Initial Value 00XXXXXXb
Description Clock date

D7	D6	D5	D4	D3	D2	D1	D0	BIT(S)
RSVD		10_DATE		1_DATE				Name
r/w		r/w		r/w				Read/Write
0	0	X	X	X	X	X	X	Initial
0	0	UC	UC	UC	UC	UC	UC	Cycle

RSVD Reserved. The RSVD bits should always be written as 0.

10_DATE BCD of tens of date. The 10_DATE bits are the BCD representation of the tens of date on the clock. Valid values are 0 to 3(1). If invalid data is written to 10_DATE, the clock will update with invalid data in 10_DATE until the counter rolls over; thereafter, the data in 10_DATE is valid. Time keeping registers can take up to 1 second to update after the RTC switches from backup power supply to main power supply.

1_DATE BCD of date. The 1_DATE bits are the BCD representation of the date on the clock. Valid values are 0 to 9(1). If invalid data is written to 1_DATE, the clock will update with invalid data in 1_DATE until the counter rolls over; thereafter, the data in 1_DATE is valid. Time keeping registers can take up to 1 second to update after the RTC switches from backup power supply to main power supply.

(1) 10_DATE and 1_DATE must form a valid date, 01 to 31, dependent on month and year.

Table 9. MONTH Register

Address 0x05
Name MONTH
Initial Value 000XXXXXb
Description Clock month

D7	D6	D5	D4	D3	D2	D1	D0	BIT(S)
RSVD			10_MONTH	1_MONTH				Name
r/w			r/w	r/w				Read/Write
0	0	0	X	X	X	X	X	Initial
0	0	0	UC	UC	UC	UC	UC	Cycle

RSVD Reserved. The RSVD bits should always be written as 0.

10_MONTH BCD of tens of month. The 10_MONTH bits are the BCD representation of the tens of month on the clock. Valid values are 0 to 1(1). If invalid data is written to 10_MONTH, the clock will update with invalid data in 10_MONTH until the counter rolls over; thereafter, the data in 10_MONTH is valid.

1_MONTH BCD of month. The 1_MONTH bits are the BCD representation of the month on the clock. Valid values are 0 to 9(1). If invalid data is written to 1_MONTH, the clock will update with invalid data in 1_MONTH until the counter rolls over; thereafter, the data in 1_MONTH is valid.

(1) 10_MONTH and 1_MONTH must form a valid date, 01 to 12.

Copyright © 2010–2016, Texas Instruments Incorporated

Table 10. YEARS Register

Address 0x06
Name YEARS
Initial Value XXXXXXXXb
Description Clock year

D7	D6	D5	D4	D3	D2	D1	D0	BIT(S)
10_YEAR				1_YEAR				Name
r/w				r/w				Read/Write
X	X	X	X	X	X	X	X	Initial
UC	UC	UC	UC	UC	UC	UC	UC	Cycle

10_YEAR BCD of tens of years. The 10_YEAR bits are the BCD representation of the tens of years on the clock. Valid values are 0 to 9. If invalid data is written to 10_YEAR, the clock will update with invalid data in 10_YEAR until the counter rolls over; thereafter, the data in 10_YEAR is valid. Time keeping registers can take up to 1 second to update after the RTC switches from backup power supply to main power supply.

1_YEAR BCD of year. The 1_YEAR bits are the BCD representation of the years on the clock. Valid values are 0 to 9. If invalid data is written to 1_YEAR, the clock will update with invalid data in 1_YEAR until the counter rolls over; thereafter, the data in 1_YEAR is valid. Time keeping registers can take up to 1 second to update after the RTC switches from backup power supply to main power supply.

Table 11. CAL_CFG1 Register

Address 0x07
Name CAL_CFG1
Initial Value 10000000b
Description Calibration and control

D7	D6	D5	D4	D3	D2	D1	D0	BIT(S)
OUT	FT	S	CAL					Name
r/w	r/w	r/w	r/w					Read/Write
1	0	0	0	0	0	0	0	Initial
UC	UC	UC	UC	UC	UC	UC	UC	Cycle

OUT Logic output, when FT = 0. When FT is zero, the logic output of $\overline{IRQ}$ pin reflects the value of OUT.
0 $\overline{IRQ}$ is logic 0
1 $\overline{IRQ}$ is logic 1

FT Frequency test. The FT bit is used to enable the frequency test signal on the $\overline{IRQ}$ pin. When FT is 1, a square wave is produced on the $\overline{IRQ}$ pin. The FTF bit in the SFR register determines the frequency of the test signal.
0 Disable
1 Enable

S Calibration sign. The S bit determines the polarity of the calibration applied to the oscillator. If S is 0, then the calibration slows the RTC. If S is 1, then the calibration speeds the RTC.
0 Slowing (+)
1 Speeding (–)

CAL Calibration. The CAL bits along with S determine the calibration amount as shown in Table 12.

Table 12. Calibration

CAL (DEC)	S = 0	S = 1
0	+0 ppm	–0 ppm
1	+2 ppm	–4 ppm
N	+N / 491520 (per minute)	–N / 245760 (per minute)
30	+61 ppm	–122 ppm
31	+63 ppm	–126 ppm

Copyright © 2010–2016, Texas Instruments Incorporated

Table 13. CFG2 Register

Address 0x09
Name CFG2
Initial Value 10101010b
Description Configuration 2

D7	D6	D5	D4	D3	D2	D1	D0	BIT(S)
RSVD	RSVD	RSVD		RSVD				Name
r/w	r/w	r/w		r/w				Read/Write
1	0	1	0	1	0	1	0	Initial
1	0	UC	UC	1	0	1	0	Cycle

RSVD Reserved. The RSVD bits should always be written as 0.

7.6.3 Special Function Registers

Table 14. SF KEY 1 Register

Address 0x20
Name SF KEY 1
Initial Value 00000000b
Description Special function key 1

D7	D6	D5	D4	D3	D2	D1	D0	BIT(S)
SF KEY B1								Name
r/w								Read/Write
0	0	0	0	0	0	0	0	Initial
0	0	0	0	0	0	0	0	Cycle

SF KEY B1 Special function access key byte 1. Reads as 0x00, and key is 0x5E.

The SF KEY 1 and SF KEY 2 registers are used to enable access to the main special function register (SFR). Access to SFR is granted only after the special function keys are written sequentially to SF KEY 1 and SF KEY 2. Each write to the SFR must be preceded by writing the SF keys to the SF key registers, in order, SF KEY 1 then SF KEY 2.

Copyright © 2010–2016, Texas Instruments Incorporated

Table 15. SF KEY 2 Register

Address 0x21
Name SF KEY 2
Initial Value 00000000b
Description Special function key 2

D7	D6	D5	D4	D3	D2	D1	D0	BIT(S)
SF KEY 2								Name
r/w								Read/Write
0	0	0	0	0	0	0	0	Initial
0	0	0	0	0	0	0	0	Cycle

SF KEY 2 Special function access key byte 2. Reads as 0x00, and key is 0xC7.

The SF KEY 1 and SF KEY 2 registers are used to enable access to the main special function register (SFR). Access to SFR is granted only after the special function keys are written sequentially to SF KEY 1 and SF KEY 2. Each write to the SFR must be preceded by writing the SF keys to the SF key registers, in order, SF KEY 1 then SF KEY 2.

Table 16. SFR Register

Address 0x22
Name SFR
Initial Value 00000000b
Description Special function register 1

D7	D6	D5	D4	D3	D2	D1	D0	BIT(S)
RSVD							FTF	Name
r/w							r/w	Read/Write
0	0	0	0	0	0	0	0	Initial
0	0	0	0	0	0	0	0	Cycle

RSVD Reserved. The RSVD bits should always be written as 0.

FTF Force calibration to 1 Hz. FTF allows the frequency of the calibration output to be changed from 512 Hz to 1 Hz. By default, FTF is cleared, and the RTC outputs a 512-Hz calibration signal. Setting FTF forces the calibration signal to 1 Hz, and the calibration tracks the internal ppm adjustment. Note: The default 512-Hz calibration signal does not include the effect of the ppm adjustment.

0 Normal 512-Hz calibration

1 1-Hz calibration

Copyright © 2010–2016, Texas Instruments Incorporated

8 Application and Implementation

NOTE

Information in the following applications sections is not part of the TI component specification, and TI does not warrant its accuracy or completeness. TI's customers are responsible for determining suitability of components for their purposes. Customers should validate and test their design implementation to confirm system functionality.

8.1 Application Information

The typical application for the BQ32002 is to provide precise time and date to a system. The backup power supply provides additional reliability by automatically switching over from the main supply when it drops under the voltage threshold.

8.2 Typical Application

The following design is a common application of the BQ32002.

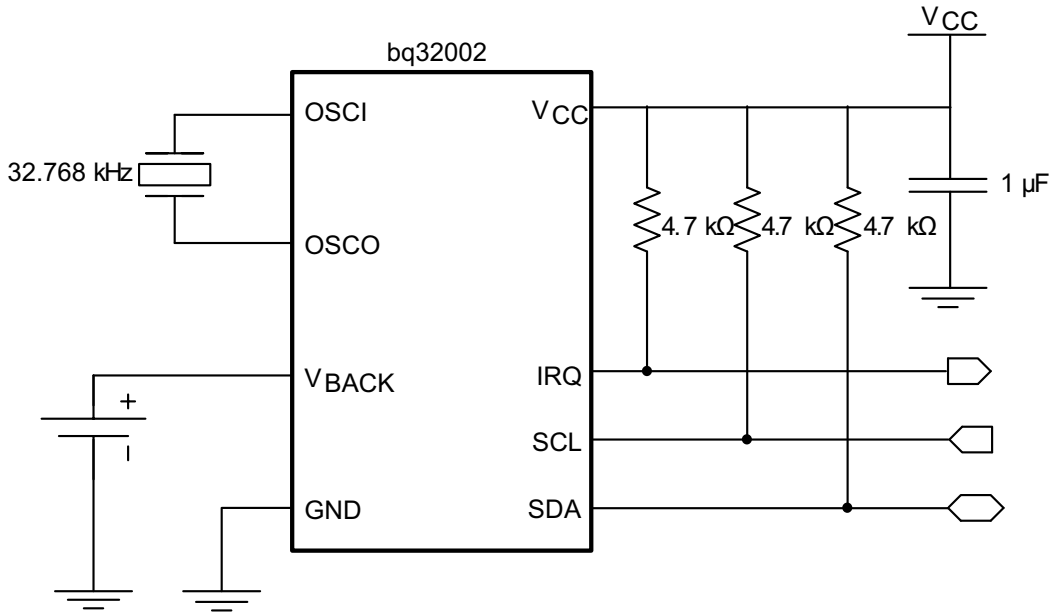

Copyright © 2016, Texas Instruments Incorporated

Figure 8. Typical Application Schematic

8.2.1 Design Requirements

Table 17 lists the parameters for this design example.

Table 17. Design Parameters

DESIGN PARAMETER	REFERENCE	EXAMPLE VALUE
Supply Voltage	V_{CC}	3.3 V
Backup Supply	V_{BACK}	BR1225
Crystal Oscillator	XT	32.768 kHz

8.2.2 Detailed Design Procedure

8.2.2.1 Reading From a Register

The report details the read-back of the SECONDS register. Figure 9 depicts the first condition that will be used as a benchmark to compare the values taken from the SECONDS register in the BQ32002, to the internal PC time of the oscilloscope. In this example two modes of operation are demonstrated.

Condition 1 The main power supply, V_{CC}, is greater than the backup power supply, V_{BACK}, and the internal reference voltage, V_{REF}. In this mode, the device's internal registers are fully operational with READ and WRITE access. Analyzing Figure 9, the known register values are compared to the system clock; in this case, the PC clock which is shown at the bottom of the screen capture.

The BQ32002 during this condition is reading back [101][0010]= [5][2], which corresponds to 52 seconds at PC time of 2:22:43 PM.

Condition 2 V_{CC} is now lowered to 2 V (V_{BACK} > V_{CC}). In this mode, the I^2C communications are halted. However, the internal time-keeping registers maintain full functional operation and accuracy which will be available to be reliably read by the controller 1 second after the RTC switches from V_{BACK} to V_{CC} supply.

Condition 3 During this final test condition, the RTC is restored to operate from the main power supply and I^2C communications are now fully functional.

Figure 10 demonstrates a read-back value from the SECONDS register of [100][0101]= [4][5], or 45 seconds at PC time of 2:23:36 PM. This proves that the BQ32002 managed to accurately maintain the time-keeping registers functional while the V_{CC} dropped below V_{BACK}.

8.2.2.2 Leap Year Compensation

The BQ32002 classifies a leap year as any year that is evenly divisible by 4. Using this rule allows for reliable leap year compensation until 2100. Years that fall outside this rule will need to be compensated for by the external controller.

8.2.2.3 Utilizing the Backup Supply

In order for the BQ32002 to achieve a low backup supply current as specified in the *Electrical Characteristics*, the V_{CC} pin must be initialized after every total power loss situation. Initialization Is achieved by powering on V_{CC} with a voltage between 3 to 3.6 V for at least 1 ms immediately after the backup supply is connected. If the V_{CC} is not powered on while connecting the backup supply, then the expected leakage current from V_{BACK} will be much greater than specified.

8.2.3 Application Curves

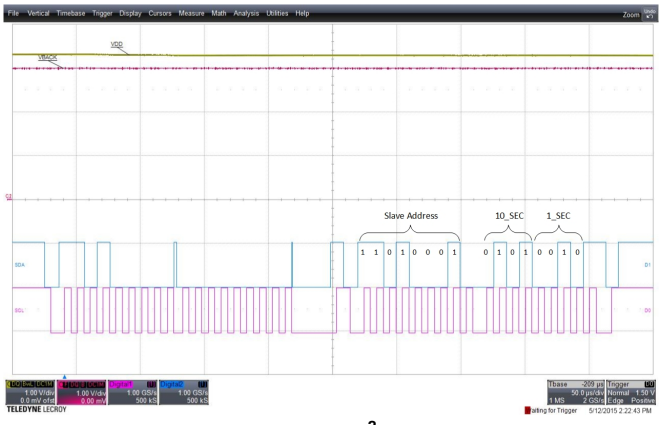

Figure 9. Master and Slave I^2C Communication for the SECONDS Register

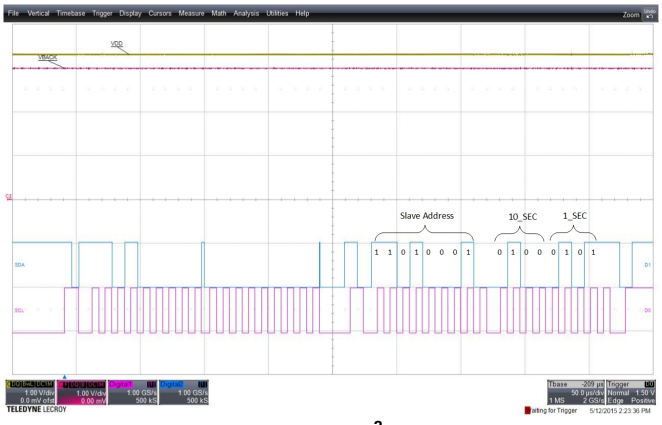

Figure 10. Master and Slave I^2C Communication for the SECONDS Register After Recovering from the Backup Supply

Copyright © 2010–2016, Texas Instruments Incorporated

9 Power Supply Recommendations

The BQ32002 is designed to operate from an input voltage supply, V_{CC}, range between 3 and 3.6 V. The user must place a minimum of 1-µF ceramic bypass capacitor rated for at least the maximum voltage as close as possible to V_{CC} and GND pin.

10 Layout

10.1 Layout Guidelines

The V_{CC} pin should be bypassed to GND using a low-ESR ceramic bypass capacitor with a minimum recommended value of 1 µF. This capacitor must be placed as close to the V_{CC} and GND pins as possible with thick trace or ground plane connection to the device GND pin.

Locate the 32.768-kHz crystal oscillator as close as possible to the OSCI and OSCO pins. This will minimize stray capacitance.

10.2 Layout Example

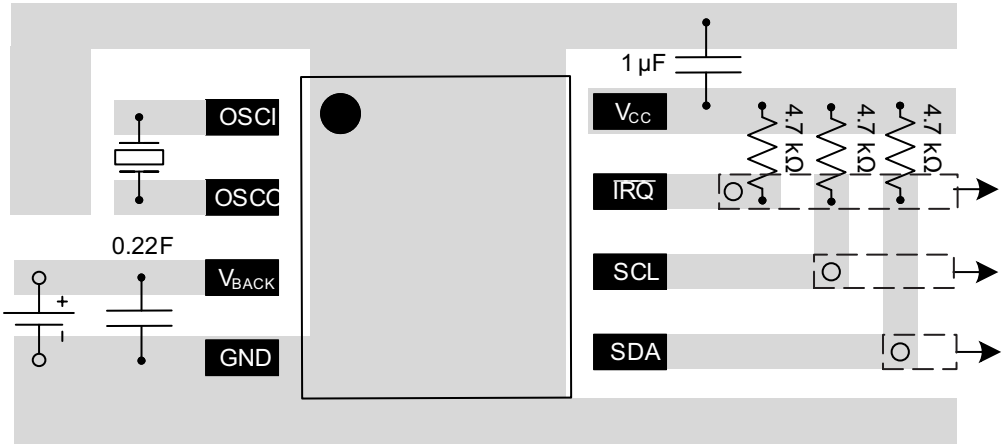

Figure 11. Recommended PCB Layout

11 Device and Documentation Support

11.1 Community Resources

The following links connect to TI community resources. Linked contents are provided "AS IS" by the respective contributors. They do not constitute TI specifications and do not necessarily reflect TI's views; see TI's Terms of Use.

TI E2E™ Online Community ***TI's Engineer-to-Engineer (E2E) Community.*** Created to foster collaboration among engineers. At e2e.ti.com, you can ask questions, share knowledge, explore ideas and help solve problems with fellow engineers.

Design Support ***TI's Design Support*** Quickly find helpful E2E forums along with design support tools and contact information for technical support.

11.2 Trademarks

E2E is a trademark of Texas Instruments.
All other trademarks are the property of their respective owners.

11.3 Electrostatic Discharge Caution



These devices have limited built-in ESD protection. The leads should be shorted together or the device placed in conductive foam during storage or handling to prevent electrostatic damage to the MOS gates.

11.4 Glossary

SLYZ022 — *TI Glossary*.

This glossary lists and explains terms, acronyms, and definitions.

12 Mechanical, Packaging, and Orderable Information

The following pages include mechanical, packaging, and orderable information. This information is the most current data available for the designated devices. This data is subject to change without notice and revision of this document. For browser-based versions of this data sheet, refer to the left-hand navigation.

Copyright © 2010–2016, Texas Instruments Incorporated

PACKAGING INFORMATION

Orderable Device	Status (1)	Package Type	Package Drawing	Pins	Package Qty	Eco Plan (2)	Lead/Ball Finish (6)	MSL Peak Temp (3)	Op Temp (°C)	Device Marking (4/5)	Samples
BQ32002D	ACTIVE	SOIC	D	8	75	Green (RoHS & no Sb/Br)	NIPDAU	Level-1-260C-UNLIM	-40 to 85	32002	Samples
BQ32002DR	ACTIVE	SOIC	D	8	2500	Green (RoHS & no Sb/Br)	NIPDAU	Level-1-260C-UNLIM		32002	Samples

(1) The marketing status values are defined as follows:
ACTIVE: Product device recommended for new designs.
LIFEBUY: TI has announced that the device will be discontinued, and a lifetime-buy period is in effect.
NRND: Not recommended for new designs. Device is in production to support existing customers, but TI does not recommend using this part in a new design.
PREVIEW: Device has been announced but is not in production. Samples may or may not be available.
OBSOLETE: TI has discontinued the production of the device.

(2) **RoHS:** TI defines "RoHS" to mean semiconductor products that are compliant with the current EU RoHS requirements for all 10 RoHS substances, including the requirement that RoHS substance do not exceed 0.1% by weight in homogeneous materials. Where designed to be soldered at high temperatures, "RoHS" products are suitable for use in specified lead-free processes. TI may reference these types of products as "Pb-Free".
RoHS Exempt: TI defines "RoHS Exempt" to mean products that contain lead but are compliant with EU RoHS pursuant to a specific EU RoHS exemption.
Green: TI defines "Green" to mean the content of Chlorine (Cl) and Bromine (Br) based flame retardants meet JS709B low halogen requirements of <=1000ppm threshold. Antimony trioxide based flame retardants must also meet the <=1000ppm threshold requirement.

(3) MSL, Peak Temp. - The Moisture Sensitivity Level rating according to the JEDEC industry standard classifications, and peak solder temperature.

(4) There may be additional marking, which relates to the logo, the lot trace code information, or the environmental category on the device.

(5) Multiple Device Markings will be inside parentheses. Only one Device Marking contained in parentheses and separated by a "~" will appear on a device. If a line is indented then it is a continuation of the previous line and the two combined represent the entire Device Marking for that device.

(6) Lead/Ball Finish - Orderable Devices may have multiple material finish options. Finish options are separated by a vertical ruled line. Lead/Ball Finish values may wrap to two lines if the finish value exceeds the maximum column width.

Important Information and Disclaimer: The information provided on this page represents TI's knowledge and belief as of the date that it is provided. TI bases its knowledge and belief on information provided by third parties, and makes no representation or warranty as to the accuracy of such information. Efforts are underway to better integrate information from third parties. TI has taken and continues to take reasonable steps to provide representative and accurate information but may not have conducted destructive testing or chemical analysis on incoming materials and chemicals. TI and TI suppliers consider certain information to be proprietary, and thus CAS numbers and other limited information may not be available for release.

In no event shall TI's liability arising out of such information exceed the total purchase price of the TI part(s) at issue in this document sold by TI to Customer on an annual basis.

TAPE AND REEL INFORMATION

REEL DIMENSIONS

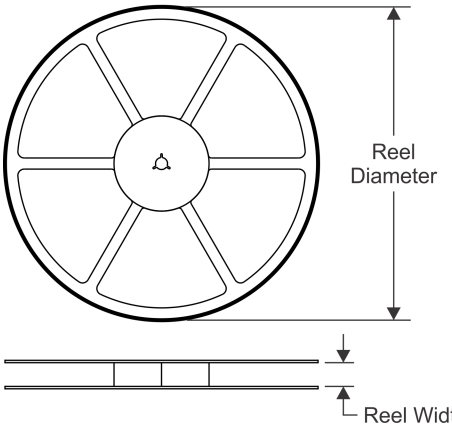

TAPE DIMENSIONS

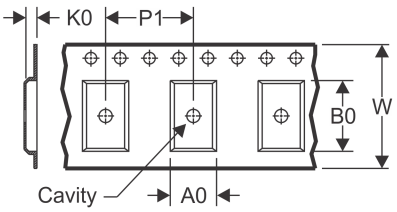

A0	Dimension designed to accommodate the component width
B0	Dimension designed to accommodate the component length
K0	Dimension designed to accommodate the component thickness
W	Overall width of the carrier tape
P1	Pitch between successive cavity centers

QUADRANT ASSIGNMENTS FOR PIN 1 ORIENTATION IN TAPE

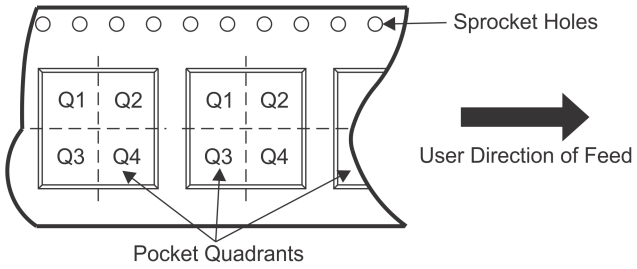

*All dimensions are nominal

Device	Package Type	Package Drawing	Pins	SPQ	Reel Diameter (mm)	Reel Width W1 (mm)	A0 (mm)	B0 (mm)	K0 (mm)	P1 (mm)	W (mm)	Pin1 Quadrant
BQ32002DR	SOIC	D	8	2500	330.0	12.4	6.4	5.2	2.1	8.0	12.0	Q1

TAPE AND REEL BOX DIMENSIONS

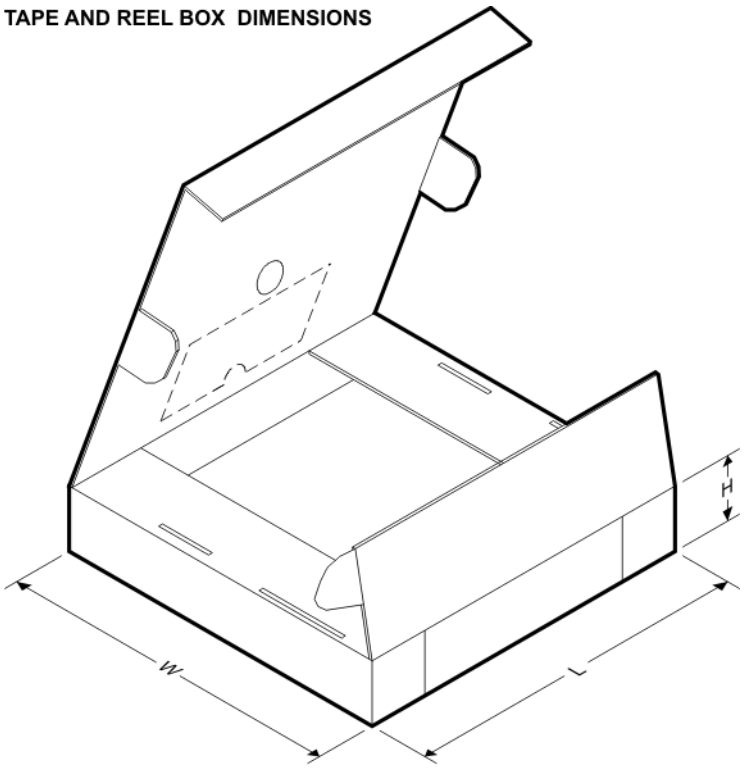

*All dimensions are nominal

Device	Package Type	Package Drawing	Pins	SPQ	Length (mm)	Width (mm)	Height (mm)
BQ32002DR	SOIC	D	8	2500	367.0	367.0	35.0

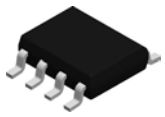

PACKAGE OUTLINE

D0008A

SOIC - 1.75 mm max height

SMALL OUTLINE INTEGRATED CIRCUIT

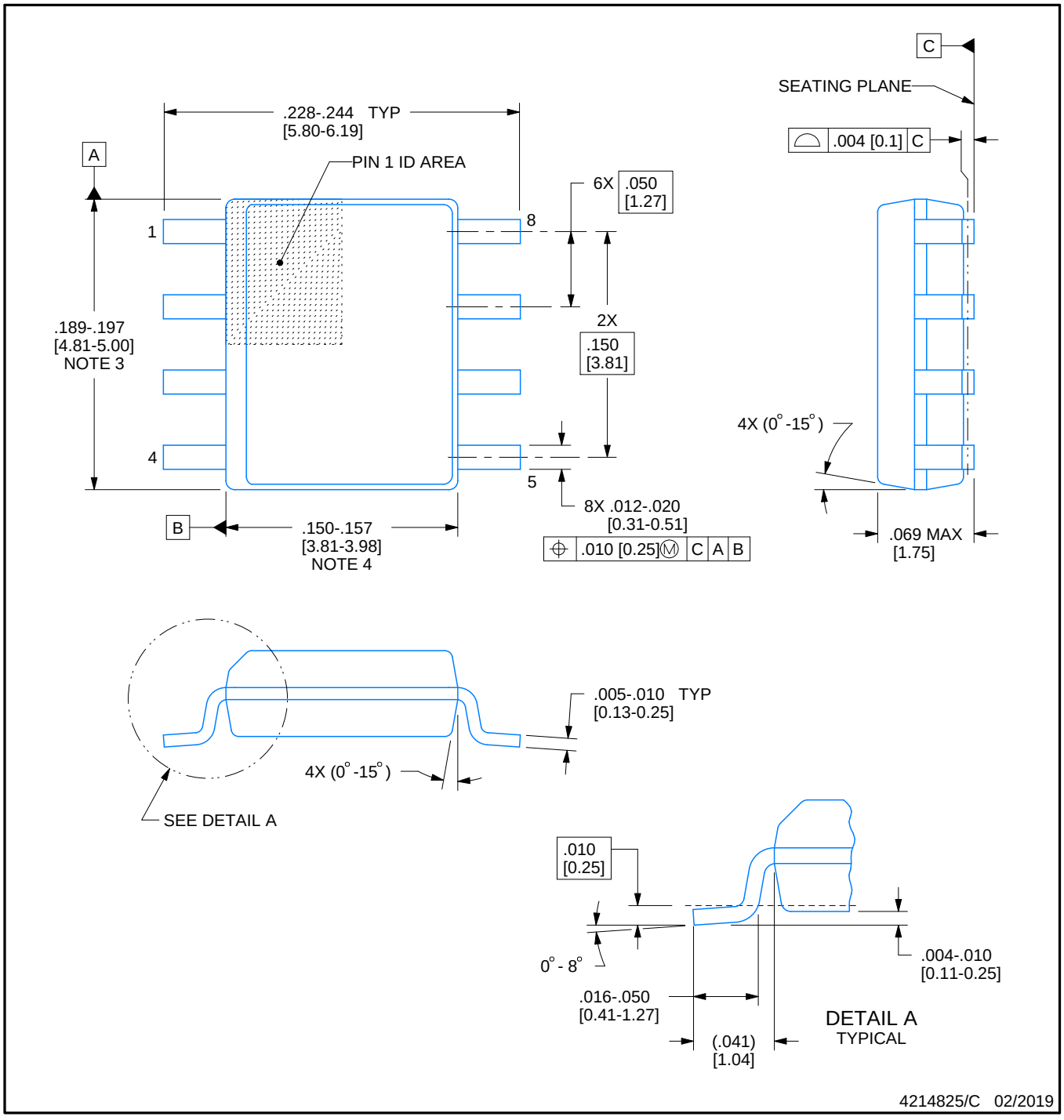

NOTES:

1. Linear dimensions are in inches [millimeters]. Dimensions in parenthesis are for reference only. Controlling dimensions are in inches. Dimensioning and tolerancing per ASME Y14.5M.
2. This drawing is subject to change without notice.
3. This dimension does not include mold flash, protrusions, or gate burrs. Mold flash, protrusions, or gate burrs shall not exceed .006 [0.15] per side.
4. This dimension does not include interlead flash.
5. Reference JEDEC registration MS-012, variation AA.

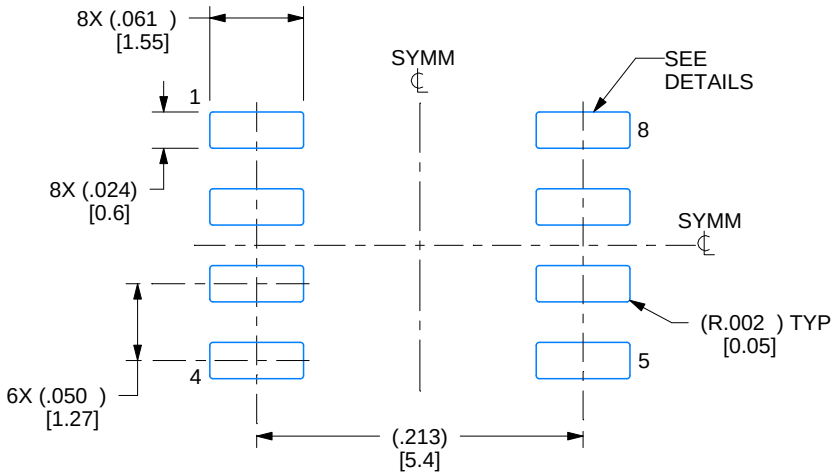

LAND PATTERN EXAMPLE
EXPOSED METAL SHOWN
SCALE:8X

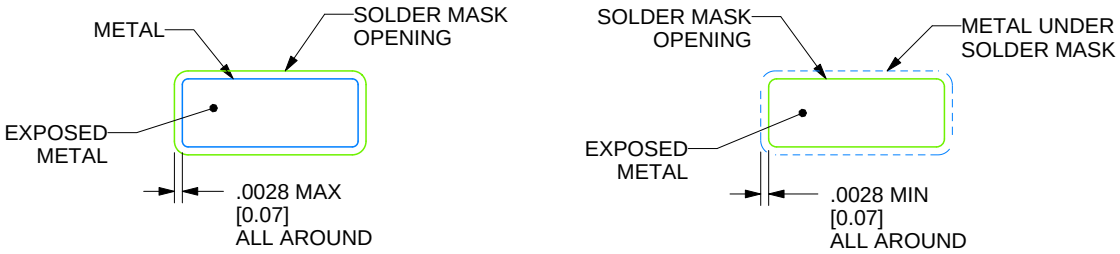

SOLDER MASK DETAILS

4214825/C 02/2019

NOTES: (continued)

6. Publication IPC-7351 may have alternate designs.
7. Solder mask tolerances between and around signal pads can vary based on board fabrication site.

EXAMPLE STENCIL DESIGN

D0008A

SOIC - 1.75 mm max height

SMALL OUTLINE INTEGRATED CIRCUIT

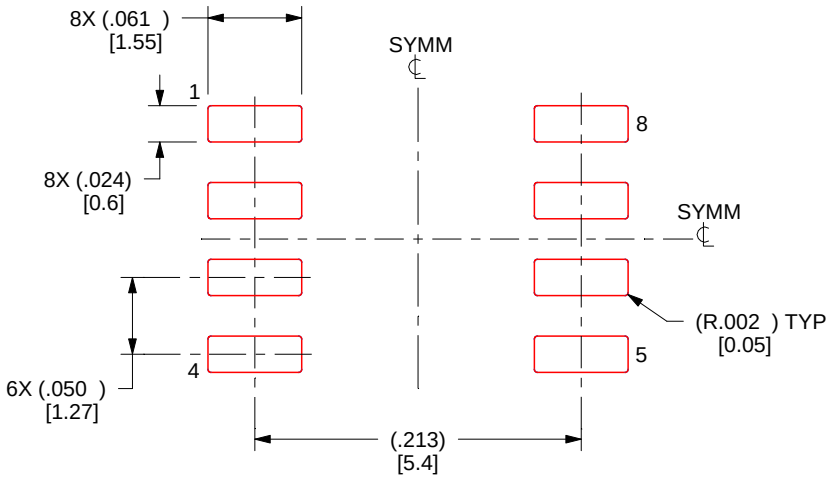

SOLDER PASTE EXAMPLE
BASED ON .005 INCH [0.125 MM] THICK STENCIL
SCALE:8X

4214825/C 02/2019

NOTES: (continued)

8. Laser cutting apertures with trapezoidal walls and rounded corners may offer better paste release. IPC-7525 may have alternate design recommendations.
9. Board assembly site may have different recommendations for stencil design.

IMPORTANT NOTICE AND DISCLAIMER

TI PROVIDES TECHNICAL AND RELIABILITY DATA (INCLUDING DATASHEETS), DESIGN RESOURCES (INCLUDING REFERENCE DESIGNS), APPLICATION OR OTHER DESIGN ADVICE, WEB TOOLS, SAFETY INFORMATION, AND OTHER RESOURCES “AS IS” AND WITH ALL FAULTS, AND DISCLAIMS ALL WARRANTIES, EXPRESS AND IMPLIED, INCLUDING WITHOUT LIMITATION ANY IMPLIED WARRANTIES OF MERCHANTABILITY, FITNESS FOR A PARTICULAR PURPOSE OR NON-INFRINGEMENT OF THIRD PARTY INTELLECTUAL PROPERTY RIGHTS.

These resources are intended for skilled developers designing with TI products. You are solely responsible for (1) selecting the appropriate TI products for your application, (2) designing, validating and testing your application, and (3) ensuring your application meets applicable standards, and any other safety, security, or other requirements. These resources are subject to change without notice. TI grants you permission to use these resources only for development of an application that uses the TI products described in the resource. Other reproduction and display of these resources is prohibited. No license is granted to any other TI intellectual property right or to any third party intellectual property right. TI disclaims responsibility for, and you will fully indemnify TI and its representatives against, any claims, damages, costs, losses, and liabilities arising out of your use of these resources.

TI’s products are provided subject to TI’s Terms of Sale (www.ti.com/legal/termsofsale.html) or other applicable terms available either on ti.com or provided in conjunction with such TI products. TI’s provision of these resources does not expand or otherwise alter TI’s applicable warranties or warranty disclaimers for TI products.

Mailing Address: Texas Instruments, Post Office Box 655303, Dallas, Texas 75265
Copyright © 2020, Texas Instruments Incorporated