User's Guide
SLVUB31A–September 2017–Revised March 2018

bq25910EVM-854 Evaluation Module

This user's guide describes the characteristics, operation, and use of the bq25910 Evaluation Module (EVM). A complete schematic diagram, printed-circuit board layouts, and bill of materials (BOM) are included in this document.

Contents

1 Introduction 2
1.1 EVM Features 2
1.2 I/O Descriptions 2
1.3 Recommended Operating Conditions 4
2 Test Setup and Results 4
2.1 Equipment 4
2.2 Test Setup 5
3 Board Layout 9
4 Schematic and Bill of Materials 12
4.1 Schematic 12
4.2 Bill of Materials 13

List of Figures

1 bq25910EVM-854 Image 2
2 bq25910EVM Setup 5
3 bqStudio Device Tabs 5
4 bq25910 Registers 6
5 bq25910 WD_RST bit 6
6 bq25910 Watchdog Timer Disable 7
7 bq25898D Enable HIZ Mode 7
8 bq25910EVM-854 Top Overlay 9
9 bq25910EVM-854 Top Solder 9
10 bq25910EVM-854 Top Layer 9
11 bq25910EVM-854 Signal Layer 1 9
12 bq25910EVM-854 Signal Layer 2 9
13 bq25910EVM-854 Bottom Layer 9
14 bq25910EVM-854 Bottom Solder 10
15 bq25910EVM-854 Bottom Overlay 10
16 bq25910EVM-854 Drill Drawing 10
17 bq25910EVM-854 Board Dimensions 10
18 bq25910EVM-854 Schematic 12

List of Tables

1 Device Data Sheets 2
2 bq25910EVM Ports 3
3 bq25910EVM Jumpers 3
4 bq25910EVM Test Points 3
5 bq25910EVM Recommended Operating Conditions 4

Copyright © 2017–2018, Texas Instruments Incorporated

6 Bill of Materials 13

1 Introduction

The bq25910 is an integrated three-level switch-mode parallel battery charge management device for single cell Li-ion and Li-polymer batteries. Utilization of the three-level converter reduces solution footprint and volume while maintaining highest switch-mode operation efficiency.

This evaluation module includes both the master and parallel chargers: the bq25898D and the bq25910, respectively. The bq25898D is a highly-integrated 4-A switch-mode battery charge management and system power-path device for single cell Li-ion and Li-polymer battery.

1.1 EVM Features

The device data sheets, listed in Table 1, provide detailed features and operation.

Table 1. Device Data Sheets

Device	Data Sheet
bq25910	SLVSDU0
bq25898D	SLUSCA6

1.2 I/O Descriptions

The bq25910EVM available ports and jumpers are described in Table 2 and Table 3.

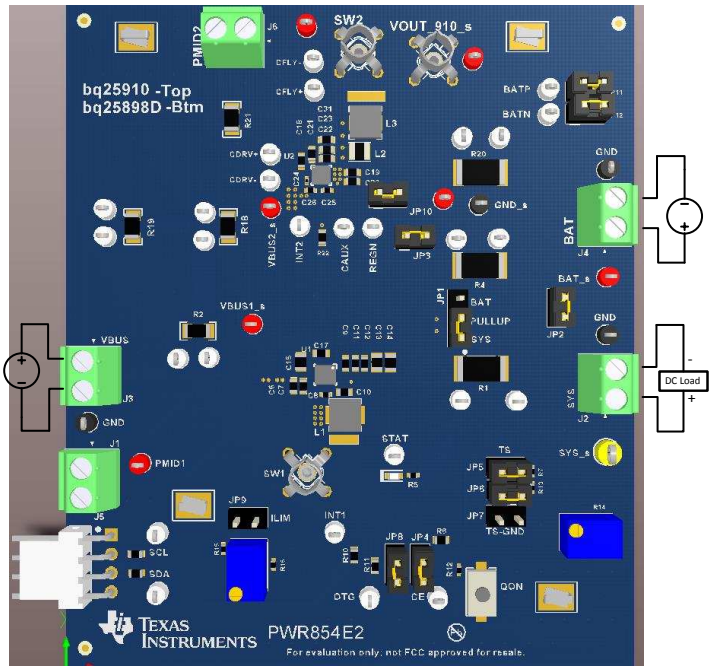

Figure 1. bq25910EVM-854 Image

NOTE: Do not use sense lines and testpoints on the bq25910EVM to carry large amounts of current.

Copyright © 2017–2018, Texas Instruments Incorporated

Table 2. bq25910EVM Ports

Port	Description
J1	bq25898D PMID port
J2	bq25898D SYS output
J3	bq25898D and bq25910 VBUS input
J4	Battery connector for both bq25898D and bq25910
J5	I^2C Molex connector
J6	bq25910 PMID port

Table 3. bq25910EVM Jumpers

Jumper	Description	Default Configuration
JP1	Pullup selection jumper. Choose between SYS or BAT.	Installed to SYS
JP2	bq25898D battery sense line	Installed
JP3	bq25910 INT pin jumper	Installed
JP4	bq25898D CE pin (charge enabled)	Installed
JP5	bq25898D REGN to TS network connection	Installed
JP6	TS network connection to potentiometer	Installed
JP7	TS to GND connection. Can also be used to attach an external 103AT thermistor.	Not Installed
JP8	bq25898D OTG to GND pin connection	Installed
JP9	bq25898D ILIM to GND pin connection	Not Installed
JP10	bq25910 IND_SNS pin connection	Installed
JP11	bq25910 BATP sense line connection	Installed
JP12	bq25910 BATN sense line connection	Installed

Table 4. bq25910EVM Test Points

Test Point	Description
VBUS1_s	Sense line for the bq25898D VBUS for efficiency measurement
PMID1	Connection to the bq25898D PMID plane
VBUS2_s	Sense line for the bq25910 VBUS for efficiency measurement
PMID2	Connection to the bq25910 PMID plane
BAT_s	bq25898D battery sense line
BATP	bq25910 positive battery sense line
BATN	bq25910 negative battery sense line
GND_s	bq25910 sense line to GND plane near IC for efficiency measurement
SW1	bq25898D switch node
SW2	bq25910 switch node
VOUT_910_s	bq25910 converter output for efficiency measurement
CFLY+/CFLY–	Differential test points for the bq25910 CFLY capacitor
CDRV+/CDRV–	Differential test points for the bq25910 CDRV capacitor
INT2	bq25910 Interrupt pin
CAUX	bq25910 CAUX capacitor
REGN	bq25910 REGN output

Copyright © 2017–2018, Texas Instruments Incorporated

1.3 Recommended Operating Conditions

Table 5. bq25910EVM Recommended Operating Conditions

Symbol	Description	MIN	TYP	MAX	Unit
VBUS	Input voltage from AC adapter	3.9		14	V
IBUS	Input supply current from AC adapter			3.6	A
VBAT	Battery voltage applied at J4	0		4.775	V
IBAT	bq25910 output current	0		6	A

2 Test Setup and Results

2.1 Equipment

In order to evaluate the bq25910EVM, the following are required:

- **Power Supply:** Capable of providing up to 14 V and 3.6 A to be used for VBUS.
- **Battery Emulator:** A 4-quadrant supply capable of constant voltage ≤ 4.775 V and constant current ≤ 6 A.
- **DC Electronic Load:** Used to emulate system load.
- **Multimeters**: Used for voltage measuring and at least 2 current meters capable of measuring 6 A or can use the sense resistors on the board.
- **Computer**: A computer with at least one USB port and USB cable.
- **EV2400 USB-based PC Interface Board:** Used to interface with the bq25910EVM via I2C. The EV2400 is purchased separately and is found here.
- **bqStudio**: Software platform used to send commands to the bq25910EVM via I2C using the EV2400. Download the latest version of bqStudio from ti.com. Double click the bqStudio setup installation file and follow the installation prompts. The software supports Microsoft® Windows® XP and Windows 7 operating systems.

Copyright © 2017–2018, Texas Instruments Incorporated

2.2 Test Setup

Both the master and parallel chargers are present on the EVM. This user's guide focuses on setting up and evaluation of the bq25910 charger.

Figure 2 shows the connections between the power supplies, EV2400 and the bq25910EVM.

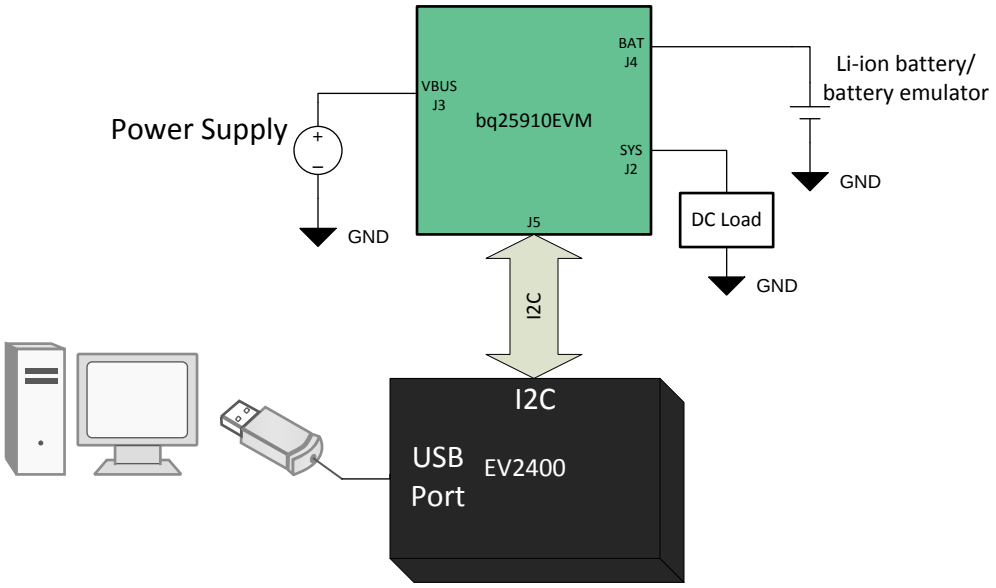

Figure 2. bq25910EVM Setup

2.2.1 Setting up the bq25898D

This user's guide covers the necessary steps to set up the master charger for parallel charger evaluation.

- Connect the battery emulator to battery connector, **J4**. Set battery emulator to 3.8 V.
- Using a 4-wire Molex cable (included with EV2400), connect the I2C port to the **J5** connector on the EVM. Connect the USB cable to any USB port on the PC with bqStudio installed.
- Apply 5 V at VBUS connector, **J3.** At this point, the bq25898D should be providing 2 A of charge current to the battery.
- Open bqStudio and select the **bq25910EVM** from the *Charger* menu.

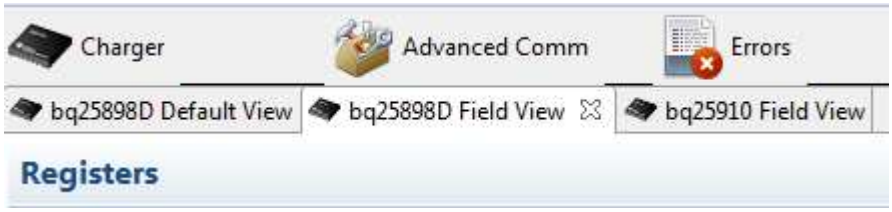

Figure 3. bqStudio Device Tabs

- The software allows you to modify both the bq25898D and bq25910 I2C registers. Figure 3 shows the device tabs on bqStudio. Selecting one of them opens the register interface for that particular device and allows the values to be modified via I2C.
- The DC electronic load can be connected at **J2** to emulate the system load. Note the 4-A maximum output current of the converter and the maximum 6 A of continuous discharge current from the battery of the bq25898D.
- For full details on the test setup of the bq25898D, refer to bq25898, bq25898D, and bq25898C PWR730 Evaluation Module.
- To evaluate bq25910 only, place the bq25898D in HIZ mode.

Copyright © 2017–2018, Texas Instruments Incorporated

2.2.2 Setting up the bq25910

This section describes the options available for evaluation of the bq25910 and how to set up the device for basic evaluation.

- Once the master charger is set up, select the *bq25910 Field View* tab on bqStudio to continue to set up the parallel charger.

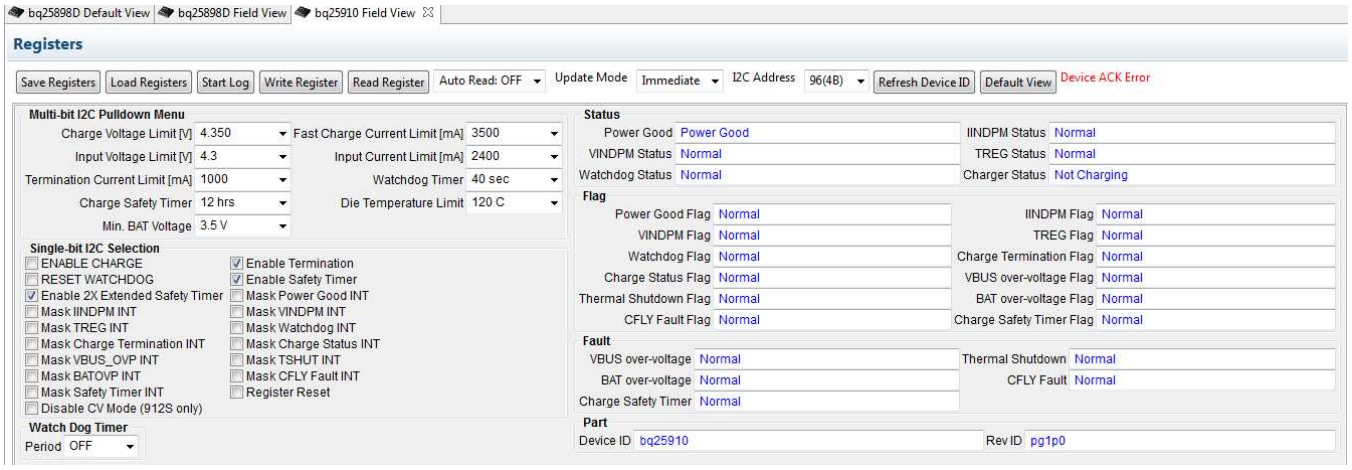

Figure 4. bq25910 Registers

- Figure 4 shows the configurable registers, single-bit I2C commands and status registers available for the bq25910.
- The bq25910 is a host controlled parallel charger and will automatically shut off when the I2C watchdog timer is not reset within the timer period (40 seconds by default). While in default mode, charging is disabled until the host sets the ENABLE CHARGE bit and resets the watchdog timer via the *WD_RST* bit (RESET WATCHDOG command).
- After POR, the device is in default mode with the watchdog timer expired. While in default mode, the bq25910 remains in HIZ mode and will not charge the battery.
- The *WD_RST* bit needs to be set first to force the charger out of default mode. This can be done by setting the *RESET WATCHDOG* checkbox on bqStudio, see Figure 5 for the location of the *WD_RST* bit in the *Single-bit I2C Selection* section of bqStudio.

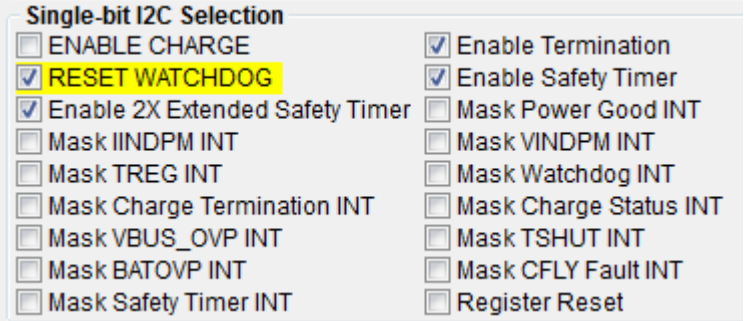

Figure 5. bq25910 WD_RST bit

- Once *WD_RST* is set, all the device parameters can be programmed. To keep the device in host mode, the host has to reset the watchdog timer by setting the *WD_RST* bit before the timer expires or disable the watchdog timer. For the purpose of this evaluation, we disable the watchdog timer by writing REG05[5:4] = 00b. This can be done by using the drop-down menu for the *Watchdog Timer* setting on the *Multi-bit I2C Pulldown Menu*. See Figure 6 for the location in bqStudio.

Copyright © 2017–2018, Texas Instruments Incorporated

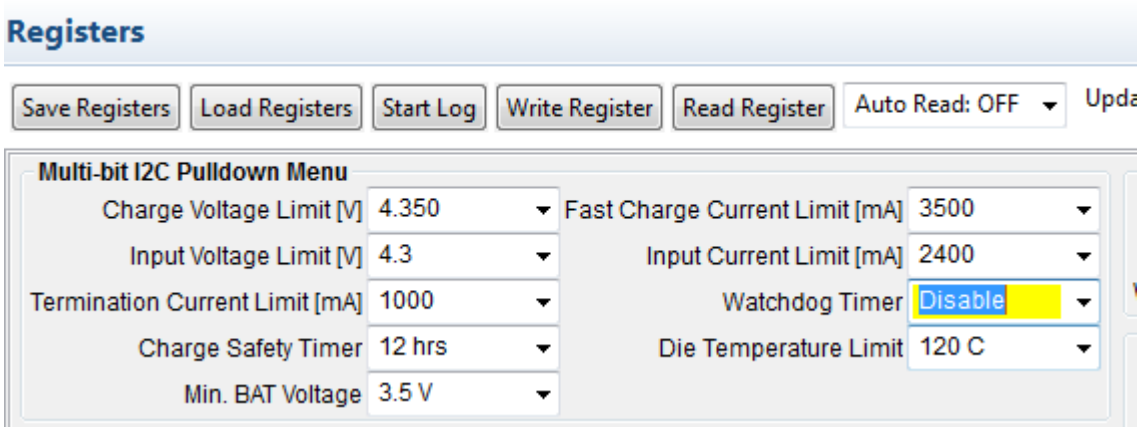

Figure 6. bq25910 Watchdog Timer Disable

2.2.3 Master and Parallel Chargers Interaction

The bq25898D acts as the master charger and is in charge of pre-conditioning and full termination of the battery. The parallel charger, the bq25910, monitors the battery voltage and compares it to the V_{BAT_LOWV} threshold. Once the battery voltage rises above the V_{BAT_LOWV} threshold, the bq25910 turns on and begins charging, applying the charge current set on the *Fast Charge Current Limit* register.

Once the bq25910 begins charging, the master charger can be either placed in HIZ mode or continue running in parallel with the bq25910.

2.2.3.1 Master Charger In HIZ mode

Placing the master charger in HIZ mode when the parallel charger begins charging is recommended because this allows evaluating the performance of the bq25910 independently from the master charger. This can be done by navigating to the bq25898D tab on bqStudio and setting the *Enable HIZ* checkbox, refer to Figure 7.

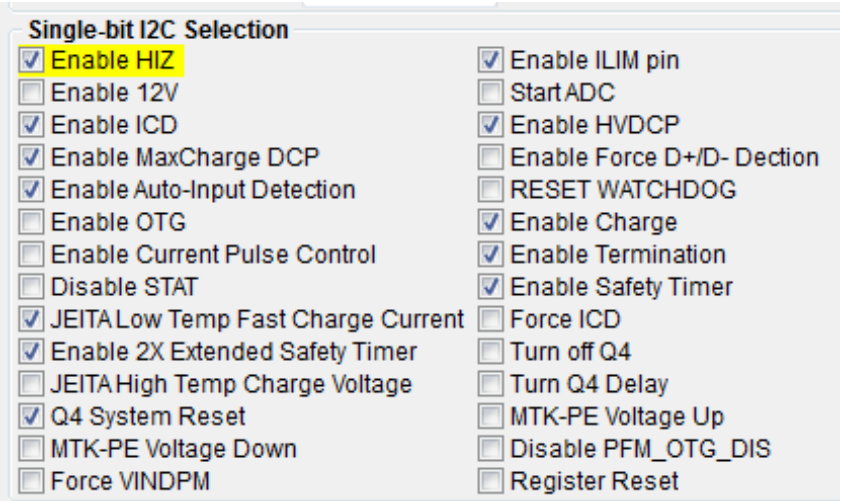

Figure 7. bq25898D Enable HIZ Mode

Copyright © 2017–2018, Texas Instruments Incorporated

2.2.4 Measuring bq25910 Charge Efficiency

This section details how to evaluate the bq25910 charge efficiency.

1. Apply 9 V on VBUS at the **J3** port on the EVM.
2. Apply 3.8 V on BAT at the **J4** port on the EVM.
3. Follow the steps in section 2.2.3.1, to place the master charger in HIZ mode.
4. Follow the steps in section 2.2.2, to enable charge on the bq25910.
5. In order to calculate efficiency, the input voltage, battery voltage and charge current must be set correctly.
   - On bqStudio, navigate to the bq25910 device tab and select **3000mA** from the *Fast Charge Current Limit* drop-down menu.
   - Using a multimeter, measure the voltage at the **BAT_s** testpoint with respect to the **GND_s** testpoint and modify the battery emulator voltage until 3.8 V is measured.
   - Using a multimeter, measure the voltage at the **VBUS2_s** testpoint with respect to the **GND_s** testpoint and modify the power supply until 9 V is measured.
   - At this point, the device should be providing 3 A of charge current. Input current and charge current can be measured either by an ammeter in series with VBUS and BAT or measuring the voltage across the sense resistors, **R20** and **R21**, and converting the voltage to current.
   - Once input voltage, battery voltage, charge current and input current are measured, efficiency can be calculated.

Copyright © 2017–2018, Texas Instruments Incorporated

3 Board Layout

Figure 8 through Figure 17 illustrate the bq25910EVM-854 PCB layouts.

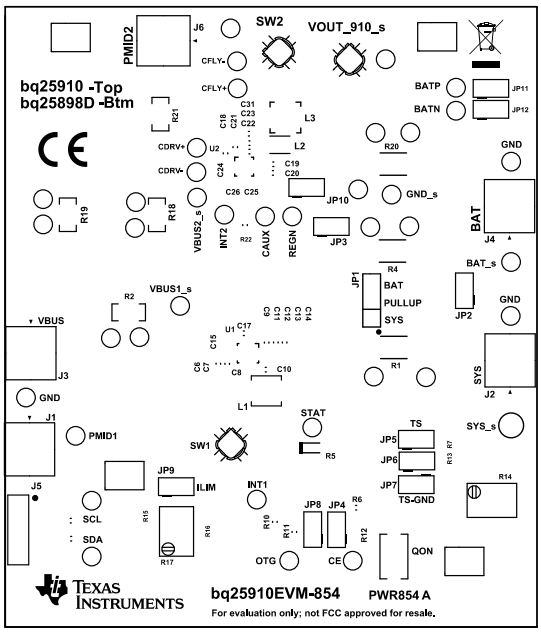

Figure 8. bq25910EVM-854 Top Overlay

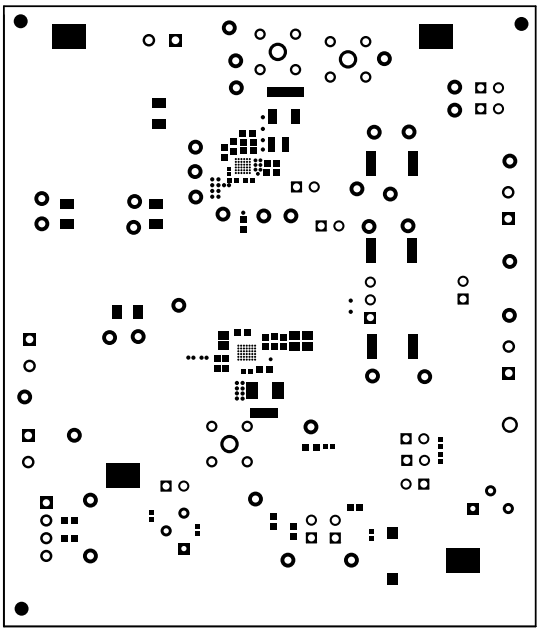

Figure 9. bq25910EVM-854 Top Solder

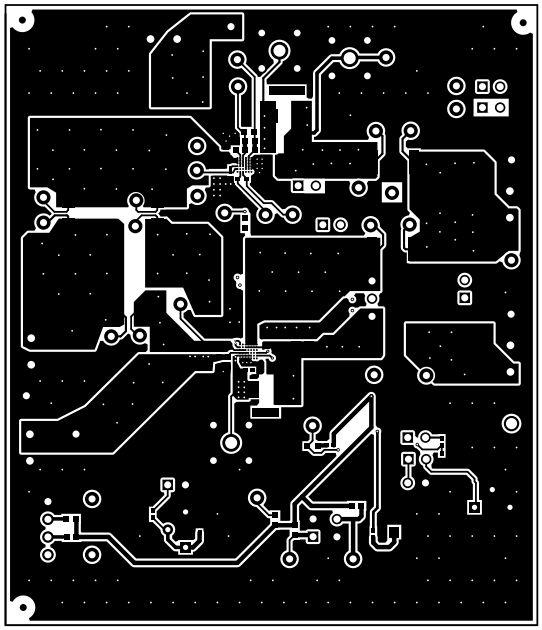

Figure 10. bq25910EVM-854 Top Layer

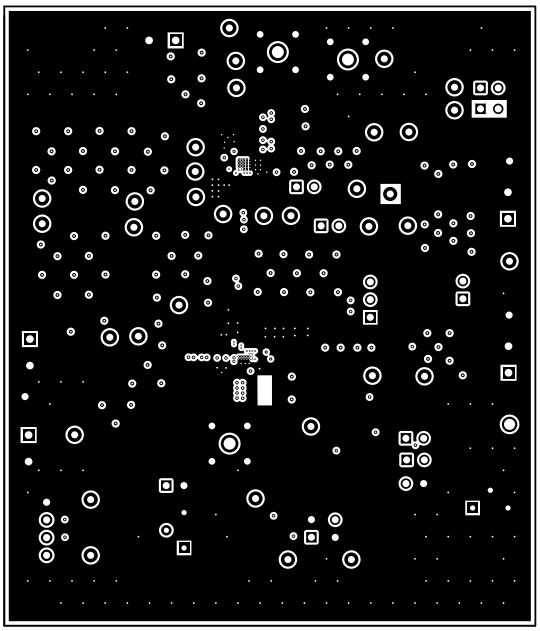

Figure 11. bq25910EVM-854 Signal Layer 1

Copyright © 2017–2018, Texas Instruments Incorporated

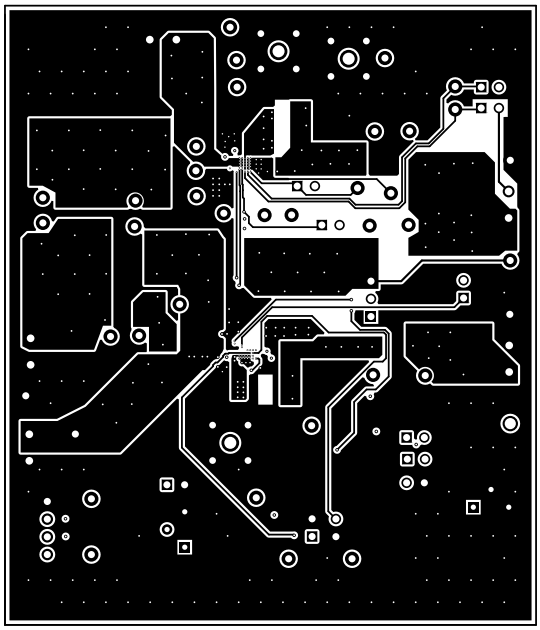

Figure 12. bq25910EVM-854 Signal Layer 2

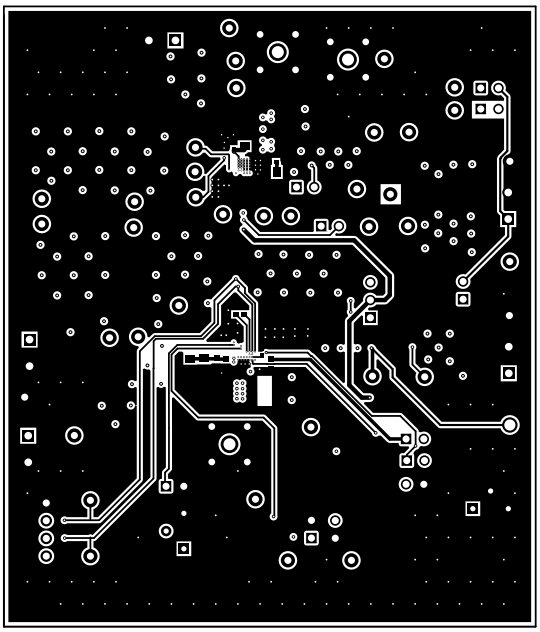

Figure 13. bq25910EVM-854 Bottom Layer

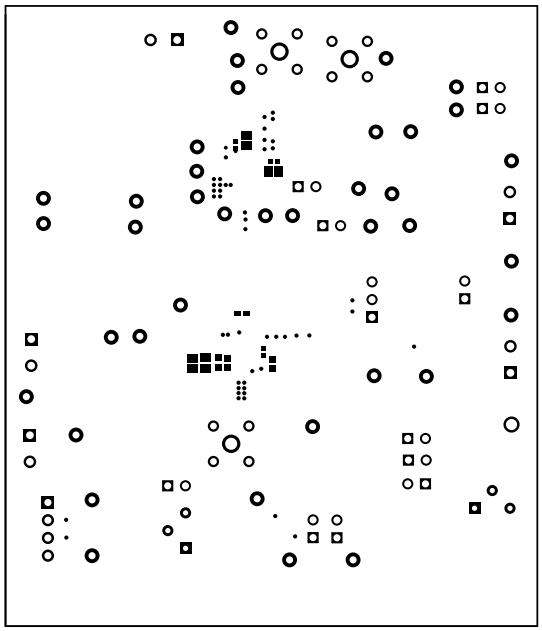

Figure 14. bq25910EVM-854 Bottom Solder

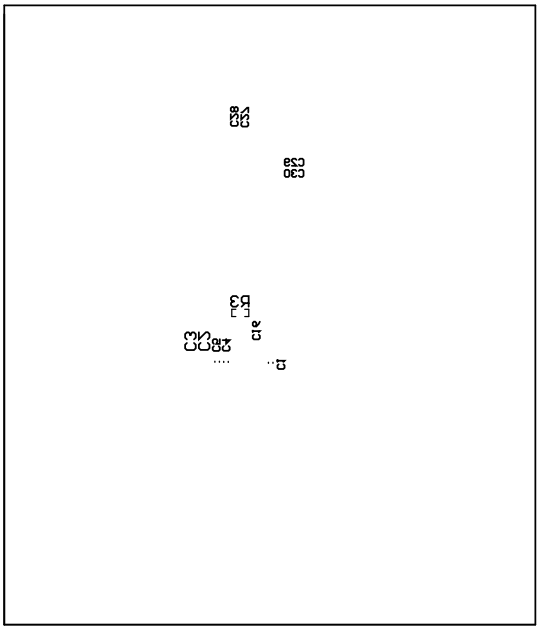

Figure 15. bq25910EVM-854 Bottom Overlay

Copyright © 2017–2018, Texas Instruments Incorporated

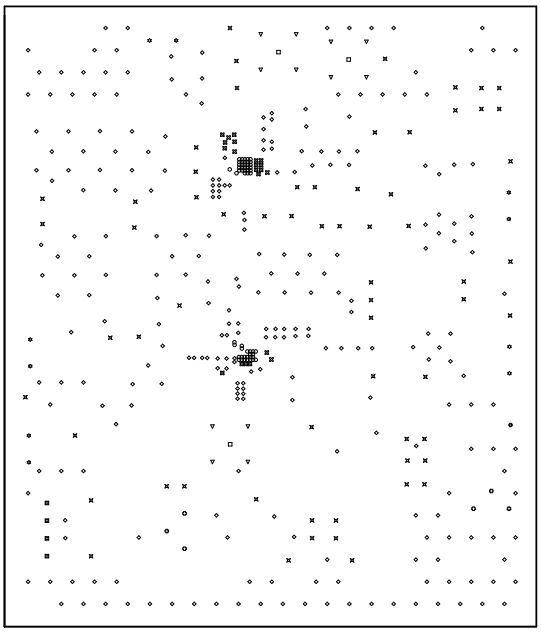

Figure 16. bq25910EVM-854 Drill Drawing

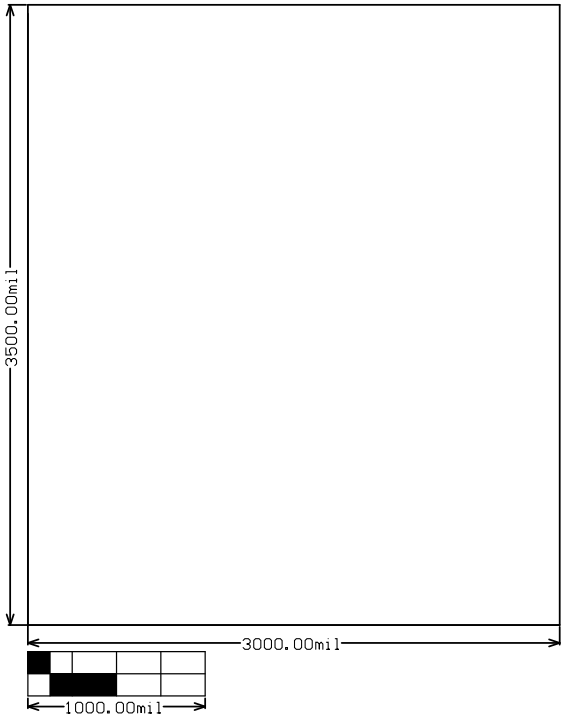

Figure 17. bq25910EVM-854 Board Dimensions

Copyright © 2017–2018, Texas Instruments Incorporated

4 Schematic and Bill of Materials

This section contains the bq25910EVM-854 schematics and bill of materials.

4.1 Schematic

Figure 18 shows the bq25910EVM-854 schematics.

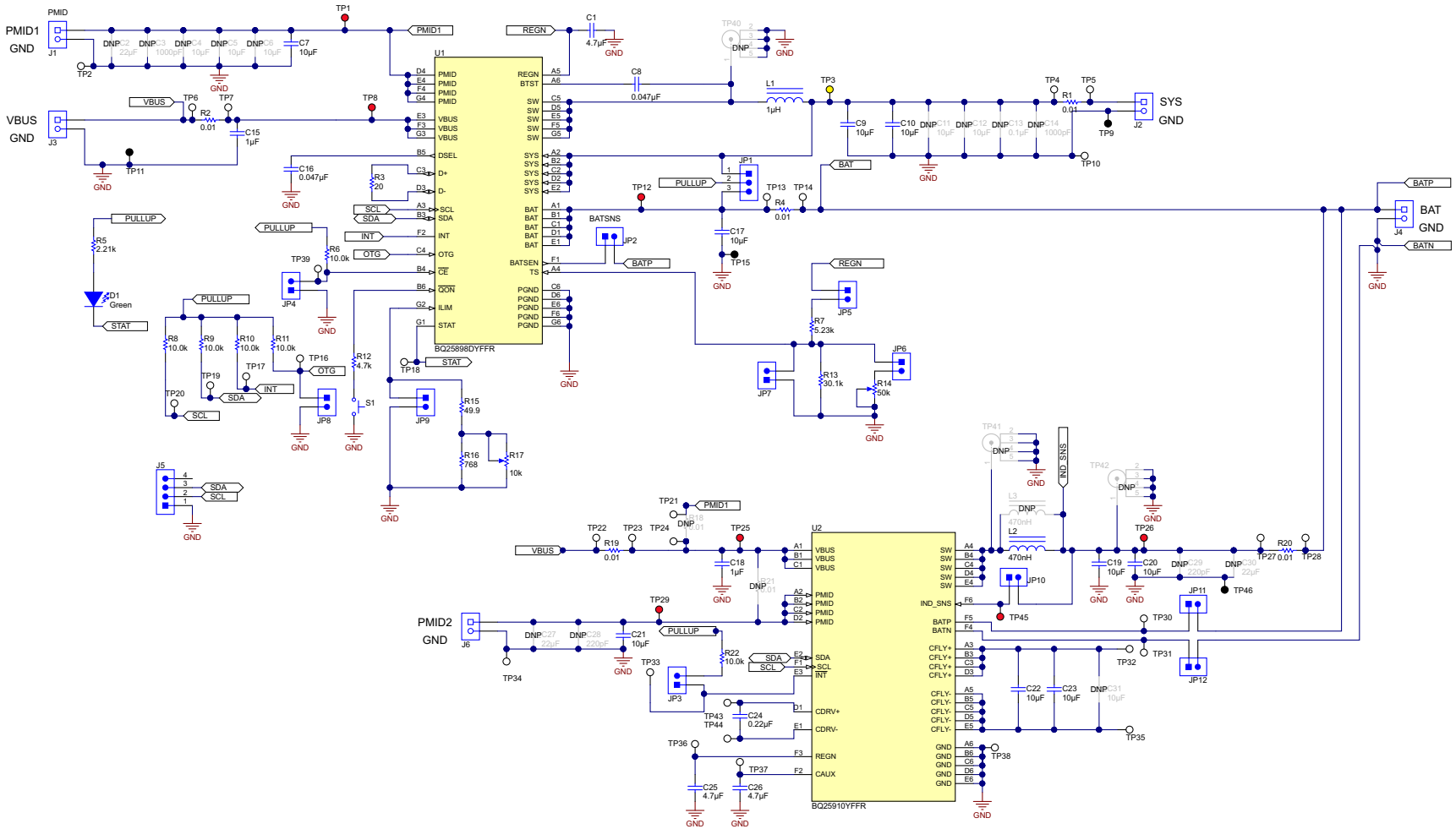

Copyright © 2018, Texas Instruments Incorporated

Figure 18. bq25910EVM-854 Schematic

Copyright © 2017–2018, Texas Instruments Incorporated

4.2 Bill of Materials

Table 6 lists the EVM bill of materials.

Table 6. Bill of Materials[(1)]

Designator	QTY	Value	Description	Package Reference	Part Number	Manufacturer	Alternate Part Number	Alternate Manufacturer
!PCB	1		Printed Circuit Board		PWR854	Any		
C1	1	4.7uF	CAP, CERM, 4.7 µF, 16 V, +/- 10%, X5R, 0603	0603	GRM188R61C475KAAJ	Murata		
C7, C9, C10, C17, C21	5	10uF	CAP, CERM, 10 µF, 25 V, +/- 20%, X5R, 0603	0603	GRM188R61E106MA73D	Murata		
C8, C16	2	0.047uF	CAP, CERM, 0.047 µF, 25 V, +/- 10%, X7R, 0402	0402	GRM155R71E473KA88D	Murata		
C15	1	1uF	CAP, CERM, 1 µF, 25 V, +/- 10%, X7R, 0805	0805	GRM219R71E105KA88D	Murata		
C18	1	1uF	CAP, CERM, 1 µF, 25 V, +/- 10%, X7R, 0603	0603	GRM188R71E105KA12D	Murata		
C19, C20	2	10uF	CAP, CERM, 10 µF, 10 V, +/- 20%, X5R, 0603	0603	GRM188R61A106MAALD	Murata		
C22, C23	2	10uF	CAP, CERM, 10 µF, 16 V, +/- 20%, X5R, 0603	0603	GRM188R61C106MAALD	Murata		
C24	1	0.22uF	CAP, CERM, 0.22 µF, 6.3 V, +/- 20%, X5R, 0201	0201	GRM033R60J224ME90	Murata		
C25, C26	2	4.7uF	CAP, CERM, 4.7 µF, 10 V, +/- 20%, X5R, 0402	0402	GRM155R61A475MEAAD	Murata		
D1	1	Green	LED, Green, SMD	1.6x0.8x0.8mm	LTST-C190GKT	Lite-On		
J1, J2, J3, J4, J6	5		Conn Term Block, 2POS, 3.81mm, TH	2POS Terminal Block	1727010	Phoenix Contact		
J5	1		Header (friction lock), 100mil, 4x1, R/A, TH	4x1 R/A Header	22-05-3041	Molex		
JP1	1		Header, 100mil, 3x1, Tin, TH	Header, 3 PIN, 100mil, Tin	PEC03SAAN	Sullins Connector Solutions		
JP2, JP3, JP4, JP5, JP6, JP7, JP8, JP9, JP10, JP11, JP12	11		Header, 100mil, 2x1, Tin, TH	Header, 2 PIN, 100mil, Tin	PEC02SAAN	Sullins Connector Solutions		
L1	1	1uH	Inductor, Wirewound, 1 µH, 4 A, 0.041 ohm, SMD	4.06x4.06mm	74437321010	Wurth Elektronik		
L2	1	470nH	Inductor, Powdered Iron, 470 nH, 5.8 A, 0.017 ohm, SMD	2.5x1.2x2mm	DFE252012F-R47M=P2	Murata Toko		
R1, R4, R20	3	0.01	RES, 0.01, 1%, 1 W, 2512	2512	WSL2512R0100FEA	Vishay-Dale		
R2, R19	2	0.01	RES, 0.01, 1%, 1 W, 1206	1206	WSLP1206R0100FEA	Vishay-Dale		
R3	1	20	RES, 20, 5%, 0.063 W, 0402	0402	CRCW040220R0JNED	Vishay-Dale		
R5	1	2.21k	RES, 2.21 k, 1%, 0.063 W, 0402	0402	CRCW04022K21FKED	Vishay-Dale		
R6, R8, R9, R10, R11, R22	6	10.0k	RES, 10.0 k, 1%, 0.1 W, 0603	0603	RCG060310K0FKEA	Vishay Draloric		
R7	1	5.23k	RES, 5.23 k, 1%, 0.063 W, 0402	0402	CRCW04025K23FKED	Vishay-Dale		
R12	1	4.7k	RES, 4.7k ohm, 5%, 0.063W, 0402	0402	CRCW04024K70JNED	Vishay-Dale		
R13	1	30.1k	RES, 30.1 k, 1%, 0.063 W, 0402	0402	CRCW040230K1FKED	Vishay-Dale		
R14	1	50k	Trimmer, 50k ohm, 0.25W, TH	4.5x8x6.7mm	3266W-1-503LF	Bourns		
R15	1	49.9	RES, 49.9, 1%, 0.063 W, 0402	0402	CRCW040249R9FKED	Vishay-Dale		
R16	1	768	RES, 768, 1%, 0.063 W, 0402	0402	CRCW0402768RFKED	Vishay-Dale		
R17	1	10k	Trimmer, 10k ohm, 0.25W, TH	4.5x8x6.7mm	3266W-1-103LF	Bourns		
S1	1		Switch, Normally open, 2.3N force, 200k operations, SMD	KSR	KSR221GLFS	C and K Components		
SH-J2, SH-J3, SH-J4, SH-J5, SH-J8, SH-J9, SH-J10, SH-J11, SH-J12, SH-J14	10	1x2	Shunt, 100mil, Gold plated, Black	Shunt	SNT-100-BK-G	Samtec	969102-0000-DA	3M

(1) Unless otherwise noted in the Alternate Part Number or Alternate Manufacturer columns, all parts may be substituted with equivalents.

Copyright © 2017–2018, Texas Instruments Incorporated

Table 6. Bill of Materials[(1)] (continued)

Designator	QTY	Value	Description	Package Reference	Part Number	Manufacturer	Alternate Part Number	Alternate Manufacturer
TP1, TP8, TP12, TP25, TP26, TP29, TP45	7		Test Point, Miniature, Red, TH	Red Miniature Testpoint	5000	Keystone		
TP2, TP10, TP34, TP38	4		Test Point, Compact, SMT	Testpoint_Keystone_Compact	5016	Keystone		
TP3	1		Test Point, Compact, Yellow, TH	Yellow Compact Testpoint	5009	Keystone		
TP4, TP5, TP6, TP7, TP13, TP14, TP16, TP17, TP18, TP19, TP20, TP21, TP22, TP23, TP24, TP27, TP28, TP30, TP31, TP32, TP33, TP35, TP36, TP37, TP39, TP43, TP44	27		Test Point, Miniature, White, TH	White Miniature Testpoint	5002	Keystone		
TP9, TP11, TP15, TP46	4		Test Point, Miniature, Black, TH	Black Miniature Testpoint	5001	Keystone		
U1	1		I2C Controlled Single Cell 4-A Fast Charger with MaxCharge Technology, YFF0042AHAC (DSBGA-42)	YFF0042AHAC	BQ25898DYFFR	Texas Instruments	BQ25898DYFFT	Texas Instruments
U2	1		1S, 6A, Three-Level Single-Cell Parallel Charger, YFF0036AEAE (DSBGA-36)	YFF0036AEAE	BQ25910YFFR	Texas Instruments	BQ25910YFFT	Texas Instruments
C2, C27, C30	0	22uF	CAP, CERM, 22 µF, 25 V, +/- 20%, X5R, 0805	0805	GRM21BR61E226ME44L	Murata		
C3, C14	0	1000pF	CAP, CERM, 1000 pF, 25 V, +/- 10%, X7R, 0805	0805	GRM216R71E102KA01D	Murata		
C4, C5, C6, C11, C12	0	10uF	CAP, CERM, 10 µF, 25 V, +/- 20%, X5R, 0603	0603	GRM188R61E106MA73D	Murata		
C13	0	0.1uF	CAP, CERM, 0.1 µF, 25 V, +/- 10%, X7R, 0805	0805	GRM21BR71E104KA01L	Murata		
C28, C29	0	220pF	CAP, CERM, 220 pF, 50 V, +/- 1%, C0G/NP0, 0402	0402	C1005C0G1H221F050BA	TDK		
C31	0	10uF	CAP, CERM, 10 µF, 16 V, +/- 20%, X5R, 0603	0603	GRM188R61C106MAALD	Murata		
FID1, FID2, FID3	0		Fiducial mark. There is nothing to buy or mount.	Fiducial	N/A	N/A		
L3	0	470nH	Inductor, 470 nH, 8.2 A, 0.018 ohm, SMD	4.1x4.1mm	HBLE041B-R47MSA	Cyntec		
R18, R21	0	0.01	RES, 0.01, 1%, 1 W, 1206	1206	WSLP1206R0100FEA	Vishay-Dale		
TP40, TP41, TP42	0		Compact Probe Tip Circuit Board Test Points, TH, 25 per	TH Scope Probe	131-5031-00	Tektronix		

Copyright © 2017–2018, Texas Instruments Incorporated

Revision History

NOTE: Page numbers for previous revisions may differ from page numbers in the current version.

Changes from Original (September 2017) to A Revision	Page
• Changed *slave* to *parallel* globally in the document.	1
• Updated *Board Layout* images for PWR854 A.	9
• Updated the schematic for PWR854 A.	12

Copyright © 2017–2018, Texas Instruments Incorporated

STANDARD TERMS FOR EVALUATION MODULES

1. *Delivery:* TI delivers TI evaluation boards, kits, or modules, including any accompanying demonstration software, components, and/or documentation which may be provided together or separately (collectively, an “EVM” or “EVMs”) to the User (“User”) in accordance with the terms set forth herein. User's acceptance of the EVM is expressly subject to the following terms.

   1.1 EVMs are intended solely for product or software developers for use in a research and development setting to facilitate feasibility evaluation, experimentation, or scientific analysis of TI semiconductors products. EVMs have no direct function and are not finished products. EVMs shall not be directly or indirectly assembled as a part or subassembly in any finished product. For clarification, any software or software tools provided with the EVM (“Software”) shall not be subject to the terms and conditions set forth herein but rather shall be subject to the applicable terms that accompany such Software

   1.2 EVMs are not intended for consumer or household use. EVMs may not be sold, sublicensed, leased, rented, loaned, assigned, or otherwise distributed for commercial purposes by Users, in whole or in part, or used in any finished product or production system.

2 *Limited Warranty and Related Remedies/Disclaimers*:

   2.1 These terms do not apply to Software. The warranty, if any, for Software is covered in the applicable Software License Agreement.

   2.2 TI warrants that the TI EVM will conform to TI's published specifications for ninety (90) days after the date TI delivers such EVM to User. Notwithstanding the foregoing, TI shall not be liable for a nonconforming EVM if (a) the nonconformity was caused by neglect, misuse or mistreatment by an entity other than TI, including improper installation or testing, or for any EVMs that have been altered or modified in any way by an entity other than TI, (b) the nonconformity resulted from User's design, specifications or instructions for such EVMs or improper system design, or (c) User has not paid on time. Testing and other quality control techniques are used to the extent TI deems necessary. TI does not test all parameters of each EVM. User's claims against TI under this Section 2 are void if User fails to notify TI of any apparent defects in the EVMs within ten (10) business days after delivery, or of any hidden defects with ten (10) business days after the defect has been detected.

   2.3 TI's sole liability shall be at its option to repair or replace EVMs that fail to conform to the warranty set forth above, or credit User's account for such EVM. TI's liability under this warranty shall be limited to EVMs that are returned during the warranty period to the address designated by TI and that are determined by TI not to conform to such warranty. If TI elects to repair or replace such EVM, TI shall have a reasonable time to repair such EVM or provide replacements. Repaired EVMs shall be warranted for the remainder of the original warranty period. Replaced EVMs shall be warranted for a new full ninety (90) day warranty period.

3 *Regulatory Notices:*

   3.1 *United States*

      3.1.1 *Notice applicable to EVMs not FCC-Approved:*

      FCC NOTICE: This kit is designed to allow product developers to evaluate electronic components, circuitry, or software associated with the kit to determine whether to incorporate such items in a finished product and software developers to write software applications for use with the end product. This kit is not a finished product and when assembled may not be resold or otherwise marketed unless all required FCC equipment authorizations are first obtained. Operation is subject to the condition that this product not cause harmful interference to licensed radio stations and that this product accept harmful interference. Unless the assembled kit is designed to operate under part 15, part 18 or part 95 of this chapter, the operator of the kit must operate under the authority of an FCC license holder or must secure an experimental authorization under part 5 of this chapter.

      3.1.2 *For EVMs annotated as FCC – FEDERAL COMMUNICATIONS COMMISSION Part 15 Compliant:*

      CAUTION

      This device complies with part 15 of the FCC Rules. Operation is subject to the following two conditions: (1) This device may not cause harmful interference, and (2) this device must accept any interference received, including interference that may cause undesired operation.

      Changes or modifications not expressly approved by the party responsible for compliance could void the user's authority to operate the equipment.

      FCC Interference Statement for Class A EVM devices

      NOTE: This equipment has been tested and found to comply with the limits for a Class A digital device, pursuant to part 15 of the FCC Rules. These limits are designed to provide reasonable protection against harmful interference when the equipment is operated in a commercial environment. This equipment generates, uses, and can radiate radio frequency energy and, if not installed and used in accordance with the instruction manual, may cause harmful interference to radio communications. Operation of this equipment in a residential area is likely to cause harmful interference in which case the user will be required to correct the interference at his own expense.

FCC Interference Statement for Class B EVM devices

NOTE: This equipment has been tested and found to comply with the limits for a Class B digital device, pursuant to part 15 of the FCC Rules. These limits are designed to provide reasonable protection against harmful interference in a residential installation. This equipment generates, uses and can radiate radio frequency energy and, if not installed and used in accordance with the instructions, may cause harmful interference to radio communications. However, there is no guarantee that interference will not occur in a particular installation. If this equipment does cause harmful interference to radio or television reception, which can be determined by turning the equipment off and on, the user is encouraged to try to correct the interference by one or more of the following measures:

- *Reorient or relocate the receiving antenna.*
- *Increase the separation between the equipment and receiver.*
- *Connect the equipment into an outlet on a circuit different from that to which the receiver is connected.*
- *Consult the dealer or an experienced radio/TV technician for help.*

3.2 *Canada*

3.2.1 *For EVMs issued with an Industry Canada Certificate of Conformance to RSS-210 or RSS-247*

Concerning EVMs Including Radio Transmitters:

This device complies with Industry Canada license-exempt RSSs. Operation is subject to the following two conditions:

(1) this device may not cause interference, and (2) this device must accept any interference, including interference that may cause undesired operation of the device.

Concernant les EVMs avec appareils radio:

Le présent appareil est conforme aux CNR d'Industrie Canada applicables aux appareils radio exempts de licence. L'exploitation est autorisée aux deux conditions suivantes: (1) l'appareil ne doit pas produire de brouillage, et (2) l'utilisateur de l'appareil doit accepter tout brouillage radioélectrique subi, même si le brouillage est susceptible d'en compromettre le fonctionnement.

Concerning EVMs Including Detachable Antennas:

Under Industry Canada regulations, this radio transmitter may only operate using an antenna of a type and maximum (or lesser) gain approved for the transmitter by Industry Canada. To reduce potential radio interference to other users, the antenna type and its gain should be so chosen that the equivalent isotropically radiated power (e.i.r.p.) is not more than that necessary for successful communication. This radio transmitter has been approved by Industry Canada to operate with the antenna types listed in the user guide with the maximum permissible gain and required antenna impedance for each antenna type indicated. Antenna types not included in this list, having a gain greater than the maximum gain indicated for that type, are strictly prohibited for use with this device.

Concernant les EVMs avec antennes détachables

Conformément à la réglementation d'Industrie Canada, le présent émetteur radio peut fonctionner avec une antenne d'un type et d'un gain maximal (ou inférieur) approuvé pour l'émetteur par Industrie Canada. Dans le but de réduire les risques de brouillage radioélectrique à l'intention des autres utilisateurs, il faut choisir le type d'antenne et son gain de sorte que la puissance isotrope rayonnée équivalente (p.i.r.e.) ne dépasse pas l'intensité nécessaire à l'établissement d'une communication satisfaisante. Le présent émetteur radio a été approuvé par Industrie Canada pour fonctionner avec les types d'antenne énumérés dans le manuel d'usage et ayant un gain admissible maximal et l'impédance requise pour chaque type d'antenne. Les types d'antenne non inclus dans cette liste, ou dont le gain est supérieur au gain maximal indiqué, sont strictement interdits pour l'exploitation de l'émetteur

3.3 *Japan*

3.3.1 *Notice for EVMs delivered in Japan:* Please see http://www.tij.co.jp/lsds/ti_ja/general/eStore/notice_01.page 日本国内に輸入される評価用キット、ボードについては、次のところをご覧ください。
http://www.tij.co.jp/lsds/ti_ja/general/eStore/notice_01.page

3.3.2 *Notice for Users of EVMs Considered "Radio Frequency Products" in Japan:* EVMs entering Japan may not be certified by TI as conforming to Technical Regulations of Radio Law of Japan.

If User uses EVMs in Japan, not certified to Technical Regulations of Radio Law of Japan, User is required to follow the instructions set forth by Radio Law of Japan, which includes, but is not limited to, the instructions below with respect to EVMs (which for the avoidance of doubt are stated strictly for convenience and should be verified by User):

1. Use EVMs in a shielded room or any other test facility as defined in the notification #173 issued by Ministry of Internal Affairs and Communications on March 28, 2006, based on Sub-section 1.1 of Article 6 of the Ministry's Rule for Enforcement of Radio Law of Japan,
2. Use EVMs only after User obtains the license of Test Radio Station as provided in Radio Law of Japan with respect to EVMs, or
3. Use of EVMs only after User obtains the Technical Regulations Conformity Certification as provided in Radio Law of Japan with respect to EVMs. Also, do not transfer EVMs, unless User gives the same notice above to the transferee. Please note that if User does not follow the instructions above, User will be subject to penalties of Radio Law of Japan.

【無線電波を送信する製品の開発キットをお使いになる際の注意事項】 開発キットの中には技術基準適合証明を受けていないものがあります。 技術適合証明を受けていないもののご使用に際しては、電波法遵守のため、以下のいずれかの措置を取っていただく必要がありますのでご注意ください。

1. 電波法施行規則第6条第1項第1号に基づく平成18年3月28日総務省告示第173号で定められた電波暗室等の試験設備でご使用いただく。
2. 実験局の免許を取得後ご使用いただく。
3. 技術基準適合証明を取得後ご使用いただく。

なお、本製品は、上記の「ご使用にあたっての注意」を譲渡先、移転先に通知しない限り、譲渡、移転できないものとします。

上記を遵守頂けない場合は、電波法の罰則が適用される可能性があることをご留意ください。 日本テキサス・インスツルメンツ株式会社

東京都新宿区西新宿６丁目２４番１号

西新宿三井ビル

3.3.3 *Notice for EVMs for Power Line Communication:* Please see http://www.tij.co.jp/lsds/ti_ja/general/eStore/notice_02.page

電力線搬送波通信についての開発キットをお使いになる際の注意事項については、次のところをご覧ください。http://www.tij.co.jp/lsds/ti_ja/general/eStore/notice_02.page

3.4 *European Union*

3.4.1 *For EVMs subject to EU Directive 2014/30/EU (Electromagnetic Compatibility Directive)*:

This is a class A product intended for use in environments other than domestic environments that are connected to a low-voltage power-supply network that supplies buildings used for domestic purposes. In a domestic environment this product may cause radio interference in which case the user may be required to take adequate measures.

4 *EVM Use Restrictions and Warnings:*

4.1 EVMS ARE NOT FOR USE IN FUNCTIONAL SAFETY AND/OR SAFETY CRITICAL EVALUATIONS, INCLUDING BUT NOT LIMITED TO EVALUATIONS OF LIFE SUPPORT APPLICATIONS.

4.2 User must read and apply the user guide and other available documentation provided by TI regarding the EVM prior to handling or using the EVM, including without limitation any warning or restriction notices. The notices contain important safety information related to, for example, temperatures and voltages.

4.3 *Safety-Related Warnings and Restrictions:*

4.3.1 User shall operate the EVM within TI's recommended specifications and environmental considerations stated in the user guide, other available documentation provided by TI, and any other applicable requirements and employ reasonable and customary safeguards. Exceeding the specified performance ratings and specifications (including but not limited to input and output voltage, current, power, and environmental ranges) for the EVM may cause personal injury or death, or property damage. If there are questions concerning performance ratings and specifications, User should contact a TI field representative prior to connecting interface electronics including input power and intended loads. Any loads applied outside of the specified output range may also result in unintended and/or inaccurate operation and/or possible permanent damage to the EVM and/or interface electronics. Please consult the EVM user guide prior to connecting any load to the EVM output. If there is uncertainty as to the load specification, please contact a TI field representative. During normal operation, even with the inputs and outputs kept within the specified allowable ranges, some circuit components may have elevated case temperatures. These components include but are not limited to linear regulators, switching transistors, pass transistors, current sense resistors, and heat sinks, which can be identified using the information in the associated documentation. When working with the EVM, please be aware that the EVM may become very warm.

4.3.2 EVMs are intended solely for use by technically qualified, professional electronics experts who are familiar with the dangers and application risks associated with handling electrical mechanical components, systems, and subsystems. User assumes all responsibility and liability for proper and safe handling and use of the EVM by User or its employees, affiliates, contractors or designees. User assumes all responsibility and liability to ensure that any interfaces (electronic and/or mechanical) between the EVM and any human body are designed with suitable isolation and means to safely limit accessible leakage currents to minimize the risk of electrical shock hazard. User assumes all responsibility and liability for any improper or unsafe handling or use of the EVM by User or its employees, affiliates, contractors or designees.

4.4 User assumes all responsibility and liability to determine whether the EVM is subject to any applicable international, federal, state, or local laws and regulations related to User's handling and use of the EVM and, if applicable, User assumes all responsibility and liability for compliance in all respects with such laws and regulations. User assumes all responsibility and liability for proper disposal and recycling of the EVM consistent with all applicable international, federal, state, and local requirements.

5. *Accuracy of Information:* To the extent TI provides information on the availability and function of EVMs, TI attempts to be as accurate as possible. However, TI does not warrant the accuracy of EVM descriptions, EVM availability or other information on its websites as accurate, complete, reliable, current, or error-free.

6. *Disclaimers:*

   6.1 EXCEPT AS SET FORTH ABOVE, EVMS AND ANY MATERIALS PROVIDED WITH THE EVM (INCLUDING, BUT NOT LIMITED TO, REFERENCE DESIGNS AND THE DESIGN OF THE EVM ITSELF) ARE PROVIDED "AS IS" AND "WITH ALL FAULTS." TI DISCLAIMS ALL OTHER WARRANTIES, EXPRESS OR IMPLIED, REGARDING SUCH ITEMS, INCLUDING BUT NOT LIMITED TO ANY EPIDEMIC FAILURE WARRANTY OR IMPLIED WARRANTIES OF MERCHANTABILITY OR FITNESS FOR A PARTICULAR PURPOSE OR NON-INFRINGEMENT OF ANY THIRD PARTY PATENTS, COPYRIGHTS, TRADE SECRETS OR OTHER INTELLECTUAL PROPERTY RIGHTS.

   6.2 EXCEPT FOR THE LIMITED RIGHT TO USE THE EVM SET FORTH HEREIN, NOTHING IN THESE TERMS SHALL BE CONSTRUED AS GRANTING OR CONFERRING ANY RIGHTS BY LICENSE, PATENT, OR ANY OTHER INDUSTRIAL OR INTELLECTUAL PROPERTY RIGHT OF TI, ITS SUPPLIERS/LICENSORS OR ANY OTHER THIRD PARTY, TO USE THE EVM IN ANY FINISHED END-USER OR READY-TO-USE FINAL PRODUCT, OR FOR ANY INVENTION, DISCOVERY OR IMPROVEMENT, REGARDLESS OF WHEN MADE, CONCEIVED OR ACQUIRED.

7. *USER'S INDEMNITY OBLIGATIONS AND REPRESENTATIONS.* USER WILL DEFEND, INDEMNIFY AND HOLD TI, ITS LICENSORS AND THEIR REPRESENTATIVES HARMLESS FROM AND AGAINST ANY AND ALL CLAIMS, DAMAGES, LOSSES, EXPENSES, COSTS AND LIABILITIES (COLLECTIVELY, "CLAIMS") ARISING OUT OF OR IN CONNECTION WITH ANY HANDLING OR USE OF THE EVM THAT IS NOT IN ACCORDANCE WITH THESE TERMS. THIS OBLIGATION SHALL APPLY WHETHER CLAIMS ARISE UNDER STATUTE, REGULATION, OR THE LAW OF TORT, CONTRACT OR ANY OTHER LEGAL THEORY, AND EVEN IF THE EVM FAILS TO PERFORM AS DESCRIBED OR EXPECTED.

8. *Limitations on Damages and Liability:*

   8.1 *General Limitations*. IN NO EVENT SHALL TI BE LIABLE FOR ANY SPECIAL, COLLATERAL, INDIRECT, PUNITIVE, INCIDENTAL, CONSEQUENTIAL, OR EXEMPLARY DAMAGES IN CONNECTION WITH OR ARISING OUT OF THESE TERMS OR THE USE OF THE EVMS , REGARDLESS OF WHETHER TI HAS BEEN ADVISED OF THE POSSIBILITY OF SUCH DAMAGES. EXCLUDED DAMAGES INCLUDE, BUT ARE NOT LIMITED TO, COST OF REMOVAL OR REINSTALLATION, ANCILLARY COSTS TO THE PROCUREMENT OF SUBSTITUTE GOODS OR SERVICES, RETESTING, OUTSIDE COMPUTER TIME, LABOR COSTS, LOSS OF GOODWILL, LOSS OF PROFITS, LOSS OF SAVINGS, LOSS OF USE, LOSS OF DATA, OR BUSINESS INTERRUPTION. NO CLAIM, SUIT OR ACTION SHALL BE BROUGHT AGAINST TI MORE THAN TWELVE (12) MONTHS AFTER THE EVENT THAT GAVE RISE TO THE CAUSE OF ACTION HAS OCCURRED.

   8.2 *Specific Limitations.* IN NO EVENT SHALL TI'S AGGREGATE LIABILITY FROM ANY USE OF AN EVM PROVIDED HEREUNDER, INCLUDING FROM ANY WARRANTY, INDEMITY OR OTHER OBLIGATION ARISING OUT OF OR IN CONNECTION WITH THESE TERMS, , EXCEED THE TOTAL AMOUNT PAID TO TI BY USER FOR THE PARTICULAR EVM(S) AT ISSUE DURING THE PRIOR TWELVE (12) MONTHS WITH RESPECT TO WHICH LOSSES OR DAMAGES ARE CLAIMED. THE EXISTENCE OF MORE THAN ONE CLAIM SHALL NOT ENLARGE OR EXTEND THIS LIMIT.

9. *Return Policy.* Except as otherwise provided, TI does not offer any refunds, returns, or exchanges. Furthermore, no return of EVM(s) will be accepted if the package has been opened and no return of the EVM(s) will be accepted if they are damaged or otherwise not in a resalable condition. If User feels it has been incorrectly charged for the EVM(s) it ordered or that delivery violates the applicable order, User should contact TI. All refunds will be made in full within thirty (30) working days from the return of the components(s), excluding any postage or packaging costs.

10. *Governing Law:* These terms and conditions shall be governed by and interpreted in accordance with the laws of the State of Texas, without reference to conflict-of-laws principles. User agrees that non-exclusive jurisdiction for any dispute arising out of or relating to these terms and conditions lies within courts located in the State of Texas and consents to venue in Dallas County, Texas. Notwithstanding the foregoing, any judgment may be enforced in any United States or foreign court, and TI may seek injunctive relief in any United States or foreign court.

Mailing Address: Texas Instruments, Post Office Box 655303, Dallas, Texas 75265
Copyright © 2018, Texas Instruments Incorporated

IMPORTANT NOTICE FOR TI DESIGN INFORMATION AND RESOURCES

Texas Instruments Incorporated ('TI") technical, application or other design advice, services or information, including, but not limited to, reference designs and materials relating to evaluation modules, (collectively, "TI Resources") are intended to assist designers who are developing applications that incorporate TI products; by downloading, accessing or using any particular TI Resource in any way, you (individually or, if you are acting on behalf of a company, your company) agree to use it solely for this purpose and subject to the terms of this Notice.

TI's provision of TI Resources does not expand or otherwise alter TI's applicable published warranties or warranty disclaimers for TI products, and no additional obligations or liabilities arise from TI providing such TI Resources. TI reserves the right to make corrections, enhancements, improvements and other changes to its TI Resources.

You understand and agree that you remain responsible for using your independent analysis, evaluation and judgment in designing your applications and that you have full and exclusive responsibility to assure the safety of your applications and compliance of your applications (and of all TI products used in or for your applications) with all applicable regulations, laws and other applicable requirements. You represent that, with respect to your applications, you have all the necessary expertise to create and implement safeguards that (1) anticipate dangerous consequences of failures, (2) monitor failures and their consequences, and (3) lessen the likelihood of failures that might cause harm and take appropriate actions. You agree that prior to using or distributing any applications that include TI products, you will thoroughly test such applications and the functionality of such TI products as used in such applications. TI has not conducted any testing other than that specifically described in the published documentation for a particular TI Resource.

You are authorized to use, copy and modify any individual TI Resource only in connection with the development of applications that include the TI product(s) identified in such TI Resource. NO OTHER LICENSE, EXPRESS OR IMPLIED, BY ESTOPPEL OR OTHERWISE TO ANY OTHER TI INTELLECTUAL PROPERTY RIGHT, AND NO LICENSE TO ANY TECHNOLOGY OR INTELLECTUAL PROPERTY RIGHT OF TI OR ANY THIRD PARTY IS GRANTED HEREIN, including but not limited to any patent right, copyright, mask work right, or other intellectual property right relating to any combination, machine, or process in which TI products or services are used. Information regarding or referencing third-party products or services does not constitute a license to use such products or services, or a warranty or endorsement thereof. Use of TI Resources may require a license from a third party under the patents or other intellectual property of the third party, or a license from TI under the patents or other intellectual property of TI.

TI RESOURCES ARE PROVIDED "AS IS" AND WITH ALL FAULTS. TI DISCLAIMS ALL OTHER WARRANTIES OR REPRESENTATIONS, EXPRESS OR IMPLIED, REGARDING TI RESOURCES OR USE THEREOF, INCLUDING BUT NOT LIMITED TO ACCURACY OR COMPLETENESS, TITLE, ANY EPIDEMIC FAILURE WARRANTY AND ANY IMPLIED WARRANTIES OF MERCHANTABILITY, FITNESS FOR A PARTICULAR PURPOSE, AND NON-INFRINGEMENT OF ANY THIRD PARTY INTELLECTUAL PROPERTY RIGHTS.

TI SHALL NOT BE LIABLE FOR AND SHALL NOT DEFEND OR INDEMNIFY YOU AGAINST ANY CLAIM, INCLUDING BUT NOT LIMITED TO ANY INFRINGEMENT CLAIM THAT RELATES TO OR IS BASED ON ANY COMBINATION OF PRODUCTS EVEN IF DESCRIBED IN TI RESOURCES OR OTHERWISE. IN NO EVENT SHALL TI BE LIABLE FOR ANY ACTUAL, DIRECT, SPECIAL, COLLATERAL, INDIRECT, PUNITIVE, INCIDENTAL, CONSEQUENTIAL OR EXEMPLARY DAMAGES IN CONNECTION WITH OR ARISING OUT OF TI RESOURCES OR USE THEREOF, AND REGARDLESS OF WHETHER TI HAS BEEN ADVISED OF THE POSSIBILITY OF SUCH DAMAGES.

You agree to fully indemnify TI and its representatives against any damages, costs, losses, and/or liabilities arising out of your non-compliance with the terms and provisions of this Notice.

This Notice applies to TI Resources. Additional terms apply to the use and purchase of certain types of materials, TI products and services. These include; without limitation, TI's standard terms for semiconductor products http://www.ti.com/sc/docs/stdterms.htm), evaluation modules, and samples (http://www.ti.com/sc/docs/sampterms.htm).

Mailing Address: Texas Instruments, Post Office Box 655303, Dallas, Texas 75265
Copyright © 2018, Texas Instruments Incorporated