User's Guide for WCSP Packaged bq25100 250-mA Battery Charger EVM

The bq25100 evaluation module (EVM) on PWR654 PCB is a complete charger module for evaluating a compact, flexible, high-efficiency, USB-friendly, linear charge management solution for single-cell, Li-ion and Li-polymer batteries used in wearables and low-power portable applications.

Contents

1 Introduction 2
1.1 bq25100 IC Features 2
1.2 bq25100 EVM - 654 Features 2
1.3 Schematic 2
1.4 I/O Description 3
1.5 Test Points 3
1.6 Control and Key Parameters Setting 4
1.7 Recommended Operating Conditions 4
2 Test Summary 5
2.1 Definitions 5
2.2 Recommended Test Equipment 5
2.3 Recommended Test Equipment Setup 6
2.4 Recommended Test Procedure 7
3 Bill of Materials and Board Layout 9
3.1 Bill of Materials 9
3.2 Board Layout 10

List of Figures

1 bq25100EVM (PWR654) Schematic 2
2 BAT Load (PR1010) Schematic 5
3 Test Setup for bq25100 EVM (PWR654) 6
4 Top Overlay 10
5 Top Solder Mask 10
6 Top Layer 11
7 Bottom Layer 11
8 Bottom Solder Mask 12
9 Drill Drawing 12
10 Board Dimensions 13

Copyright © 2014, Texas Instruments Incorporated

1 Introduction

1.1 bq25100 IC Features

The bq2510x series of devices are highly integrated Li-Ion and Li-Pol linear chargers targeted at space-limited portable applications. It integrates input current sensing, high-accuracy current and voltage regulation, and charge termination into a chipscale package. Key integrated circuit (IC) features include:

- Extremely small package size 0.9 mm x 1.6 mm
- Programmable charge current from below 10 mA to 250 mA
- Programmable termination current down to 1 mA
- Extremely low battery leakage current < 1 µA
- 30 V maximum input voltage rating

For details, see the bq2510x data sheet (SLUSBV8).

1.2 bq25100 EVM - 654 Features

The bq25100 EVM on PWR654 PCB is a complete charger module for evaluating compact, flexible, high-efficiency, USB-friendly, linear battery charge solution for single-cell, Li-ion and Li-polymer battery-powered systems used in wearables and low-power portable applications. Key EVM features include:

- Programmable charge current, pre_charge/termination current
- IN operating range of 4.45 to 6.45 V
- LED indication for status signals
- Test points for key signals available for testing purposes; easy probe hook-up

1.3 Schematic

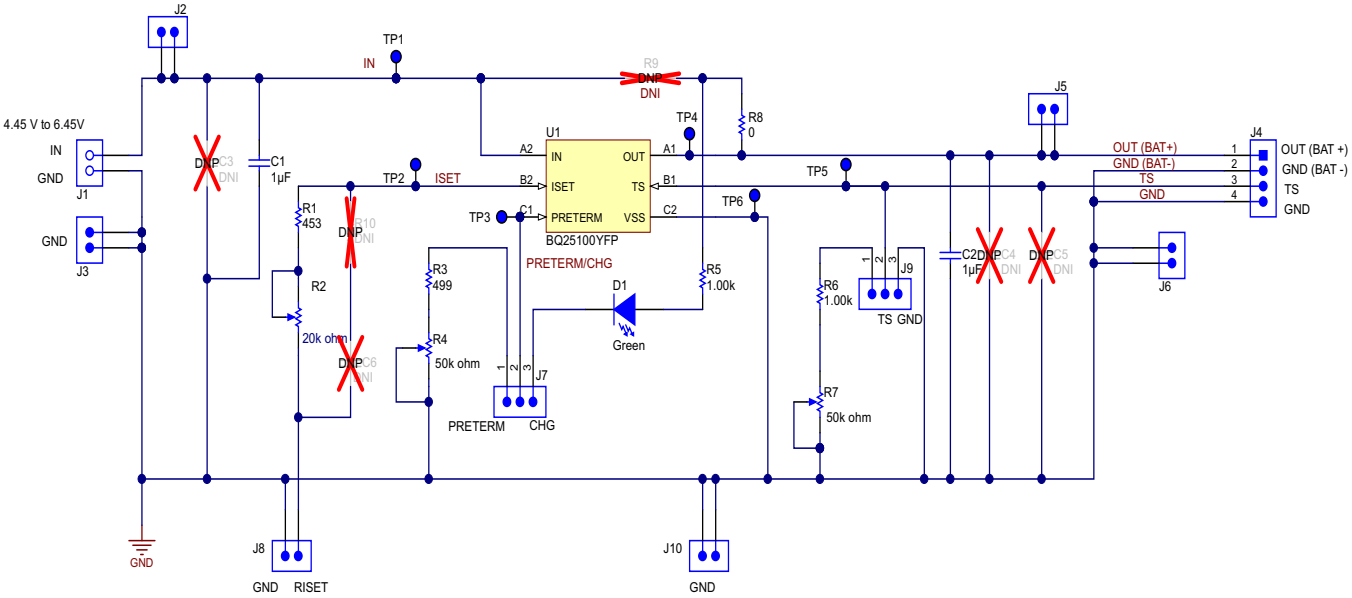

Figure 1. bq25100EVM (PWR654) Schematic

Copyright © 2014, Texas Instruments Incorporated

1.4 I/O Description

Header or Terminal Block	Description
J1-IN/GND	Terminal block for connecting IN and GND pins to input supply positive and negative connections
J2-IN	Headers for extra connections to IN pin
J3-GND	Headers for GND
J4-OUT/TS	Terminal block for connecting BAT and GND pins to battery positive and negative connections
J5-OUT	Headers for extra connections to OUT pin
J6-GND	Headers for connecting GND pin to battery or measurement device negative connection
J7-Preterm/CHG	Headers for connecting PRETERM pin to external Preterm resistor or external LED for /CHG
J8-ISET	Headers for connecting ISET pin to external resistor or GND
J9-TS/GND	Headers for connecting TS pin to battery NTC or ground connections
J10-GND	Headers for connecting GND pin to battery or measurement device negative connection

1.5 Test Points

Test Point	Description
TP1	Test point connecting to IN pin
TP2	Test point connecting to ISET pin
TP3	Test point connecting to PRETERM pin
TP4	Test point connecting to OUT pin
TP5	Test point connecting to TS pin
TP6	Test point connecting to VSS pin

Copyright © 2014, Texas Instruments Incorporated

1.6 Control and Key Parameters Setting

IC	Jumper	Description	Default Factory Setting
All	JP1	Connects IN and GND to the positive and negative connection of the input power source	N/A
All	JP2	Not used	N/A
All	JP3	Not used	N/A
All	JP4	Connects BAT and GND pins to battery positive and negative connections	N/A
All	JP5	Not used	N/A
All	JP6	Not used	N/A
BQ25100/100A /100H/100L	JP7	1-2: (PRETERM/CHG = PRETERM): Connects to external PRETERM resistor to program the pre_charge/termination percentage 2-3: (PRETERM/CHG = /CHG): Connects to external LED to indicate the charge status	1-2 (PRETERM/CHG = PRETERM)
BQ25101/101H	JP7	1-2: (PRETERM/CHG = PRETERM): Connects to external PRETERM resistor to program the pre_charge/termination percentage 2-3: (PRETERM/CHG = /CHG): Connects to external LED to indicate the charge status	2-3 (PRETERM/CHG = /CHG)
All	JP8	Connects the external resistor to ISET pin to program the charge current	Installed
All	J9	1-2: (TS = TS voltage): Connects to programmable voltage to mimic battery NTC 2-3: (TS = GND): Connects to VSS to disable charging	1-2 (TS = TS voltage)
All	J10	Not used	N/A

1.7 Recommended Operating Conditions

			MIN	TYP	MAX	UNIT
V_{IN}	Supply voltage	Operating input voltage from AC adapter (No charging for V_{IN} < VINDPM threshold = 4.4V)	4.45		6.45	V
$I_{IN(MAX)}$	Supply current	Maximum input current limit	0.100		0.25	A
$I_{CHRG(MAX)}$	Max fast charge current	Maximum charging current limit	0.100		0.25	A
T_J	Operating junction temperature range		0		125	°C
$R_{PRETERM}$	Programs pre_charge and termination current thresholds		3		30	kΩ
R_{ISET}	Fast-charge current programming resistor		0.54		13.5	kΩ
R_{TS}	10 k NTC thermistor range without entering BAT_EN or TTDM		1.66		258	kΩ

Copyright © 2014, Texas Instruments Incorporated

2 Test Summary

This procedure describes one test configuration of the bq25100EVM-654 evaluation board for bench evaluation.

2.1 Definitions

The following naming conventions are used;

VXXX :	External voltage supply name (VIN, VUSB)
LOAD#:	External load name
V(TPyyy):	Voltage at internal test point TPyyy. For example, V(TP12) means the voltage at TP12.
V(Jxx):	Voltage at header Jxx
V(XXX, YYY):	Voltage across point XXX and YYY
I(JXX(YYY)):	Current going out from the YYY terminal of header XX
Jxx(BBB):	Terminal or pin BBB of header xx
JPx ON :	Internal jumper Jxx terminals are shorted
JPx OFF:	Internal jumper Jxx terminals are open
JPx (-YY-)	ON: Internal jumper Jxx adjacent terminals marked as YY are shorted
Measure: → A, B	Check specified parameters A, B. If measured values are not within specified limits, the unit under test has failed.
Observe → A, B	Observe if A, B occur. If they do not occur, the unit under test has failed.

Assembly drawings have locations for jumpers, test points, and individual components.

2.2 Recommended Test Equipment

2.2.1 Power Supplies

1. Power supply number 1 (PS#1): a power supply capable of supplying 5 V at 1 A is required
2. Power supply number 2 (PS#2): a power supply capable of supplying 5 V at 1 A is required

2.2.2 Load Number 1 Between BAT and GND

Testing with an actual battery is the best way to verify operation in the system. If a battery is unavailable, then a sourcemeter like a Keithley 2420, capable of both sourcing and sinking current, or a circuit similar to the one shown in Figure 2 can simulate a battery when connected to PS#2.

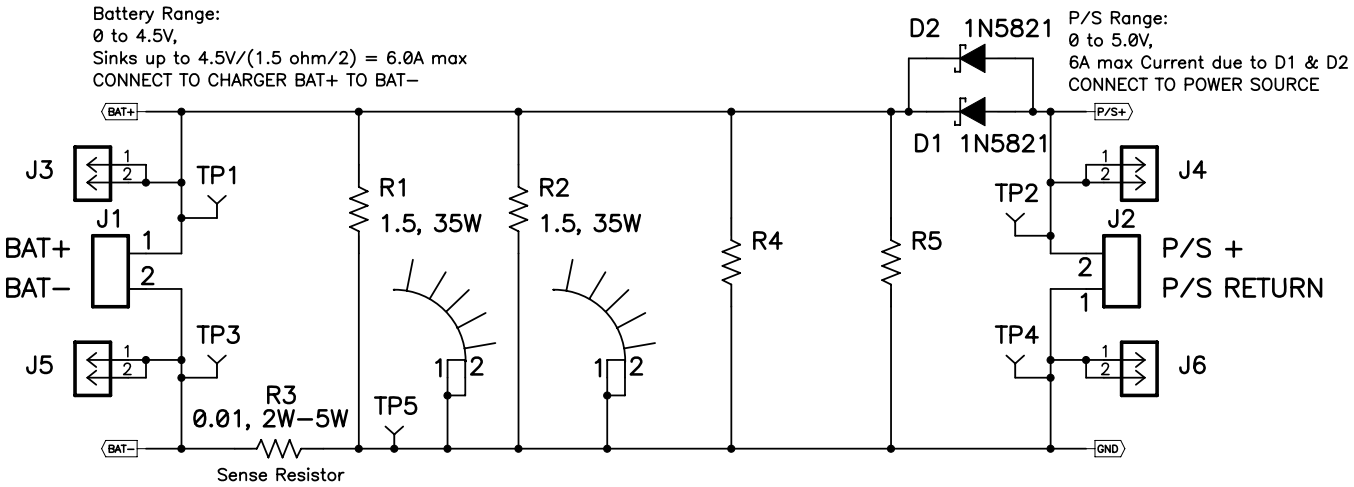

Figure 2. BAT Load (PR1010) Schematic

Copyright © 2014, Texas Instruments Incorporated

2.2.3 Meters

Three equivalent voltage meters (VM#x) and two equivalent current meters (CM#x) are required. The current meters must be able to measure at least 0.5-A current.

2.3 Recommended Test Equipment Setup

1. For all power connections, use short, twisted-pair wires of appropriate gauge wire for the amount of the current.
2. Set PS#1 for 5 V ±100 mV DC, 1-A current limit and then turn off supply.
3. Connect the positive output of PS#1 through a current meter (CM#2) to IN of J1 or J2 and negative output to GND of J1 or J3.
4. Connect a voltage meter (VM#1) across J2 and J3 or TP1 (IN) and TP6 (GND).
5. If BAT_Load (PR1010), as shown in Figure 2, is used, connect PS#2 set to approximately 3.1 V to the input side (PS#2±) of BAT_Load (PR1010), then turn off PS#2.

CAUTION

The heat sinks on PR1010 will be very hot.

6. Connect the output side of the battery or BAT_Load (PR1010) in series with CM#1 to J5 and J6 (BAT, GND). Ensure that VM#2 is connected across J5 or TP4 and J6 or TP6 (BAT, GND).
7. Connect a DMM (VM#3) capable of measuring both voltage and resistance across TP2(ISET) and TP6(GND) or J10(GND).
8. Ensure jumpers are at the default factory settings per Section 1.6.
9. After the preceding steps are accomplished, the test setup for bq25100EVM-654 is as shown in Figure 3.

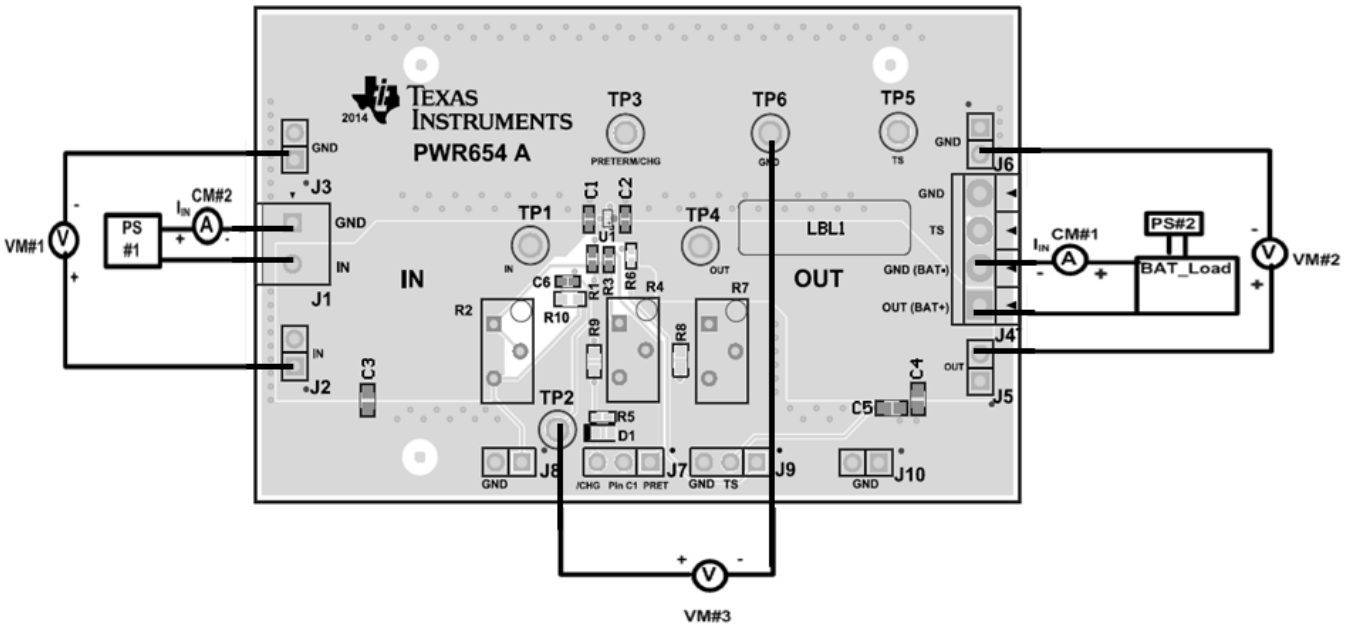

Figure 3. Test Setup for bq25100 EVM (PWR654)

Copyright © 2014, Texas Instruments Incorporated

2.4 Recommended Test Procedure

The following test procedure may be useful for evaluating the charger IC outside of a real system, if no battery is available to connect to the output and a circuit similar to PR1010 is used to simulate a battery.

2.4.1 Test Setup

1. Ensure that the *Section 2.3* steps are followed.
2. Set VM#3 DMM to measure resistance.
3. Turn the potentiometer R2 until:
   Measure on VM#3 → R[TP2(ISET), TP6(GND)] = 1.3 kΩ–1.4 kΩ
4. Move the positive side of VM#3 DMM to TP5 (TS).
5. Turn the potentiometer R7 until:
   Measure on VM#3 → R[TP5(TS), TP6(GND)] = 9 kΩ–11 kΩ
6. Move the positive side of VM#3 DMM to TP3(PRETERM).
7. Turn the potentiometer R4 until
   Measure on VM#3 → R[TP3(PRETERM), TP6(GND)] = 5.5 kΩ–6.5 kΩ
8. Move the positive side of VM#3 DMM to TP2 (ISET).
9. Set VM#3 DMM to measure voltage.
10. Move the shunt on J9 (TS) to GND.
11. Enable PS#1 and PS#2.
12. Measure on VM#3 → V[TP2(ISET), TP6(GND)] < 0.1 V
    Measure on CM#1 → ICHRG ≤ 0–5 mA
    Measure on CM#2 → IIN ≤ 10 mA
13. Disable PS#1 and PS#2.
14. Move the shunt on J9 (TS) to pin1 of the jumper.
15. Enable PS#1 and PS#2.
16. Adjust PS#2 so that the voltage measured by VM#2, across BAT and GND, measures 3.0 V–3.5 V.
17. Adjust the PS#1 so that VM#1 still reads 5.0 V ±100 mV
    Measure on VM#3 → V[TP2(ISET), TP6(GND)] = 1.45–1.55 V
    Measure on CM#1 → ICHRG = 90–100 mA
    Measure on CM#2 → IIN = 93–113 mA
18. Disable PS#1 and PS#2.
19. Disable all power supplies and remove all connections being careful not to disturb the potentiometer settings.

Copyright © 2014, Texas Instruments Incorporated

2.4.2 Helpful Hints

1. The leads and cables to the various power supplies have resistance. The current meters also have series resistance. Therefore, voltmeters must be used to measure the voltage as close to the IC pins as possible instead of relying on each supply's digital measurement.
2. When using a sourcemeter as your battery simulator, it is highly recommended to configure the sourcemeter for 4-wire sensing, eliminating the need for a separate voltmeter to measure the voltage at the OUT pin.
3. To observe the taper current as the battery voltage approaches the set regulation voltage, allow the battery to charge, or if using BAT_Load (PR1010), slowly increase the PS#2 voltage powering BAT_Load (PR1010). Use VM#2 across OUT and GND to measure the battery voltage seen by the IC.
4. For precise measurements of charge current and battery regulation near termination, remove the current meter in series with the battery or battery simulator. An alternate method for measuring charge current is to either use an oscilloscope with hall effect current probe or place a 1% or better, thermally capable (for example, 0.010 Ω in 1210 or larger footprint) resistor in series between the OUT or GND pins and battery and measure the voltage across that resistor. PR1010 resistor R3 is such a resistor.
5. To observe the V_{INDPM} function, lower the current limit on PS#1 (with 3.1 V < VBAT < 4.2 V).

Copyright © 2014, Texas Instruments Incorporated

3 Bill of Materials and Board Layout

3.1 Bill of Materials

Table 1. Bill of Materials – PWR654A

Designator	Qty	Value	Description	Package Reference	Part Number	Manufacturer	Alternate Part Number	Alternate Manufacturer
C1	1	1uF	CAP, CERM, 1uF, 35V, +/-10%, JB, 0402	0402	C1005JB1V105K050BC	TDK		
C2	1	1uF	CAP, CERM, 1uF, 10V, +/-10%, X5R, 0402	0402	GRM155R61A105KE15D	MuRata		
D1	1	Green	LED, Green, SMD	1.6x0.8x0.8mm	LTST-C190GKT	Lite-On		
J1	1	2x1	Conn Term Block, 2POS, 3.81mm, TH	PhoenixConact_1727010	1727010	Phoenix Contact		
J2, J3, J5, J6, J8, J10	6		Header, TH, 100mil, 2x1, Gold plated, 230 mil above insulator	TSW-102-07-G-S	TSW-102-07-G-S	Samtec, Inc.		
J4	1		Terminal Block, 6A, 3.5mm Pitch, 4-Pos, TH	14x8.2x6.5mm	ED555/4DS	On-Shore Technology		
J7, J9	2		Header, TH, 100mil, 3x1, Gold plated, 230 mil above insulator	TSW-103-07-G-S	TSW-103-07-G-S	Samtec, Inc.		
LBL1	1		Thermal Transfer Printable Labels, 0.650" W x 0.200" H - 10,000 per roll	PCB Label 0.650"H x 0.200"W	THT-14-423-10	Brady	-	-
R1	1	453	RES, 453 ohm, 1%, 0.063W, 0402	0402	CRCW0402453RFKED	Vishay-Dale		
R2	1	20k ohm	TRIMMER, 20K, 0.5W, TH	9.5x10x4.8mm	3296Y-1-203LF	Bourns		
R3	1	499	RES, 499 ohm, 1%, 0.063W, 0402	0402	CRCW0402499RFKED	Vishay-Dale		
R4, R7	2		TRIMMER, 50k ohm, 0.5W, TH	9.5x10x4.8mm	3296Y-1-503LF	Bourns		
R5, R6	2	1.00k	RES, 1.00k ohm, 1%, 0.063W, 0402	0402	CRCW04021K00FKED	Vishay-Dale		
R8	1	0	RES, 0 ohm, 5%, 0.1W, 0603	0603	CRCW06030000Z0EA	Vishay-Dale		
SH-JP1, SH-JP2, SH-JP3	3	1x2	Shunt, 100mil, Gold plated, Black	Shunt	969102-0000-DA	3M	SNT-100-BK-G	Samtec
TP1, TP2, TP3, TP4, TP5, TP6	6	Blue	Test Point, TH, Compact, Blue	Keystone5122	5122	Keystone		
U1	1		250 mA Single-Input, Single Cell Li-Ion Battery Chargers, YFP0006AFAV	YFP0006AFAV	BQ25100YFP	Texas Instruments		None
C3, C4, C5	0	1uF	CAP, CERM, 1uF, 35V, +/-10%, X5R, 0603	0603	GMK107BJ105KA-T	Taiyo Yuden		
C6	0	0.01uF	CAP, CERM, 0.01uF, 100V, +/-5%, X7R, 0603	0603	06031C103JAT2A	AVX		
R9	0	0	RES, 0 ohm, 5%, 0.1W, 0603	0603	CRCW06030000Z0EA	Vishay-Dale		
R10	0		RES, 1.00k ohm, 1%, 0.063W, 0402	0402	CRCW04021K00FKED	Vishay-Dale		

Copyright © 2014, Texas Instruments Incorporated

3.2 Board Layout

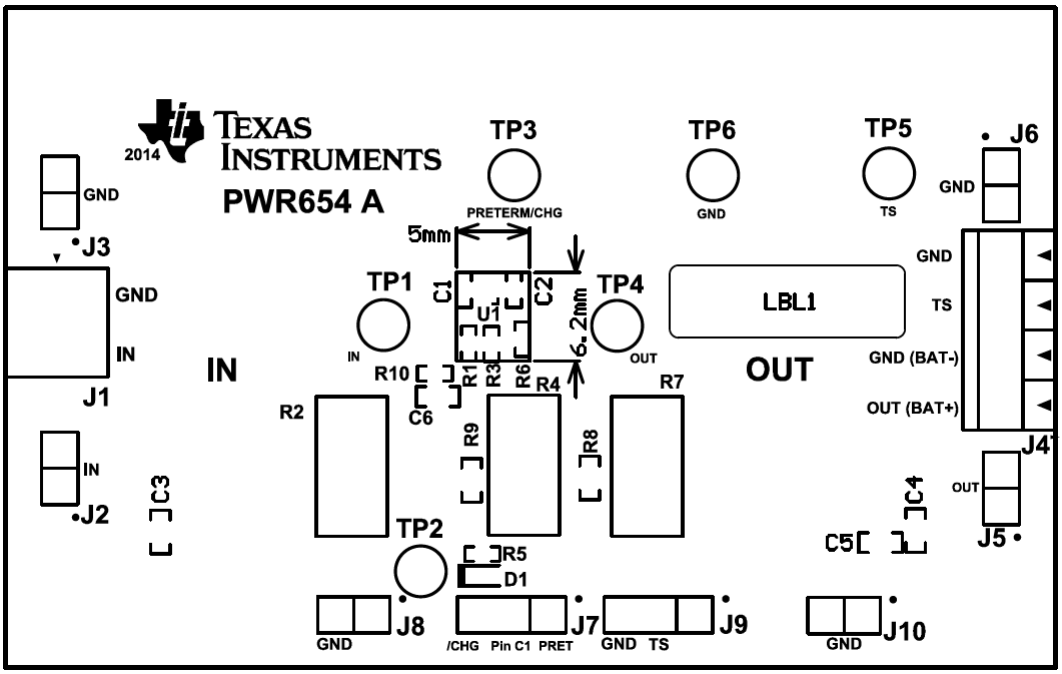

Figure 4. Top Overlay

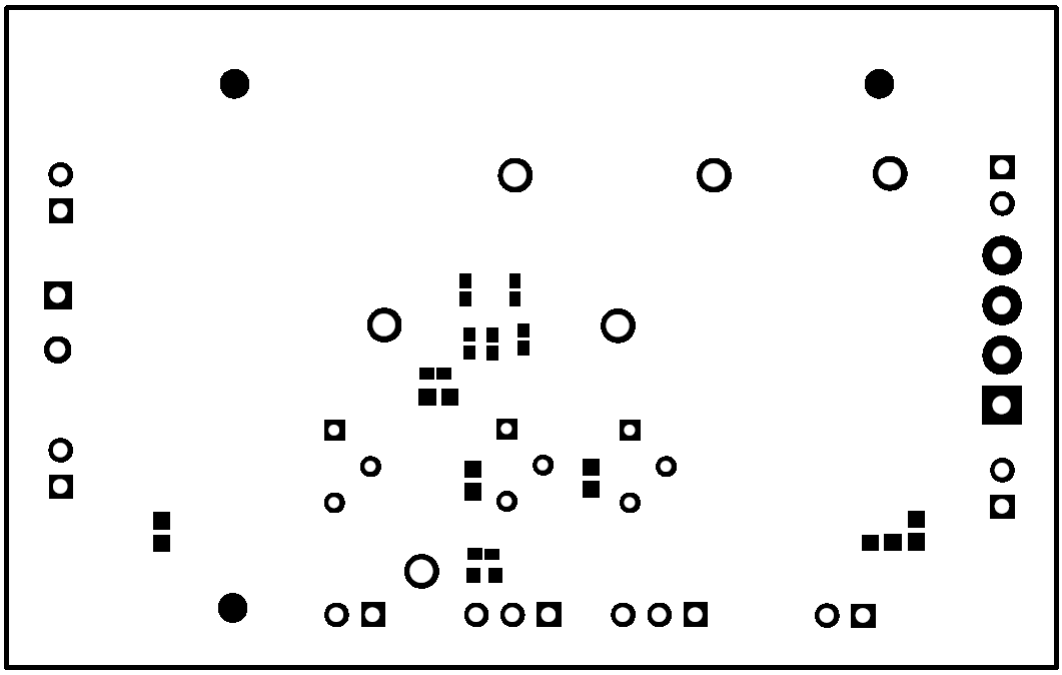

Figure 5. Top Solder Mask

Copyright © 2014, Texas Instruments Incorporated

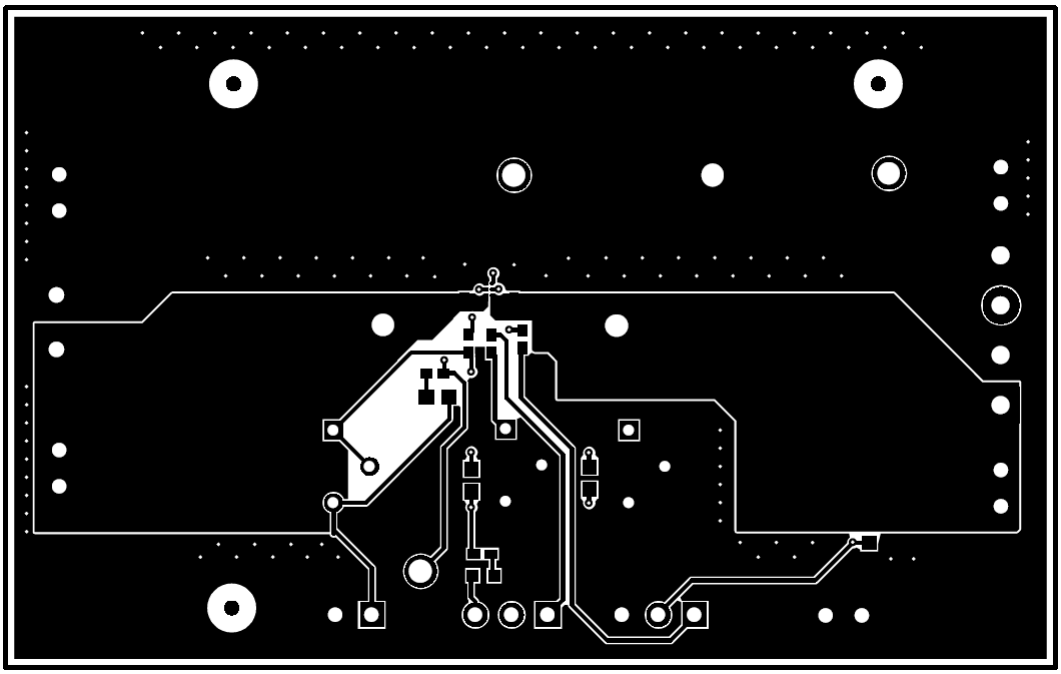

Figure 6. Top Layer

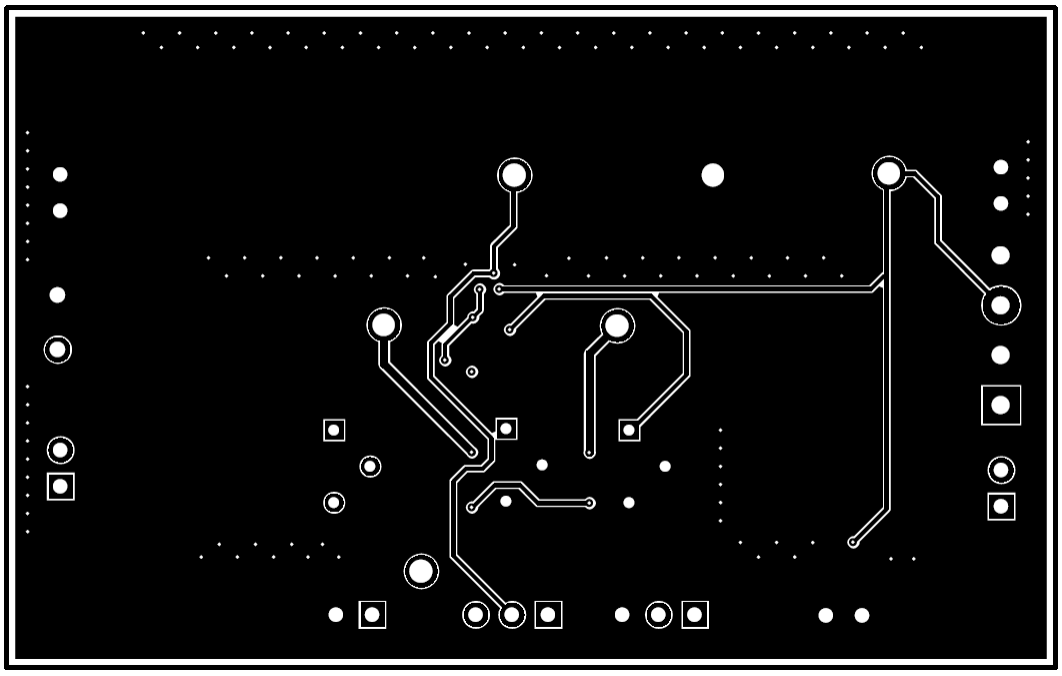

Figure 7. Bottom Layer

Copyright © 2014, Texas Instruments Incorporated

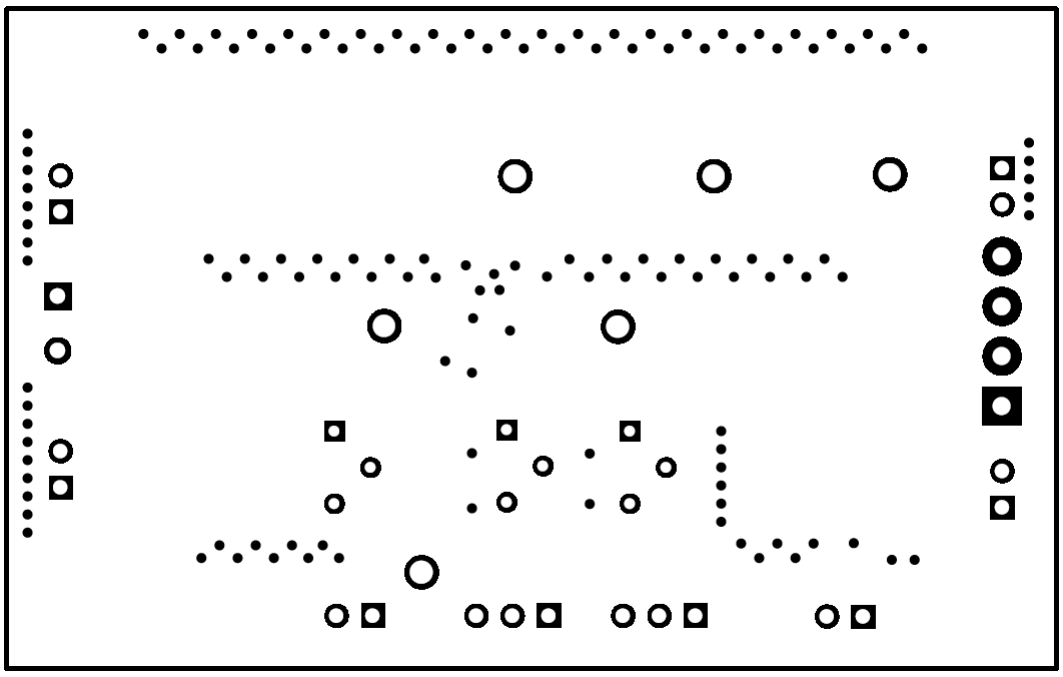

Figure 8. Bottom Solder Mask

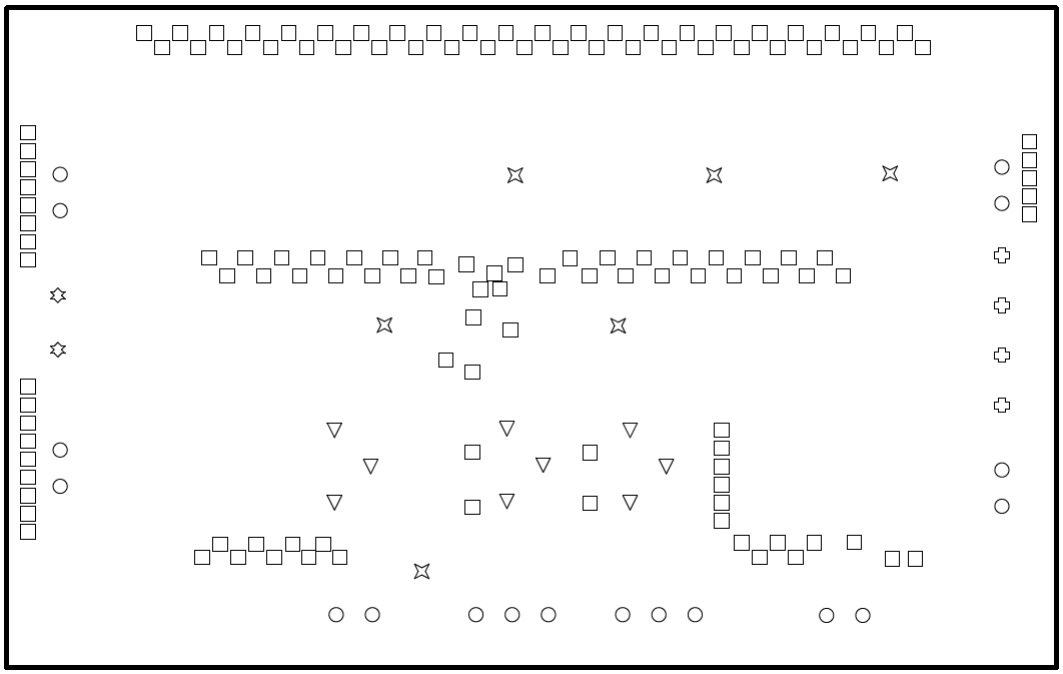

Figure 9. Drill Drawing

Copyright © 2014, Texas Instruments Incorporated

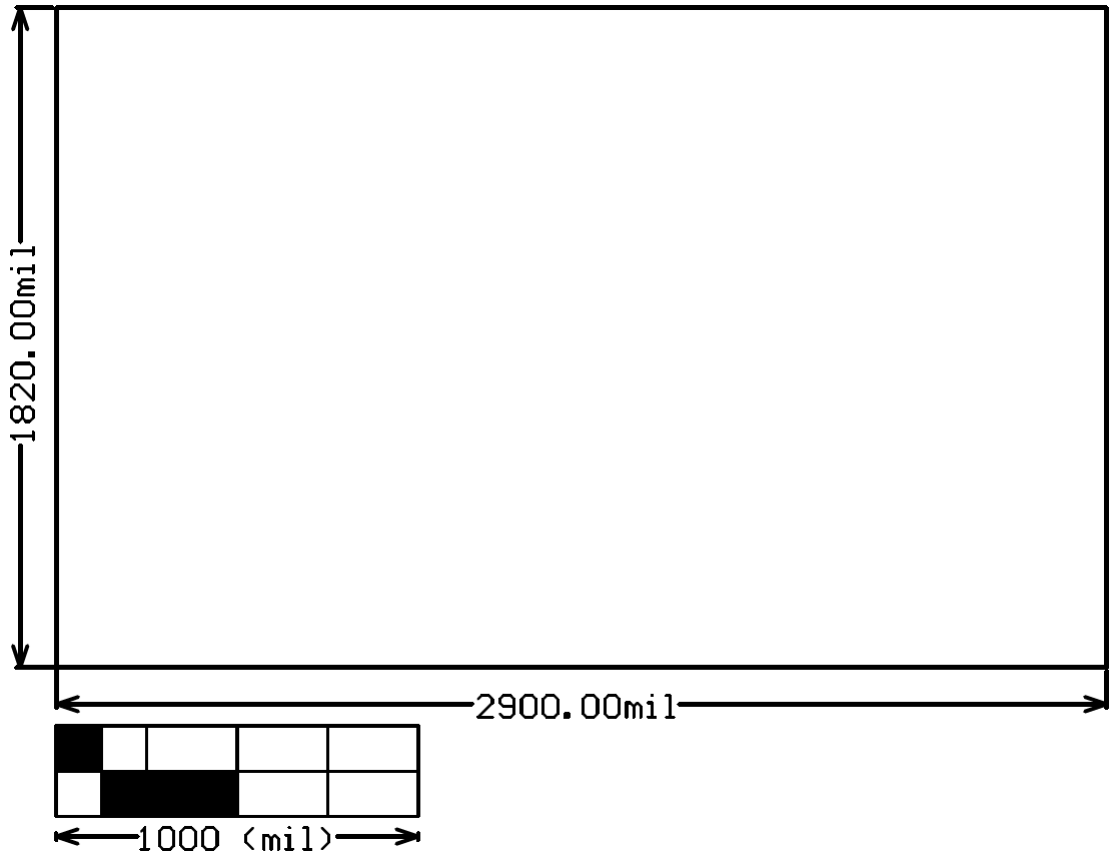

Figure 10. Board Dimensions

Copyright © 2014, Texas Instruments Incorporated

ADDITIONAL TERMS AND CONDITIONS, WARNINGS, RESTRICTIONS, AND DISCLAIMERS FOR EVALUATION MODULES

Texas Instruments Incorporated (TI) markets, sells, and loans all evaluation boards, kits, and/or modules (EVMs) pursuant to, and user expressly acknowledges, represents, and agrees, and takes sole responsibility and risk with respect to, the following:

1. User agrees and acknowledges that EVMs are intended to be handled and used for feasibility evaluation only in laboratory and/or development environments. Notwithstanding the foregoing, in certain instances, TI makes certain EVMs available to users that do not handle and use EVMs solely for feasibility evaluation only in laboratory and/or development environments, but may use EVMs in a hobbyist environment. All EVMs made available to hobbyist users are FCC certified, as applicable. Hobbyist users acknowledge, agree, and shall comply with all applicable terms, conditions, warnings, and restrictions in this document and are subject to the disclaimer and indemnity provisions included in this document.
2. Unless otherwise indicated, EVMs are not finished products and not intended for consumer use. EVMs are intended solely for use by technically qualified electronics experts who are familiar with the dangers and application risks associated with handling electrical mechanical components, systems, and subsystems.
3. User agrees that EVMs shall not be used as, or incorporated into, all or any part of a finished product.
4. User agrees and acknowledges that certain EVMs may not be designed or manufactured by TI.
5. User must read the user's guide and all other documentation accompanying EVMs, including without limitation any warning or restriction notices, prior to handling and/or using EVMs. Such notices contain important safety information related to, for example, temperatures and voltages. For additional information on TI's environmental and/or safety programs, please visit www.ti.com/esh or contact TI.
6. User assumes all responsibility, obligation, and any corresponding liability for proper and safe handling and use of EVMs.
7. Should any EVM not meet the specifications indicated in the user's guide or other documentation accompanying such EVM, the EVM may be returned to TI within 30 days from the date of delivery for a full refund. THE FOREGOING LIMITED WARRANTY IS THE EXCLUSIVE WARRANTY MADE BY TI TO USER AND IS IN LIEU OF ALL OTHER WARRANTIES, EXPRESSED, IMPLIED, OR STATUTORY, INCLUDING ANY WARRANTY OF MERCHANTABILITY OR FITNESS FOR ANY PARTICULAR PURPOSE. TI SHALL NOT BE LIABLE TO USER FOR ANY INDIRECT, SPECIAL, INCIDENTAL, OR CONSEQUENTIAL DAMAGES RELATED TO THE HANDLING OR USE OF ANY EVM.
8. No license is granted under any patent right or other intellectual property right of TI covering or relating to any machine, process, or combination in which EVMs might be or are used. TI currently deals with a variety of customers, and therefore TI's arrangement with the user is not exclusive. TI assumes no liability for applications assistance, customer product design, software performance, or infringement of patents or services with respect to the handling or use of EVMs.
9. User assumes sole responsibility to determine whether EVMs may be subject to any applicable federal, state, or local laws and regulatory requirements (including but not limited to U.S. Food and Drug Administration regulations, if applicable) related to its handling and use of EVMs and, if applicable, compliance in all respects with such laws and regulations.
10. User has sole responsibility to ensure the safety of any activities to be conducted by it and its employees, affiliates, contractors or designees, with respect to handling and using EVMs. Further, user is responsible to ensure that any interfaces (electronic and/or mechanical) between EVMs and any human body are designed with suitable isolation and means to safely limit accessible leakage currents to minimize the risk of electrical shock hazard.
11. User shall employ reasonable safeguards to ensure that user's use of EVMs will not result in any property damage, injury or death, even if EVMs should fail to perform as described or expected.
12. User shall be solely responsible for proper disposal and recycling of EVMs consistent with all applicable federal, state, and local requirements.

Certain Instructions. User shall operate EVMs within TI's recommended specifications and environmental considerations per the user's guide, accompanying documentation, and any other applicable requirements. Exceeding the specified ratings (including but not limited to input and output voltage, current, power, and environmental ranges) for EVMs may cause property damage, personal injury or death. If there are questions concerning these ratings, user should contact a TI field representative prior to connecting interface electronics including input power and intended loads. Any loads applied outside of the specified output range may result in unintended and/or inaccurate operation and/or possible permanent damage to the EVM and/or interface electronics. Please consult the applicable EVM user's guide prior to connecting any load to the EVM output. If there is uncertainty as to the load specification, please contact a TI field representative. During normal operation, some circuit components may have case temperatures greater than 60°C as long as the input and output are maintained at a normal ambient operating temperature. These components include but are not limited to linear regulators, switching transistors, pass transistors, and current sense resistors which can be identified using EVMs' schematics located in the applicable EVM user's guide. When placing measurement probes near EVMs during normal operation, please be aware that EVMs may become very warm. As with all electronic evaluation tools, only qualified personnel knowledgeable in electronic measurement and diagnostics normally found in development environments should use EVMs.

Agreement to Defend, Indemnify and Hold Harmless. User agrees to defend, indemnify, and hold TI, its directors, officers, employees, agents, representatives, affiliates, licensors and their representatives harmless from and against any and all claims, damages, losses, expenses, costs and liabilities (collectively, "Claims") arising out of, or in connection with, any handling and/or use of EVMs. User's indemnity shall apply whether Claims arise under law of tort or contract or any other legal theory, and even if EVMs fail to perform as described or expected.

Safety-Critical or Life-Critical Applications. If user intends to use EVMs in evaluations of safety critical applications (such as life support), and a failure of a TI product considered for purchase by user for use in user's product would reasonably be expected to cause severe personal injury or death such as devices which are classified as FDA Class III or similar classification, then user must specifically notify TI of such intent and enter into a separate Assurance and Indemnity Agreement.

RADIO FREQUENCY REGULATORY COMPLIANCE INFORMATION FOR EVALUATION MODULES

Texas Instruments Incorporated (TI) evaluation boards, kits, and/or modules (EVMs) and/or accompanying hardware that is marketed, sold, or loaned to users may or may not be subject to radio frequency regulations in specific countries.

General Statement for EVMs Not Including a Radio

For EVMs not including a radio and not subject to the U.S. Federal Communications Commission (FCC) or Industry Canada (IC) regulations, TI intends EVMs to be used only for engineering development, demonstration, or evaluation purposes. EVMs are not finished products typically fit for general consumer use. EVMs may nonetheless generate, use, or radiate radio frequency energy, but have not been tested for compliance with the limits of computing devices pursuant to part 15 of FCC or the ICES-003 rules. Operation of such EVMs may cause interference with radio communications, in which case the user at his own expense will be required to take whatever measures may be required to correct this interference.

General Statement for EVMs including a radio

User Power/Frequency Use Obligations: For EVMs including a radio, the radio included in such EVMs is intended for development and/or professional use only in legally allocated frequency and power limits. Any use of radio frequencies and/or power availability in such EVMs and their development application(s) must comply with local laws governing radio spectrum allocation and power limits for such EVMs. It is the user's sole responsibility to only operate this radio in legally acceptable frequency space and within legally mandated power limitations. Any exceptions to this are strictly prohibited and unauthorized by TI unless user has obtained appropriate experimental and/or development licenses from local regulatory authorities, which is the sole responsibility of the user, including its acceptable authorization.

U.S. Federal Communications Commission Compliance

For EVMs Annotated as FCC – FEDERAL COMMUNICATIONS COMMISSION Part 15 Compliant

Caution

This device complies with part 15 of the FCC Rules. Operation is subject to the following two conditions: (1) This device may not cause harmful interference, and (2) this device must accept any interference received, including interference that may cause undesired operation. Changes or modifications could void the user's authority to operate the equipment.

FCC Interference Statement for Class A EVM devices

This equipment has been tested and found to comply with the limits for a Class A digital device, pursuant to part 15 of the FCC Rules. These limits are designed to provide reasonable protection against harmful interference when the equipment is operated in a commercial environment. This equipment generates, uses, and can radiate radio frequency energy and, if not installed and used in accordance with the instruction manual, may cause harmful interference to radio communications. Operation of this equipment in a residential area is likely to cause harmful interference in which case the user will be required to correct the interference at its own expense.

FCC Interference Statement for Class B EVM devices

This equipment has been tested and found to comply with the limits for a Class B digital device, pursuant to part 15 of the FCC Rules. These limits are designed to provide reasonable protection against harmful interference in a residential installation. This equipment generates, uses and can radiate radio frequency energy and, if not installed and used in accordance with the instructions, may cause harmful interference to radio communications. However, there is no guarantee that interference will not occur in a particular installation. If this equipment does cause harmful interference to radio or television reception, which can be determined by turning the equipment off and on, the user is encouraged to try to correct the interference by one or more of the following measures:

- Reorient or relocate the receiving antenna.
- Increase the separation between the equipment and receiver.
- Connect the equipment into an outlet on a circuit different from that to which the receiver is connected.
- Consult the dealer or an experienced radio/TV technician for help.

Industry Canada Compliance (English)

For EVMs Annotated as IC – INDUSTRY CANADA Compliant:

This Class A or B digital apparatus complies with Canadian ICES-003.

Changes or modifications not expressly approved by the party responsible for compliance could void the user's authority to operate the equipment.

Concerning EVMs Including Radio Transmitters

This device complies with Industry Canada licence-exempt RSS standard(s). Operation is subject to the following two conditions: (1) this device may not cause interference, and (2) this device must accept any interference, including interference that may cause undesired operation of the device.

Concerning EVMs Including Detachable Antennas

Under Industry Canada regulations, this radio transmitter may only operate using an antenna of a type and maximum (or lesser) gain approved for the transmitter by Industry Canada. To reduce potential radio interference to other users, the antenna type and its gain should be so chosen that the equivalent isotropically radiated power (e.i.r.p.) is not more than that necessary for successful communication.

This radio transmitter has been approved by Industry Canada to operate with the antenna types listed in the user guide with the maximum permissible gain and required antenna impedance for each antenna type indicated. Antenna types not included in this list, having a gain greater than the maximum gain indicated for that type, are strictly prohibited for use with this device.

Canada Industry Canada Compliance (French)

Cet appareil numérique de la classe A ou B est conforme à la norme NMB-003 du Canada

Les changements ou les modifications pas expressément approuvés par la partie responsable de la conformité ont pu vider l'autorité de l'utilisateur pour actionner l'équipement.

Concernant les EVMs avec appareils radio

Le présent appareil est conforme aux CNR d'Industrie Canada applicables aux appareils radio exempts de licence. L'exploitation est autorisée aux deux conditions suivantes : (1) l'appareil ne doit pas produire de brouillage, et (2) l'utilisateur de l'appareil doit accepter tout brouillage radioélectrique subi, même si le brouillage est susceptible d'en compromettre le fonctionnement.

Concernant les EVMs avec antennes détachables

Conformément à la réglementation d'Industrie Canada, le présent émetteur radio peut fonctionner avec une antenne d'un type et d'un gain maximal (ou inférieur) approuvé pour l'émetteur par Industrie Canada. Dans le but de réduire les risques de brouillage radioélectrique à l'intention des autres utilisateurs, il faut choisir le type d'antenne et son gain de sorte que la puissance isotrope rayonnée équivalente (p.i.r.e.) ne dépasse pas l'intensité nécessaire à l'établissement d'une communication satisfaisante.

Le présent émetteur radio a été approuvé par Industrie Canada pour fonctionner avec les types d'antenne énumérés dans le manuel d'usage et ayant un gain admissible maximal et l'impédance requise pour chaque type d'antenne. Les types d'antenne non inclus dans cette liste, ou dont le gain est supérieur au gain maximal indiqué, sont strictement interdits pour l'exploitation de l'émetteur.

Mailing Address: Texas Instruments, Post Office Box 655303, Dallas, Texas 75265
Copyright © 2014, Texas Instruments Incorporated

Important Notice for Users of EVMs Considered "Radio Frequency Products" in Japan

EVMs entering Japan are NOT certified by TI as conforming to Technical Regulations of Radio Law of Japan.

If user uses EVMs in Japan, user is required by Radio Law of Japan to follow the instructions below with respect to EVMs:

1. Use EVMs in a shielded room or any other test facility as defined in the notification #173 issued by Ministry of Internal Affairs and Communications on March 28, 2006, based on Sub-section 1.1 of Article 6 of the Ministry's Rule for Enforcement of Radio Law of Japan,
2. Use EVMs only after user obtains the license of Test Radio Station as provided in Radio Law of Japan with respect to EVMs, or
3. Use of EVMs only after user obtains the Technical Regulations Conformity Certification as provided in Radio Law of Japan with respect to EVMs. Also, do not transfer EVMs, unless user gives the same notice above to the transferee. Please note that if user does not follow the instructions above, user will be subject to penalties of Radio Law of Japan.

http://www.tij.co.jp

【無線電波を送信する製品の開発キットをお使いになる際の注意事項】 本開発キットは技術基準適合証明を受けておりません。 本製品のご使用に際しては、電波法遵守のため、以下のいずれかの措置を取っていただく必要がありますのでご注意ください。

1. 電波法施行規則第6条第1項第1号に基づく平成18年3月28日総務省告示第173号で定められた電波暗室等の試験設備でご使用いただく。
2. 実験局の免許を取得後ご使用いただく。
3. 技術基準適合証明を取得後ご使用いただく。。

なお、本製品は、上記の「ご使用にあたっての注意」を譲渡先、移転先に通知しない限り、譲渡、移転できないものとします

上記を遵守頂けない場合は、電波法の罰則が適用される可能性があることをご留意ください。

日本テキサス・インスツルメンツ株式会社
東京都新宿区西新宿６丁目２４番１号
西新宿三井ビル
http://www.tij.co.jp

Texas Instruments Japan Limited
(address) 24-1, Nishi-Shinjuku 6 chome, Shinjuku-ku, Tokyo, Japan

IMPORTANT NOTICE

Texas Instruments Incorporated and its subsidiaries (TI) reserve the right to make corrections, enhancements, improvements and other changes to its semiconductor products and services per JESD46, latest issue, and to discontinue any product or service per JESD48, latest issue. Buyers should obtain the latest relevant information before placing orders and should verify that such information is current and complete. All semiconductor products (also referred to herein as “components”) are sold subject to TI’s terms and conditions of sale supplied at the time of order acknowledgment.

TI warrants performance of its components to the specifications applicable at the time of sale, in accordance with the warranty in TI’s terms and conditions of sale of semiconductor products. Testing and other quality control techniques are used to the extent TI deems necessary to support this warranty. Except where mandated by applicable law, testing of all parameters of each component is not necessarily performed.

TI assumes no liability for applications assistance or the design of Buyers’ products. Buyers are responsible for their products and applications using TI components. To minimize the risks associated with Buyers’ products and applications, Buyers should provide adequate design and operating safeguards.

TI does not warrant or represent that any license, either express or implied, is granted under any patent right, copyright, mask work right, or other intellectual property right relating to any combination, machine, or process in which TI components or services are used. Information published by TI regarding third-party products or services does not constitute a license to use such products or services or a warranty or endorsement thereof. Use of such information may require a license from a third party under the patents or other intellectual property of the third party, or a license from TI under the patents or other intellectual property of TI.

Reproduction of significant portions of TI information in TI data books or data sheets is permissible only if reproduction is without alteration and is accompanied by all associated warranties, conditions, limitations, and notices. TI is not responsible or liable for such altered documentation. Information of third parties may be subject to additional restrictions.

Resale of TI components or services with statements different from or beyond the parameters stated by TI for that component or service voids all express and any implied warranties for the associated TI component or service and is an unfair and deceptive business practice. TI is not responsible or liable for any such statements.

Buyer acknowledges and agrees that it is solely responsible for compliance with all legal, regulatory and safety-related requirements concerning its products, and any use of TI components in its applications, notwithstanding any applications-related information or support that may be provided by TI. Buyer represents and agrees that it has all the necessary expertise to create and implement safeguards which anticipate dangerous consequences of failures, monitor failures and their consequences, lessen the likelihood of failures that might cause harm and take appropriate remedial actions. Buyer will fully indemnify TI and its representatives against any damages arising out of the use of any TI components in safety-critical applications.

In some cases, TI components may be promoted specifically to facilitate safety-related applications. With such components, TI’s goal is to help enable customers to design and create their own end-product solutions that meet applicable functional safety standards and requirements. Nonetheless, such components are subject to these terms.

No TI components are authorized for use in FDA Class III (or similar life-critical medical equipment) unless authorized officers of the parties have executed a special agreement specifically governing such use.

Only those TI components which TI has specifically designated as military grade or “enhanced plastic” are designed and intended for use in military/aerospace applications or environments. Buyer acknowledges and agrees that any military or aerospace use of TI components which have ***not*** been so designated is solely at the Buyer's risk, and that Buyer is solely responsible for compliance with all legal and regulatory requirements in connection with such use.

TI has specifically designated certain components as meeting ISO/TS16949 requirements, mainly for automotive use. In any case of use of non-designated products, TI will not be responsible for any failure to meet ISO/TS16949.

Products		**Applications**	
Audio	www.ti.com/audio	Automotive and Transportation	www.ti.com/automotive
Amplifiers	amplifier.ti.com	Communications and Telecom	www.ti.com/communications
Data Converters	dataconverter.ti.com	Computers and Peripherals	www.ti.com/computers
DLP® Products	www.dlp.com	Consumer Electronics	www.ti.com/consumer-apps
DSP	dsp.ti.com	Energy and Lighting	www.ti.com/energy
Clocks and Timers	www.ti.com/clocks	Industrial	www.ti.com/industrial
Interface	interface.ti.com	Medical	www.ti.com/medical
Logic	logic.ti.com	Security	www.ti.com/security
Power Mgmt	power.ti.com	Space, Avionics and Defense	www.ti.com/space-avionics-defense
Microcontrollers	microcontroller.ti.com	Video and Imaging	www.ti.com/video
RFID	www.ti-rfid.com		
OMAP Applications Processors	www.ti.com/omap	**TI E2E Community**	e2e.ti.com
Wireless Connectivity	www.ti.com/wirelessconnectivity		

Mailing Address: Texas Instruments, Post Office Box 655303, Dallas, Texas 75265
Copyright © 2014, Texas Instruments Incorporated