bq24650EVM Synchronous, Switch-Mode, Battery Charge Controller for Solar Power

This user's guide describes the features and operation of the bq24650EVM Evaluation Module (EVM). The EVM assists users in evaluating the bq24650 synchronous battery charger. The EVM is also called the HPA639 A. The manual includes the bq24650EVM bill of materials, board layout, and schematic.

Contents

1 Introduction 1
1.1 Features 1
1.2 General Description 2
1.3 I/O Description 2
1.4 Control and Key Parameters Settings 3
1.5 Recommended Operating Conditions 3
2 Test Summary 5
2.1 Definitions 5
2.2 Safety 5
2.3 Quality 5
2.4 Apparel 5
2.5 Equipment 5
2.6 Equipment Setup 6
2.7 Procedure 7
3 PCB Layout Guideline 9
4 Bill of Materials, Board Layout, and Schematic 10
4.1 Board Layout 11

List of Figures

1 Original Test Setup for HPA639 A Evaluation Board 6
2 Top Layer 11
3 Second Layer 12
4 Third Layer 13
5 Bottom Layer 14
6 Top Assembly 15
7 Bottom Assembly 16
8 bq24650EVM Schematic 17

List of Tables

1 I/O Description 2
2 Control and Key Parameters Settings 3
3 Recommended Operating Conditions 3

1 Introduction

1.1 Features

- Synchronous switch-mode battery charge controller for solar power

Copyright © 2010, Texas Instruments Incorporated

- Resistor-programmable up to 26-V battery voltage
- Input operating range: 5 V–28 V
- LED indication for charge status
- Test points for key signals available for testing purposes; easy probe hook-up.
- Jumpers available; easy-to-change setting

1.2 General Description

The bq24650 is a highly integrated switch-mode battery charge controller. It provides input voltage regulation, which reduces charge current when input voltage falls below a programmed level. When the input is powered by a solar panel, the input regulation loop maintains the panel at maximum power output.

The bq24650 offers a constant-frequency, synchronous PWM controller with high-accuracy current and voltage regulation, charge preconditioning, charge termination, and charge status monitoring.

The bq24650 changes the battery in three phases: preconditioning, constant current, and constant voltage. Charge is terminated when the current reaches one-tenth of the fast charge rate. A programmable fast-charge timer provides a safety backup. The precharge timer is fixed at 30 minutes. The bq24650 automatically restarts the charge cycle if the battery voltage falls below an internal threshold and enters a low, quiescent-current sleep mode when the input voltage falls below the battery voltage.

The bq24650 supports the battery from 2.1 V to 26 V with VFB set to a 2.1-V feedback reference. The charge current is programmed by selecting an appropriate sense resistor. The bq24650 is available in a 16-pin, 3.5x3.5 mm^2, thin QFN package.

For details, see the bq24650 data sheet (SLUSA75).

1.3 I/O Description

Table 1. I/O Description

Jack	Description
J1–VIN	Positive input
J1–PGND	Negative input
J2–VSYS	Connected to system
J2–VOUT	Connected to charger output
J2–PGND	Ground
J2–TS	Temperature qualification voltage Input

Copyright © 2010, Texas Instruments Incorporated

1.4 Control and Key Parameters Settings

Table 2. Control and Key Parameters Settings

Jack	Description	Factory Setting
JP1	Select external TS input or internal valid TS setting 1-2 : External TS input 2-3 : Internal valid TS setting	Jumper ON 1-2 (external TS)
JP2	The pullup power source supplies the LEDs when JP2 ON. LED has no power source when JP2 is OFF.	Jumper ON (LED power available)
JP3	TERM_EN setting 2-3 : Connect TERM_EN to VREF to enable termination 1-2 : Connect TERM_EN to GND to disable termination	Jumper ON 2-3 (enable termination)
JP4	Charger enable/disable setting. MPPSET is pulled to GND and the charger is disabled when JP4 OFF; charger is enabled when JP4 is ON.	Jumper OFF (disable charger)

1.5 Recommended Operating Conditions

Table 3. Recommended Operating Conditions

Symbol	Description	Min	Typ	Max	Unit	Notes
Supply voltage, V_{IN}	Input voltage	5	20	28	V	
Battery voltage, V_{OUT}	Voltage applied at VOUT terminal of J2	2.1	12.6	26	V	
Supply current	Maximum input current	0		8	A	
Charge current, I_{chrg}	Battery charge current	0	2	8	A	For charge current above 2 A, replace R6 and L1 with high-current rating components
Operating junction temperature range, T_J		0		125	°C	

The bq24650EVM board requires a regulated supply approximately 1 V minimum above the regulated voltage of the battery pack to a maximum input voltage of 28 Vdc. The charge voltage is programmed via a resistor divider from the battery to ground, with the midpoint tied to the VFB pin.

R13 and R15 can be changed to regulate output between approximately 2.1 V to 26 V.

$$V_{OUT} = 2.1\ V \times \left(1 + \frac{R13}{R15}\right) \quad (1)$$

It is set at 12.6 Vdc from the factory.

A solar panel has a unique point on the V-I or V-P curve, called the maximum power point (MPP), at which the entire photovoltaic (PV) system operates with maximum efficiency and produces its maximum output power. The constant voltage algorithm is the simplest maximum power point tracking (MPPT) method. The bq24650 automatically reduces charge current, so the maximum power point is maintained for maximum efficiency.

If the solar panel or other input source cannot provide the total power of the system and bq24650 charger, the input voltage drops. Once the voltage sensed on the MPPSET pin drops below 1.2 V, the charger maintains the input voltage by reducing the charge current.

$$V_{MPPSET} = 1.2\ V \times \left(1 + \frac{R17}{R19}\right) \quad (2)$$

It is set at 17.8 Vdc from the factory.

Copyright © 2010, Texas Instruments Incorporated

Battery current is sensed by resistor RSR connected between SRP and SRN. The full-scale differential voltage between SRP and SRN is fixed at 40 mV.

$$I_{CHARGE} = \frac{40\ mV}{R_6} \quad (3)$$

It is set at 2 Adc from the factory.

Copyright © 2010, Texas Instruments Incorporated

2 Test Summary

2.1 Definitions

This procedure details how to configure the HPA639 A evaluation board. The following naming conventions are followed on the test procedure.

VXXX :	External voltage supply name (VADP, VBT, VSBT)
LOADW:	External load name (LOADR, LOADI)
V(TPyyy):	Voltage at internal test point TPyyy. For example, V(TP1) means the voltage at TP1.
V(Jxx):	Voltage at jack terminal Jxx.
V(TP(XXX)):	Voltage at test point XXX. For example, V(MPPSET) means the voltage at the test point which is marked as MPPSET.
V(XXX, YYY):	Voltage across point XXX and YYY.
I(JXX(YYY)):	Current going out from the YYY terminal of jack XX.
Jxx(BBB):	Terminal or pin BBB of jack xx
Jxx ON :	Internal jumper Jxx terminals are shorted
Jxx OFF:	Internal jumper Jxx terminals are open
Jxx (-YY-) ON:	Internal jumper Jxx adjacent terminals marked as YY are shorted
Measure:→A,B	Check specified parameters A, B. If measured values are not within specified limits the unit under test has failed.
Observe: →A,B	Observe if A, B occur. If they do not occur, the unit under test has failed.

Assembly drawings have location for jumpers, test points and individual components.

2.2 Safety

1. Safety Glasses are to be worn.
2. This test must be performed by qualified personnel who are trained in electronics theory and understand the risks and hazards of the assembly to be tested.
3. ESD precautions must be followed while handling electronic assemblies and performing this test.
4. Precautions must be observed to avoid touching areas of the assembly that may get hot or present a shock hazard during testing.

2.3 Quality

1. Test data can be made available on request from Texas Instruments.

2.4 Apparel

1. Electrostatic smock
2. Electrostatic gloves or finger cots
3. Safety glasses
4. Ground ESD wrist strap.

2.5 Equipment

2.5.1 Power Supplies

Power Supply #1 (PS#1): a power supply capable of supplying 30 V at 3 A is required.

Copyright © 2010, Texas Instruments Incorporated

2.5.2 Loads

LOAD#1 A 30-V (or greater), 5-A (or greater) electronic load that can operate at constant current and constant voltage mode.

LOAD#2: An HP 6060B 3-V to 60-V/0A to 60-A, 300-W system dc electronic load or equivalent.

2.5.3 Meters

Seven Fluke 75 multimeters (equivalent or better) or four equivalent voltage meters and three equivalent current meters.

The current meters must be capable of measuring 5-A+ current.

2.6 Equipment Setup

1. Set the power supply #1 (PS#1) for 21-V ±500-mVdc, 2.5-A ±0.1-A current limit, and then turn off supply.
2. Connect the output of PS#1 in series with a current meter (multimeter) to J1 (VIN, PGND).
3. Connect a voltage meter across J1 (VIN, PGND).
4. Connect Load#1 in series with a current meter to J2 (VOUT, PGND). Turn off Load#1.
5. Connect Load#2 in series with a current meter to J2 (VSYS, PGND). Turn off Load#2.
6. Connect a voltage meter across J2 (VOUT, PGND).
7. Connect a voltage meter across J2 (VSYS, PGND).
8. Check all jumper shunts. JP1: connect 1-2 (External TS); JP2: ON; JP3: connect 2-3 (Enable TERM_EN); JP4: OFF.

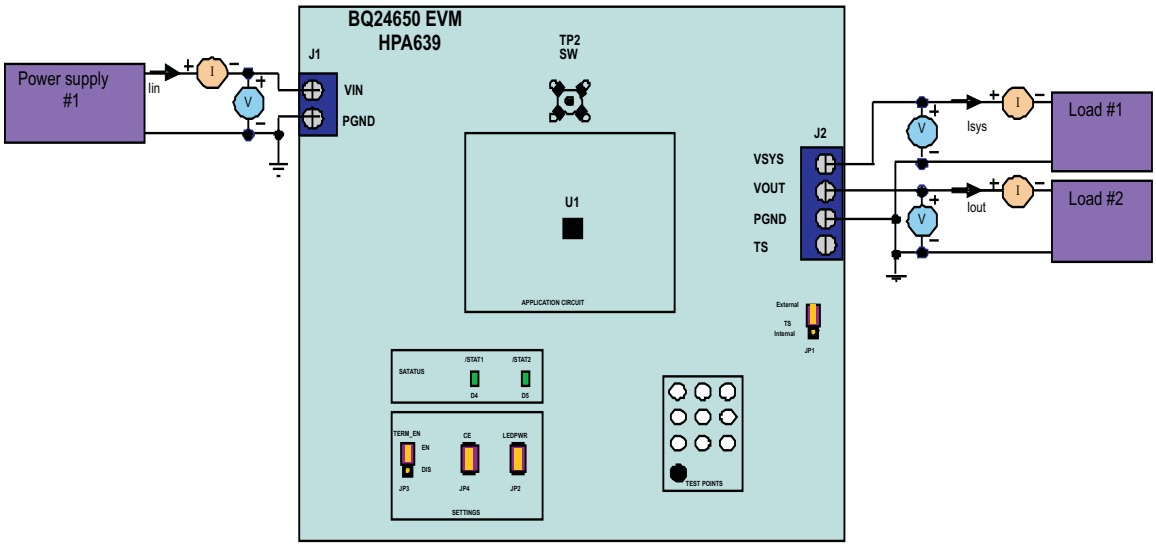

Figure 1. Original Test Setup for HPA639 A Evaluation Board

Copyright © 2010, Texas Instruments Incorporated

2.7 Procedure

2.7.1 Power Supply and VREF

Ensure that Section 2.6 steps are followed.

Disconnect LOAD#1#2. Turn on PS#1.
Measure → V(J2(VSYS)) = 21 V ±500 mV
Measure → V(J2(VOUT)) = 0 V ±500 mV
Measure → V(TP(VREF)) = 3.3 V ±200 mV
Measure → V(TP(REGN)) = 0 V ±200 mV

2.7.2 Charger Enable and Battery Detection

Connect 2-3 of JP1 (Internal TS); Short JP4 (Charger Enable)
Measure → V(TP(VREF)) = 3.3 V ±200 mV
Measure → V(TP(REGN)) = 6 V ±200 mV
Observe → V(J2(VOUT))=12.6 V ±500 mV
Observe → D4 (/STAT1) OFF, D5 (/STAT2) OFF

2.7.3 Charge Current/Voltage Regulation and Battery Temperature Qualification

Reconnect LOAD#2, and turn on. Use the constant voltage mode. Set the output voltage to 8 V.
Measure → I(J2(VOUT)) = 0.2 A ±100 mA
Observe → D4 (/STAT1) ON, D5 (/STAT2) OFF

Increase the voltage of LOAD#2 to be 10.5 V.
Measure → I(J2(VOUT)) = 2 A ±200 mA
Observe → D4 (/STAT1) ON, D5 (/STAT2) OFF

Open 2-3 of JP1
Measure → I(J2(VOUT)) = 0 A ±100 mA
Observe → D4 (/STAT1) OFF, D5 (/STAT2) OFF

Connect 2-3 of JP1 (Internal TS)
Measure → I(J2(VOUT)) = 2 A ±200 mA
Observe → D4 (/STAT1) ON, D5 (/STAT2) OFF

2.7.4 Charger Termination

Increase the voltage of LOAD#2 slowly to approximately 12.6 V.
Observe → I(J2(VOUT)) decreases from 2 A while V(J2(VOUT)) becomes constant.
Observe → I(J2(VOUT)) drops to zero when it is less than 0.2 A.

2.7.5 Maximum Power Point, Input Voltage Regulation

Connect the output of the Load#1 in series with a current meter (multimeter) to J2 (SYS, PGND). Ensure that a voltage meter is connected across J2 (SYS, PGND). Resume other status as in Section 2.7.3. (Short JP1, JP4, set LOAD#2 to 10.5 V.)

Copyright © 2010, Texas Instruments Incorporated

2.7.6 Final Step

Turn on the power of Load#1. Set the load current to 1 A. Increase the load current slowly and observe the following.

Observe → V(J1(VIN)) = 17.8 V ±500 mV.
Keep increasing I(J2(VSYS)),
Observe → I(J2(VOUT)) decreases from 2 A toward 0 A while V(J1(VIN)) become constant 17.8 V ±500 mV. Ensure that I(J2(VOUT))= 0 A ±100 mA and → (J2(VSYS)) = 2.4 A ±200 mA.

2.7.7 Test Complete

Turn off the power supply, and remove all connections from the unit under test.

Copyright © 2010, Texas Instruments Incorporated

3 PCB Layout Guideline

1. It is critical that the exposed thermal pad on the backside of the bq24650 package be soldered to the PCB ground. Ensure that sufficient thermal vias are right underneath the IC, connecting to the ground plane on the other layers.
2. The control stage and the power stage must be routed separately. At each layer, the signal ground and the power ground are connected only at the thermal pad.
3. Charge current sense resistor must be connected to SRP, SRN with a Kelvin contact. The area of this loop must be minimized. The decoupling capacitors for these pins must be placed as close to the IC as possible.
4. Decoupling capacitors for VREF, VCC, REGN must make the interconnections to the IC as short as possible.
5. Decoupling capacitors for BAT must be placed close to the corresponding IC pins, and make the interconnections to the IC as short as possible.
6. Decoupling capacitor(s) for the charger input must be placed close to the Q1A drain and Q1B source.
7. Take the EVM layout for design reference.

Copyright © 2010, Texas Instruments Incorporated

4 Bill of Materials, Board Layout, and Schematic

Bill of Materials

Bill of Materials

001	RefDes	Value	Description	SIZE	PART NUMBER	MFR
3	C1, C2, C7	10 µF	Capacitor, Ceramic, 35V, X7R, 10%	1210	STD	STD
3	C3, C5, C8	1.0 µF	Capacitor, Ceramic, 35V, X7R, 10%	805	STD	STD
1	C4	2.2 µF	Capacitor, Ceramic, 35V, X7R, 20%	1210	STD	STD
3	C6, C11, C12	0.1 µF	Capacitor, Ceramic, 50V, X7R, 10%	603	STD	STD
0	C9, C13	Open	Capacitor, Ceramic, 50V, X7R, 10%	603	STD	STD
2	C10, C16	1.0 µF	Capacitor, Ceramic, 16V, X7R, 10%	805	STD	STD
1	C14	0.1 µF	Capacitor, Ceramic, 16V, X7R, 10%	603	STD	STD
2	C15, C17	22 pF	Capacitor, Ceramic, 50V, X7R, 10%	603	STD	STD
2	D1, D3	PDS1040-13	Diode, 10A 40V Schottky Barrier Rectifier	PowerDI 5	PDS1040-13	Diodes
1	D2	ZLLS350-7	Diode, Schottky, 1.16A, 40-V	SOD-523	ZLLS350-7	Zetex
2	D4, D5	LTST-C190GKT	Diode, LED, Green, 2.1V, 20mA, 6mcd	603	LTST-C190GKT	Lite On
1	J1	ED120/2DS	Terminal Block, 2 pin, 15A, 5.1mm	0.40 x 0.35 inch	ED120/2DS	OST
1	J2	ED120/4DS	Terminal Block, 4 pin, 15A, 5.1mm	0.80 x 0.35 inch	ED120/4DS	OST
2	JP2, JP4	PEC02SAAN	Header, 2 pin, 100mil spacing	0.100 inch x 2	PEC02SAAN	Sullins
2	JP1, JP3	PEC03SAAN	Header, 3 pin, 100mil spacing	0.100 inch x 3	PEC03SAAN	Sullins
1	L1	10 µH	Inductor, SMT, 102mΩ, 7.0A, 20%	0.255 x 0.270 inch	IHLP2525CZER100M01 IHLP2525CZEB100M01	Vishay
1	Q1	Si7288-T1	FET, Dual N Chan, 40V, 20A, 19 mΩ	SO8-PowerPak	SI7288DP-T1	Vishay/ Siliconix
1	Q2	2N7002-7-F	MOSFET, N-ch, 60V, 115mA, 1.2Ω	SOT23	2N7002-7-F	Diodes
2	R1, R2	3.9	Resistor, Chip, 1/4W, 5%	1206	STD	STD
1	R3	10	Resistor, Chip, 1/8W, 5%	805	STD	STD
0	R4, R8	Open	Resistor, Chip, 1/8W, 5%	805	STD	STD
1	R5	2.2	Resistor, Chip, 1/10W, 5%	603	STD	STD
1	R6	0.02	Resistor, Metal Film, 1/4 watt, 0.1%, Axial	1206	WSLP1206R0200FEA	Vishay
2	R7, R10	0	Resistor, Chip, 1/10W, 5%	603	STD	STD
1	R9	5.23K	Resistor, Chip, 1/10W, 1%	603	STD	STD
1	R11	100	Resistor, Chip, 1/10W, 5%	603	STD	STD
1	R12	30.1k	Resistor, Chip, 1/10W, 1%	603	STD	STD
2	R13, R17	499k	Resistor, Chip, 1/10W, 1%	603	STD	STD
1	R14	10k	Resistor, Chip, 1/10W, 5%	603	STD	STD
2	R15, R18	100k	Resistor, Chip, 1/10W, 1%	603	STD	STD
0	R16	Open	Resistor, Chip, 1/10W, 5%	603	STD	STD
2	R20, R21	10k	Resistor, Chip, 1/8W, 5%	805	STD	STD
1	R19	36k	Resistor, Chip, 1/8W, 5%	805	STD	STD
0	TP1, TP3–TP7	Open	Test Point, 0.020 Hole	0.020"	STD	STD
0	TP2	Open	Adaptor, 3.5-mm probe clip (or 131-4244-00)	0.200 inch	131-5031-00	Tektronix
1	U1	BQ24650RVA	IC, High Efficiency Synchronous Switch-Mode Fast Charge Controller for Solar Power	QFN16[RVA]	BQ24650RVA	TI
10	CE, GND, MPPSET, REGN, STAT1, STAT2, TS, TERM_EN, VCC, VREF	TP-5002	Test Point, White, Thru Hole Color Keyed	0.100 x 0.100 inch	5002	Keystone
1	–		PCB, 3 In x 3 In x 0.062 In		HPA639	Any
4			Bumper foot (install after final wash)	0.440 x 0.2	SJ-5303	3M
4			Shunt, 100-mil, Black	0.100	929950-00	3M

Copyright © 2010, Texas Instruments Incorporated

4.1 Board Layout

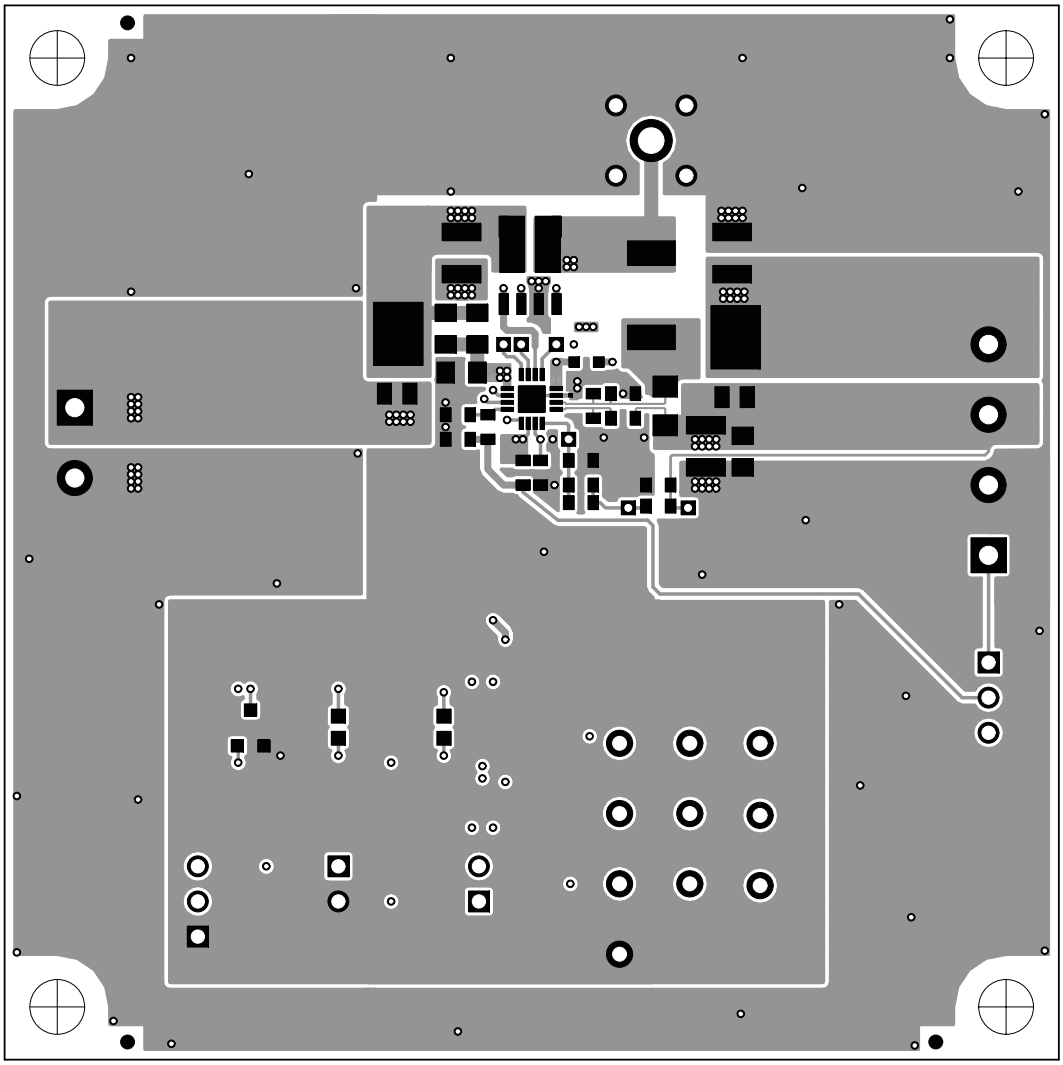

Figure 2. Top Layer

Copyright © 2010, Texas Instruments Incorporated

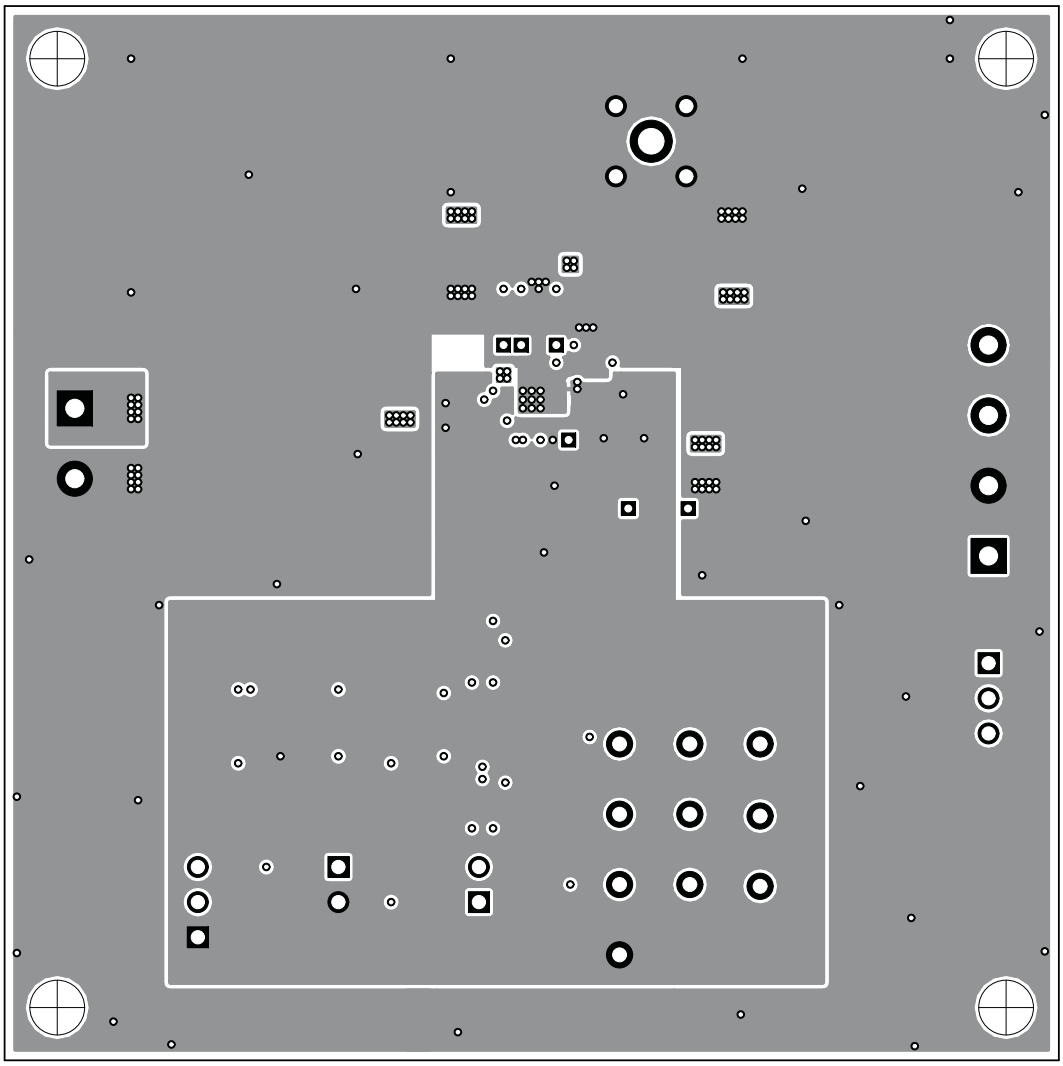

Figure 3. Second Layer

Copyright © 2010, Texas Instruments Incorporated

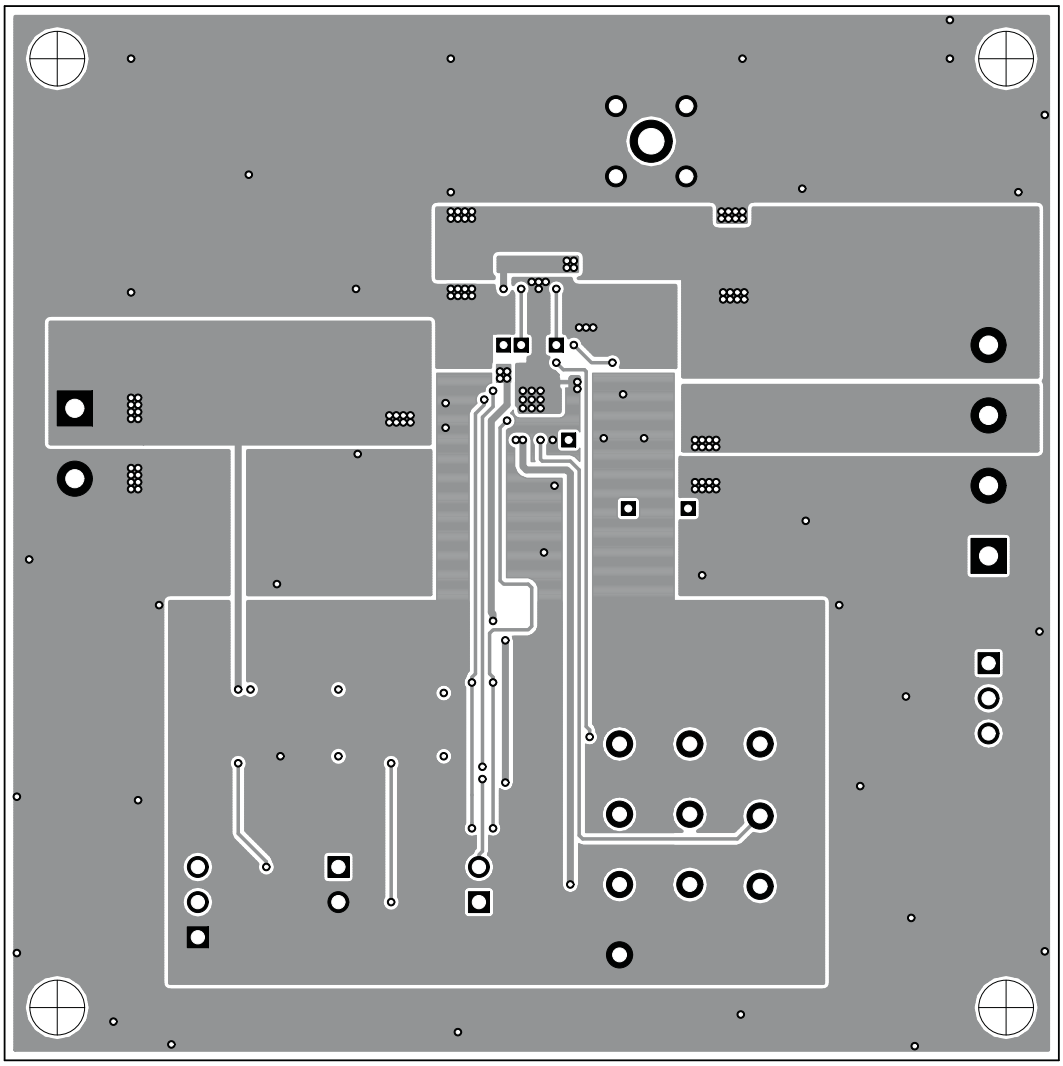

Figure 4. Third Layer

Copyright © 2010, Texas Instruments Incorporated

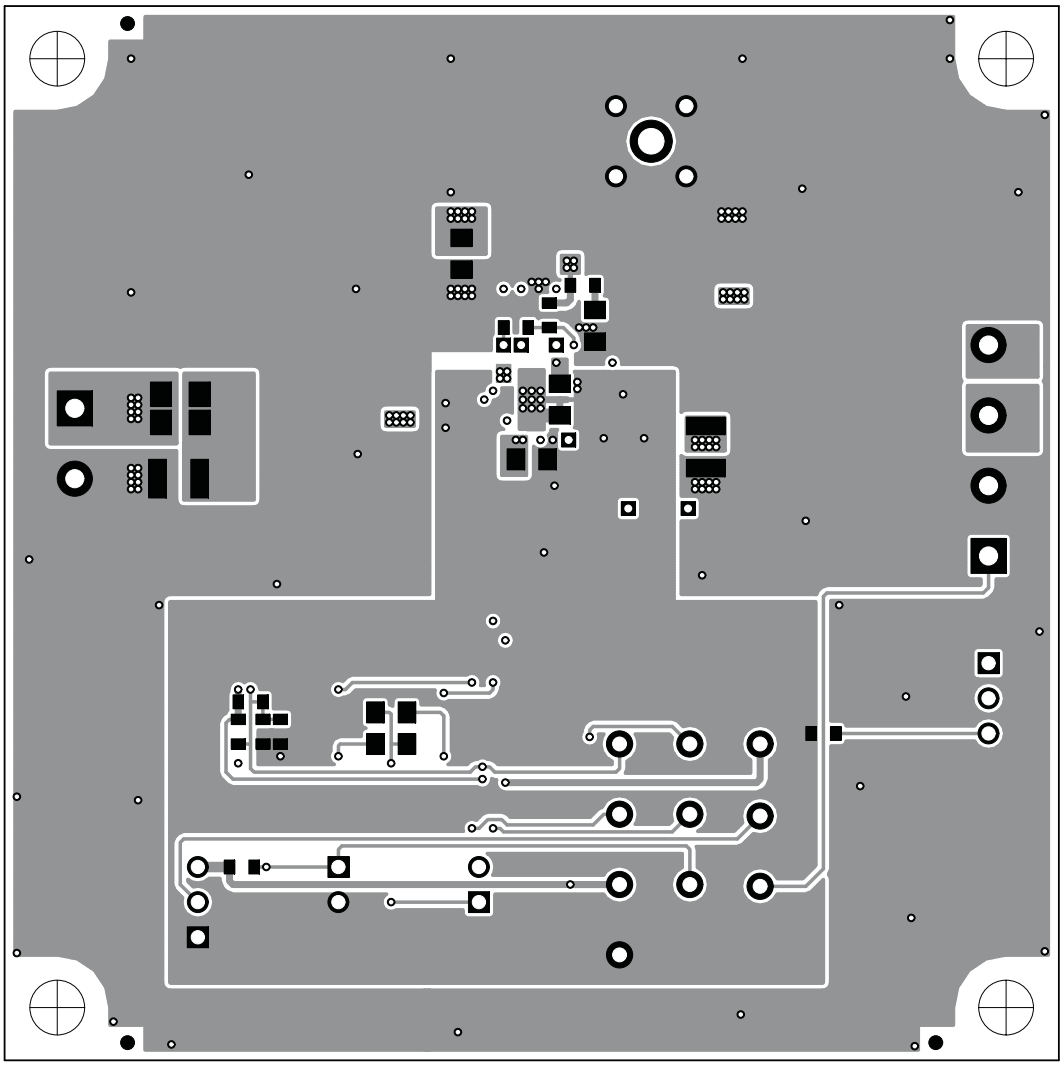

Figure 5. Bottom Layer

Copyright © 2010, Texas Instruments Incorporated

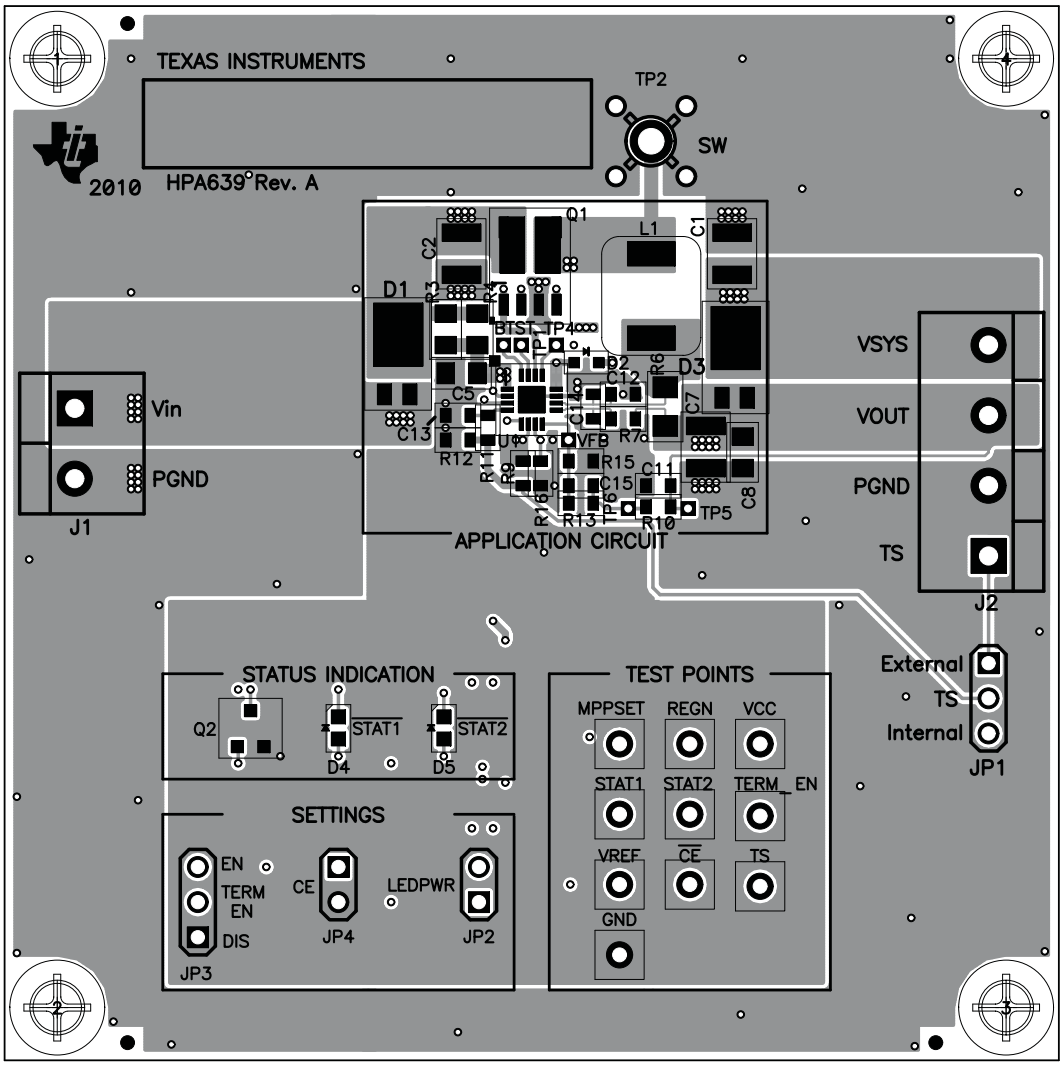

Figure 6. Top Assembly

Copyright © 2010, Texas Instruments Incorporated

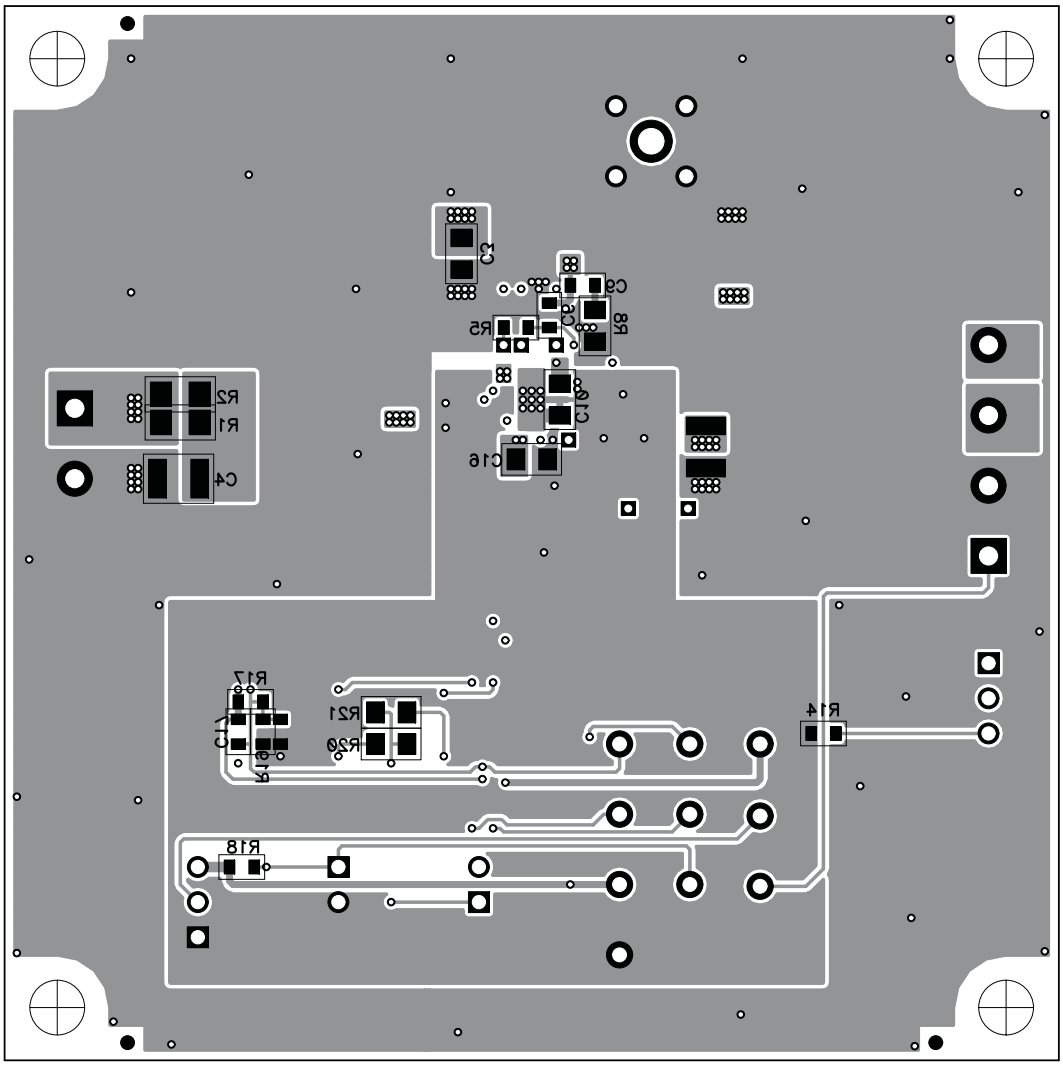

Figure 7. Bottom Assembly

Copyright © 2010, Texas Instruments Incorporated

Schematic

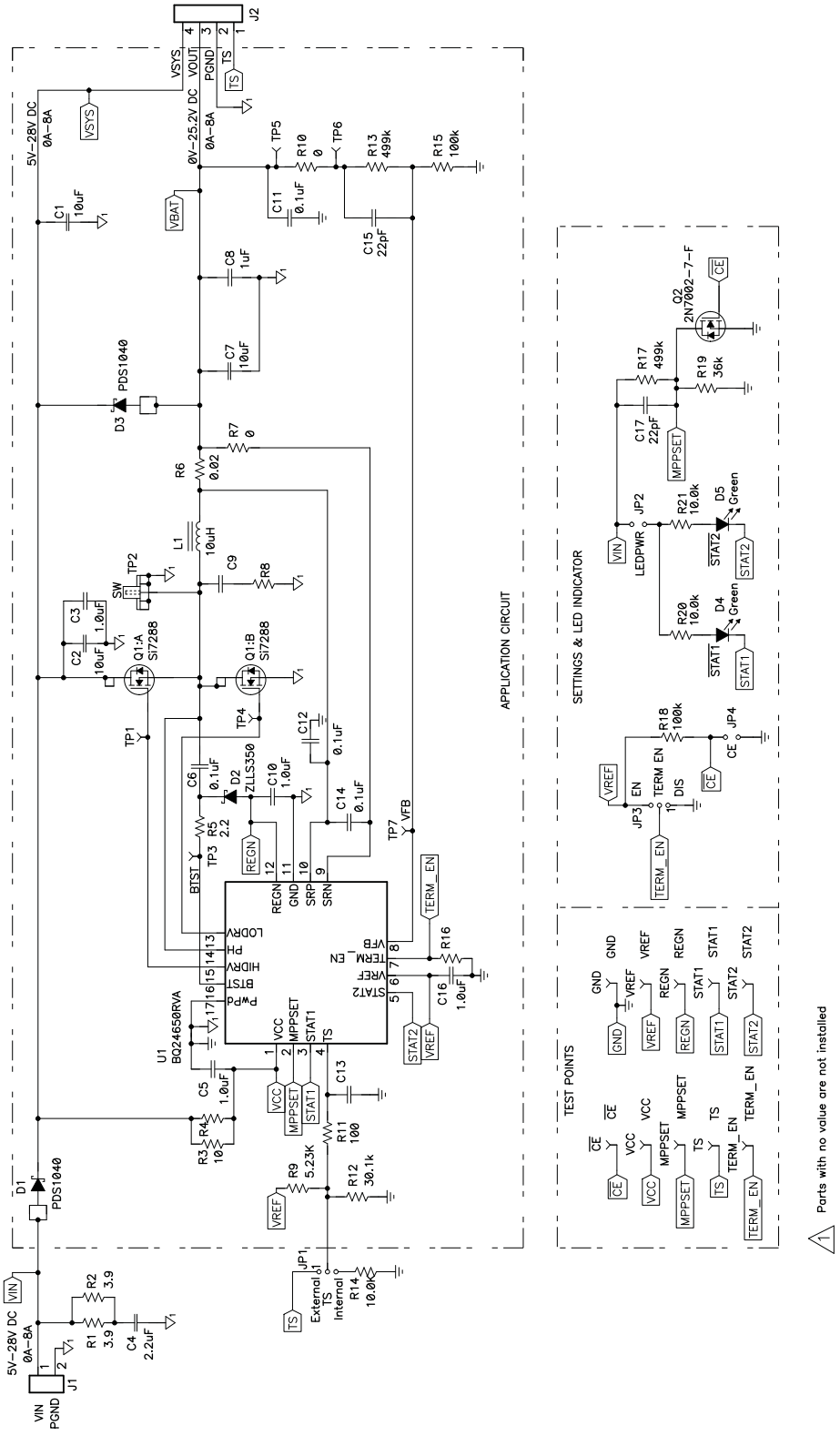

Figure 8. bq24650EVM Schematic

Copyright © 2010, Texas Instruments Incorporated

ADDITIONAL TERMS AND CONDITIONS, WARNINGS, RESTRICTIONS, AND DISCLAIMERS FOR EVALUATION MODULES

Texas Instruments Incorporated (TI) markets, sells, and loans all evaluation boards, kits, and/or modules (EVMs) pursuant to, and user expressly acknowledges, represents, and agrees, and takes sole responsibility and risk with respect to, the following:

1. User agrees and acknowledges that EVMs are intended to be handled and used for feasibility evaluation only in laboratory and/or development environments. Notwithstanding the foregoing, in certain instances, TI makes certain EVMs available to users that do not handle and use EVMs solely for feasibility evaluation only in laboratory and/or development environments, but may use EVMs in a hobbyist environment. All EVMs made available to hobbyist users are FCC certified, as applicable. Hobbyist users acknowledge, agree, and shall comply with all applicable terms, conditions, warnings, and restrictions in this document and are subject to the disclaimer and indemnity provisions included in this document.
2. Unless otherwise indicated, EVMs are not finished products and not intended for consumer use. EVMs are intended solely for use by technically qualified electronics experts who are familiar with the dangers and application risks associated with handling electrical mechanical components, systems, and subsystems.
3. User agrees that EVMs shall not be used as, or incorporated into, all or any part of a finished product.
4. User agrees and acknowledges that certain EVMs may not be designed or manufactured by TI.
5. User must read the user's guide and all other documentation accompanying EVMs, including without limitation any warning or restriction notices, prior to handling and/or using EVMs. Such notices contain important safety information related to, for example, temperatures and voltages. For additional information on TI's environmental and/or safety programs, please visit www.ti.com/esh or contact TI.
6. User assumes all responsibility, obligation, and any corresponding liability for proper and safe handling and use of EVMs.
7. Should any EVM not meet the specifications indicated in the user's guide or other documentation accompanying such EVM, the EVM may be returned to TI within 30 days from the date of delivery for a full refund. THE FOREGOING LIMITED WARRANTY IS THE EXCLUSIVE WARRANTY MADE BY TI TO USER AND IS IN LIEU OF ALL OTHER WARRANTIES, EXPRESSED, IMPLIED, OR STATUTORY, INCLUDING ANY WARRANTY OF MERCHANTABILITY OR FITNESS FOR ANY PARTICULAR PURPOSE. TI SHALL NOT BE LIABLE TO USER FOR ANY INDIRECT, SPECIAL, INCIDENTAL, OR CONSEQUENTIAL DAMAGES RELATED TO THE HANDLING OR USE OF ANY EVM.
8. No license is granted under any patent right or other intellectual property right of TI covering or relating to any machine, process, or combination in which EVMs might be or are used. TI currently deals with a variety of customers, and therefore TI's arrangement with the user is not exclusive. TI assumes no liability for applications assistance, customer product design, software performance, or infringement of patents or services with respect to the handling or use of EVMs.
9. User assumes sole responsibility to determine whether EVMs may be subject to any applicable federal, state, or local laws and regulatory requirements (including but not limited to U.S. Food and Drug Administration regulations, if applicable) related to its handling and use of EVMs and, if applicable, compliance in all respects with such laws and regulations.
10. User has sole responsibility to ensure the safety of any activities to be conducted by it and its employees, affiliates, contractors or designees, with respect to handling and using EVMs. Further, user is responsible to ensure that any interfaces (electronic and/or mechanical) between EVMs and any human body are designed with suitable isolation and means to safely limit accessible leakage currents to minimize the risk of electrical shock hazard.
11. User shall employ reasonable safeguards to ensure that user's use of EVMs will not result in any property damage, injury or death, even if EVMs should fail to perform as described or expected.
12. User shall be solely responsible for proper disposal and recycling of EVMs consistent with all applicable federal, state, and local requirements.

Certain Instructions. User shall operate EVMs within TI's recommended specifications and environmental considerations per the user's guide, accompanying documentation, and any other applicable requirements. Exceeding the specified ratings (including but not limited to input and output voltage, current, power, and environmental ranges) for EVMs may cause property damage, personal injury or death. If there are questions concerning these ratings, user should contact a TI field representative prior to connecting interface electronics including input power and intended loads. Any loads applied outside of the specified output range may result in unintended and/or inaccurate operation and/or possible permanent damage to the EVM and/or interface electronics. Please consult the applicable EVM user's guide prior to connecting any load to the EVM output. If there is uncertainty as to the load specification, please contact a TI field representative. During normal operation, some circuit components may have case temperatures greater than 60°C as long as the input and output are maintained at a normal ambient operating temperature. These components include but are not limited to linear regulators, switching transistors, pass transistors, and current sense resistors which can be identified using EVMs' schematics located in the applicable EVM user's guide. When placing measurement probes near EVMs during normal operation, please be aware that EVMs may become very warm. As with all electronic evaluation tools, only qualified personnel knowledgeable in electronic measurement and diagnostics normally found in development environments should use EVMs.

Agreement to Defend, Indemnify and Hold Harmless. User agrees to defend, indemnify, and hold TI, its directors, officers, employees, agents, representatives, affiliates, licensors and their representatives harmless from and against any and all claims, damages, losses, expenses, costs and liabilities (collectively, "Claims") arising out of, or in connection with, any handling and/or use of EVMs. User's indemnity shall apply whether Claims arise under law of tort or contract or any other legal theory, and even if EVMs fail to perform as described or expected.

Safety-Critical or Life-Critical Applications. If user intends to use EVMs in evaluations of safety critical applications (such as life support), and a failure of a TI product considered for purchase by user for use in user's product would reasonably be expected to cause severe personal injury or death such as devices which are classified as FDA Class III or similar classification, then user must specifically notify TI of such intent and enter into a separate Assurance and Indemnity Agreement.

RADIO FREQUENCY REGULATORY COMPLIANCE INFORMATION FOR EVALUATION MODULES

Texas Instruments Incorporated (TI) evaluation boards, kits, and/or modules (EVMs) and/or accompanying hardware that is marketed, sold, or loaned to users may or may not be subject to radio frequency regulations in specific countries.

General Statement for EVMs Not Including a Radio

For EVMs not including a radio and not subject to the U.S. Federal Communications Commission (FCC) or Industry Canada (IC) regulations, TI intends EVMs to be used only for engineering development, demonstration, or evaluation purposes. EVMs are not finished products typically fit for general consumer use. EVMs may nonetheless generate, use, or radiate radio frequency energy, but have not been tested for compliance with the limits of computing devices pursuant to part 15 of FCC or the ICES-003 rules. Operation of such EVMs may cause interference with radio communications, in which case the user at his own expense will be required to take whatever measures may be required to correct this interference.

General Statement for EVMs including a radio

User Power/Frequency Use Obligations: For EVMs including a radio, the radio included in such EVMs is intended for development and/or professional use only in legally allocated frequency and power limits. Any use of radio frequencies and/or power availability in such EVMs and their development application(s) must comply with local laws governing radio spectrum allocation and power limits for such EVMs. It is the user's sole responsibility to only operate this radio in legally acceptable frequency space and within legally mandated power limitations. Any exceptions to this are strictly prohibited and unauthorized by TI unless user has obtained appropriate experimental and/or development licenses from local regulatory authorities, which is the sole responsibility of the user, including its acceptable authorization.

U.S. Federal Communications Commission Compliance

For EVMs Annotated as FCC – FEDERAL COMMUNICATIONS COMMISSION Part 15 Compliant

Caution

This device complies with part 15 of the FCC Rules. Operation is subject to the following two conditions: (1) This device may not cause harmful interference, and (2) this device must accept any interference received, including interference that may cause undesired operation. Changes or modifications could void the user's authority to operate the equipment.

FCC Interference Statement for Class A EVM devices

This equipment has been tested and found to comply with the limits for a Class A digital device, pursuant to part 15 of the FCC Rules. These limits are designed to provide reasonable protection against harmful interference when the equipment is operated in a commercial environment. This equipment generates, uses, and can radiate radio frequency energy and, if not installed and used in accordance with the instruction manual, may cause harmful interference to radio communications. Operation of this equipment in a residential area is likely to cause harmful interference in which case the user will be required to correct the interference at its own expense.

FCC Interference Statement for Class B EVM devices

This equipment has been tested and found to comply with the limits for a Class B digital device, pursuant to part 15 of the FCC Rules. These limits are designed to provide reasonable protection against harmful interference in a residential installation. This equipment generates, uses and can radiate radio frequency energy and, if not installed and used in accordance with the instructions, may cause harmful interference to radio communications. However, there is no guarantee that interference will not occur in a particular installation. If this equipment does cause harmful interference to radio or television reception, which can be determined by turning the equipment off and on, the user is encouraged to try to correct the interference by one or more of the following measures:

- Reorient or relocate the receiving antenna.
- Increase the separation between the equipment and receiver.
- Connect the equipment into an outlet on a circuit different from that to which the receiver is connected.
- Consult the dealer or an experienced radio/TV technician for help.

Industry Canada Compliance (English)

For EVMs Annotated as IC – INDUSTRY CANADA Compliant:

This Class A or B digital apparatus complies with Canadian ICES-003.

Changes or modifications not expressly approved by the party responsible for compliance could void the user's authority to operate the equipment.

Concerning EVMs Including Radio Transmitters

This device complies with Industry Canada licence-exempt RSS standard(s). Operation is subject to the following two conditions: (1) this device may not cause interference, and (2) this device must accept any interference, including interference that may cause undesired operation of the device.

Concerning EVMs Including Detachable Antennas

Under Industry Canada regulations, this radio transmitter may only operate using an antenna of a type and maximum (or lesser) gain approved for the transmitter by Industry Canada. To reduce potential radio interference to other users, the antenna type and its gain should be so chosen that the equivalent isotropically radiated power (e.i.r.p.) is not more than that necessary for successful communication.

This radio transmitter has been approved by Industry Canada to operate with the antenna types listed in the user guide with the maximum permissible gain and required antenna impedance for each antenna type indicated. Antenna types not included in this list, having a gain greater than the maximum gain indicated for that type, are strictly prohibited for use with this device.

Canada Industry Canada Compliance (French)

Cet appareil numérique de la classe A ou B est conforme à la norme NMB-003 du Canada

Les changements ou les modifications pas expressément approuvés par la partie responsable de la conformité ont pu vider l'autorité de l'utilisateur pour actionner l'équipement.

Concernant les EVMs avec appareils radio

Le présent appareil est conforme aux CNR d'Industrie Canada applicables aux appareils radio exempts de licence. L'exploitation est autorisée aux deux conditions suivantes : (1) l'appareil ne doit pas produire de brouillage, et (2) l'utilisateur de l'appareil doit accepter tout brouillage radioélectrique subi, même si le brouillage est susceptible d'en compromettre le fonctionnement.

Concernant les EVMs avec antennes détachables

Conformément à la réglementation d'Industrie Canada, le présent émetteur radio peut fonctionner avec une antenne d'un type et d'un gain maximal (ou inférieur) approuvé pour l'émetteur par Industrie Canada. Dans le but de réduire les risques de brouillage radioélectrique à l'intention des autres utilisateurs, il faut choisir le type d'antenne et son gain de sorte que la puissance isotrope rayonnée équivalente (p.i.r.e.) ne dépasse pas l'intensité nécessaire à l'établissement d'une communication satisfaisante.

Le présent émetteur radio a été approuvé par Industrie Canada pour fonctionner avec les types d'antenne énumérés dans le manuel d'usage et ayant un gain admissible maximal et l'impédance requise pour chaque type d'antenne. Les types d'antenne non inclus dans cette liste, ou dont le gain est supérieur au gain maximal indiqué, sont strictement interdits pour l'exploitation de l'émetteur.

Mailing Address: Texas Instruments, Post Office Box 655303, Dallas, Texas 75265
Copyright © 2014, Texas Instruments Incorporated

Important Notice for Users of EVMs Considered "Radio Frequency Products" in Japan

EVMs entering Japan are NOT certified by TI as conforming to Technical Regulations of Radio Law of Japan.

If user uses EVMs in Japan, user is required by Radio Law of Japan to follow the instructions below with respect to EVMs:

1. Use EVMs in a shielded room or any other test facility as defined in the notification #173 issued by Ministry of Internal Affairs and Communications on March 28, 2006, based on Sub-section 1.1 of Article 6 of the Ministry's Rule for Enforcement of Radio Law of Japan,
2. Use EVMs only after user obtains the license of Test Radio Station as provided in Radio Law of Japan with respect to EVMs, or
3. Use of EVMs only after user obtains the Technical Regulations Conformity Certification as provided in Radio Law of Japan with respect to EVMs. Also, do not transfer EVMs, unless user gives the same notice above to the transferee. Please note that if user does not follow the instructions above, user will be subject to penalties of Radio Law of Japan.

http://www.tij.co.jp

【無線電波を送信する製品の開発キットをお使いになる際の注意事項】 本開発キットは技術基準適合証明を受けておりません。 本製品のご使用に際しては、電波法遵守のため、以下のいずれかの措置を取っていただく必要がありますのでご注意ください。

1. 電波法施行規則第6条第1項第1号に基づく平成18年3月28日総務省告示第173号で定められた電波暗室等の試験設備でご使用いただく。
2. 実験局の免許を取得後ご使用いただく。
3. 技術基準適合証明を取得後ご使用いただく。。

なお、本製品は、上記の「ご使用にあたっての注意」を譲渡先、移転先に通知しない限り、譲渡、移転できないものとします

上記を遵守頂けない場合は、電波法の罰則が適用される可能性があることをご留意ください。

日本テキサス・インスツルメンツ株式会社
東京都新宿区西新宿６丁目２４番１号
西新宿三井ビル
http://www.tij.co.jp

Texas Instruments Japan Limited
(address) 24-1, Nishi-Shinjuku 6 chome, Shinjuku-ku, Tokyo, Japan

IMPORTANT NOTICE

Texas Instruments Incorporated and its subsidiaries (TI) reserve the right to make corrections, enhancements, improvements and other changes to its semiconductor products and services per JESD46, latest issue, and to discontinue any product or service per JESD48, latest issue. Buyers should obtain the latest relevant information before placing orders and should verify that such information is current and complete. All semiconductor products (also referred to herein as “components”) are sold subject to TI’s terms and conditions of sale supplied at the time of order acknowledgment.

TI warrants performance of its components to the specifications applicable at the time of sale, in accordance with the warranty in TI’s terms and conditions of sale of semiconductor products. Testing and other quality control techniques are used to the extent TI deems necessary to support this warranty. Except where mandated by applicable law, testing of all parameters of each component is not necessarily performed.

TI assumes no liability for applications assistance or the design of Buyers’ products. Buyers are responsible for their products and applications using TI components. To minimize the risks associated with Buyers’ products and applications, Buyers should provide adequate design and operating safeguards.

TI does not warrant or represent that any license, either express or implied, is granted under any patent right, copyright, mask work right, or other intellectual property right relating to any combination, machine, or process in which TI components or services are used. Information published by TI regarding third-party products or services does not constitute a license to use such products or services or a warranty or endorsement thereof. Use of such information may require a license from a third party under the patents or other intellectual property of the third party, or a license from TI under the patents or other intellectual property of TI.

Reproduction of significant portions of TI information in TI data books or data sheets is permissible only if reproduction is without alteration and is accompanied by all associated warranties, conditions, limitations, and notices. TI is not responsible or liable for such altered documentation. Information of third parties may be subject to additional restrictions.

Resale of TI components or services with statements different from or beyond the parameters stated by TI for that component or service voids all express and any implied warranties for the associated TI component or service and is an unfair and deceptive business practice. TI is not responsible or liable for any such statements.

Buyer acknowledges and agrees that it is solely responsible for compliance with all legal, regulatory and safety-related requirements concerning its products, and any use of TI components in its applications, notwithstanding any applications-related information or support that may be provided by TI. Buyer represents and agrees that it has all the necessary expertise to create and implement safeguards which anticipate dangerous consequences of failures, monitor failures and their consequences, lessen the likelihood of failures that might cause harm and take appropriate remedial actions. Buyer will fully indemnify TI and its representatives against any damages arising out of the use of any TI components in safety-critical applications.

In some cases, TI components may be promoted specifically to facilitate safety-related applications. With such components, TI’s goal is to help enable customers to design and create their own end-product solutions that meet applicable functional safety standards and requirements. Nonetheless, such components are subject to these terms.

No TI components are authorized for use in FDA Class III (or similar life-critical medical equipment) unless authorized officers of the parties have executed a special agreement specifically governing such use.

Only those TI components which TI has specifically designated as military grade or “enhanced plastic” are designed and intended for use in military/aerospace applications or environments. Buyer acknowledges and agrees that any military or aerospace use of TI components which have ***not*** been so designated is solely at the Buyer's risk, and that Buyer is solely responsible for compliance with all legal and regulatory requirements in connection with such use.

TI has specifically designated certain components as meeting ISO/TS16949 requirements, mainly for automotive use. In any case of use of non-designated products, TI will not be responsible for any failure to meet ISO/TS16949.

Products		**Applications**	
Audio	www.ti.com/audio	Automotive and Transportation	www.ti.com/automotive
Amplifiers	amplifier.ti.com	Communications and Telecom	www.ti.com/communications
Data Converters	dataconverter.ti.com	Computers and Peripherals	www.ti.com/computers
DLP® Products	www.dlp.com	Consumer Electronics	www.ti.com/consumer-apps
DSP	dsp.ti.com	Energy and Lighting	www.ti.com/energy
Clocks and Timers	www.ti.com/clocks	Industrial	www.ti.com/industrial
Interface	interface.ti.com	Medical	www.ti.com/medical
Logic	logic.ti.com	Security	www.ti.com/security
Power Mgmt	power.ti.com	Space, Avionics and Defense	www.ti.com/space-avionics-defense
Microcontrollers	microcontroller.ti.com	Video and Imaging	www.ti.com/video
RFID	www.ti-rfid.com		
OMAP Applications Processors	www.ti.com/omap	**TI E2E Community**	e2e.ti.com
Wireless Connectivity	www.ti.com/wirelessconnectivity		

Mailing Address: Texas Instruments, Post Office Box 655303, Dallas, Texas 75265
Copyright © 2014, Texas Instruments Incorporated