BOOSTXL-TLV8544PIR User's Guide

This guide covers the operational details of the BOOSTXL-TLV8544PIR Launchpad BoosterPack module and the supporting GUI software. The BOOSTXL-TLV8544PIR demonstrates the quad, nanopower op amp (TLV8544) operating as an analog front end (AFE) in a passive infrared motion sensor system.

Contents

1 General Description 1
2 BOOSTXL-TLV8544PIR Hardware Setup 5
3 CC2650 LaunchPad Application Firmware Installation 5
4 Software Installation 9
5 Running the Application 16
6 BOOSTXL-TLV8544PIR BoosterPack Schematics 22

Trademarks

All trademarks are the property of their respective owners.

1 General Description

The BOOSTXL-TLV8544, and its supporting GUI software are designed to work with TI's SimpleLink CC2650 multi-frequency 2.6-GHz wireless LaunchPad: LAUNCHXL-CC2650. This combination of LaunchPad and BoosterPack allows users to evaluate the operation and performance of the TLV8544.

- The TLV8544 quad nanopower op amp consumes nanoamperes per channel, maximizing the life of the battery and motion sensor system. Reducing frequency of battery or unit replacement also reduces total cost of ownership.
- Amplification, filtering and threshold detection is all performed by a single device, simplifying the design and reducing solution size
- This board design could easily be used as the basis for an ultra-low power, battery-operated, wireless PIR or microwave motion sensing system, further simplifying design and speeding time to market.

An embedded I2C current sensor (INA226) provides real-time measurement of supply current to TLV8544. The current measurement value is streamed in real-time to the host software, and presented as both an analog gauge and a digital readout.

The BOOSTXL-TLV8544PIR BoosterPack is shown mounted on the CC2650 LaunchPad in Figure 1. Figure 2 shows the GUI software screenshot.

Copyright © 2017, Texas Instruments Incorporated

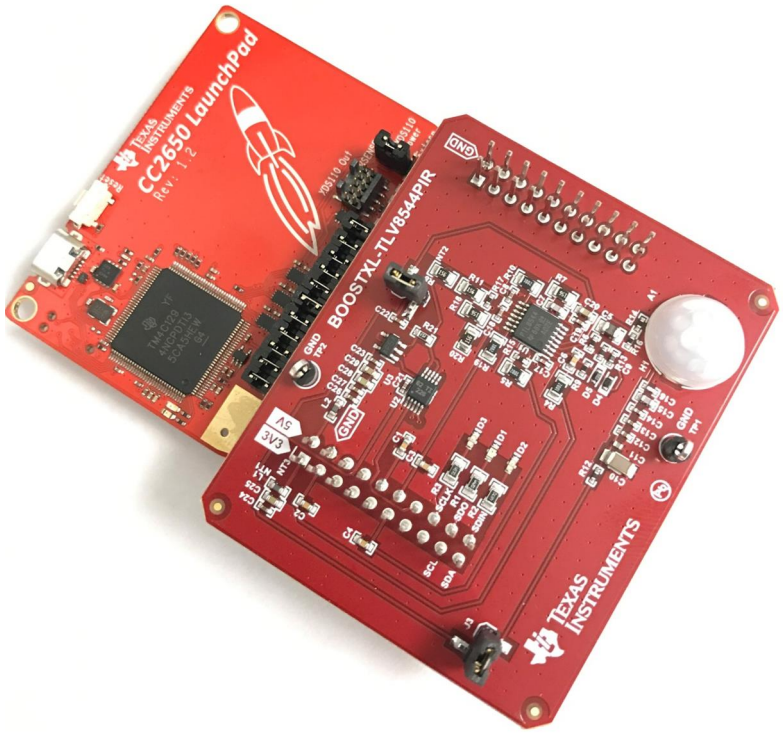

Figure 1. BOOSTXL-TLV8544PIR Booster PackBoosterPack Mounted on CC2650 LaunchPad

The BOOSTXL-TLV8544PIR GUI software application provides a real-time view of system performance including motion data and supply current.

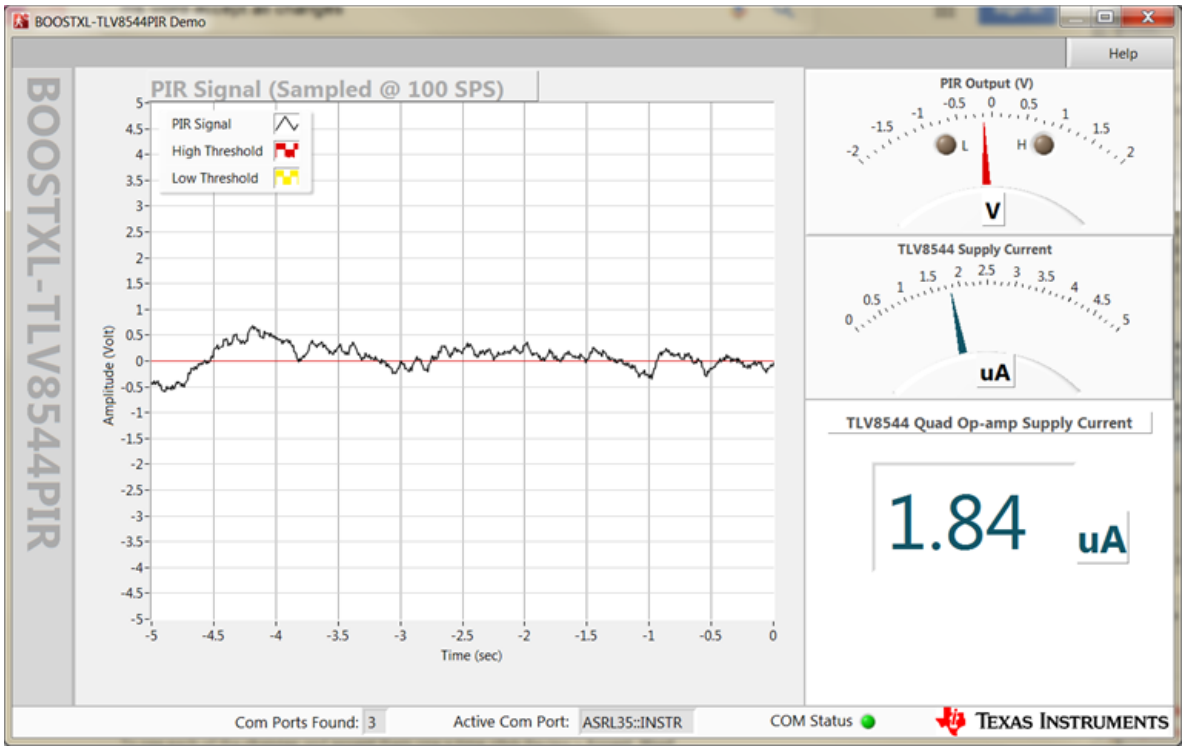

Figure 2. GUI Software Display of Motion and Supply Current Streamed From Hardware in Real Time

Copyright © 2017, Texas Instruments Incorporated

1.1 BOOSTXL-TLV8544PIR Conceptual Diagram

Figure 3 is a conceptual view of the key features of the BoosterPack. There are 3 primary functional blocks supported:

1. An amplifier and filter stage which increases the magnitude of the signal, filters out unwanted information, and level-shifts the signal to enable the second functional block
2. A Window Comparator stage which detects high and low threshold crossing events. The thresholds are fixed to ¾ V_{CC} and ¼ V_{CC}, respectively
3. An embedded current sensor (INA226) for measuring TLV8544 supply current in real-time

Figure 3 provides additional details of the primary functions.

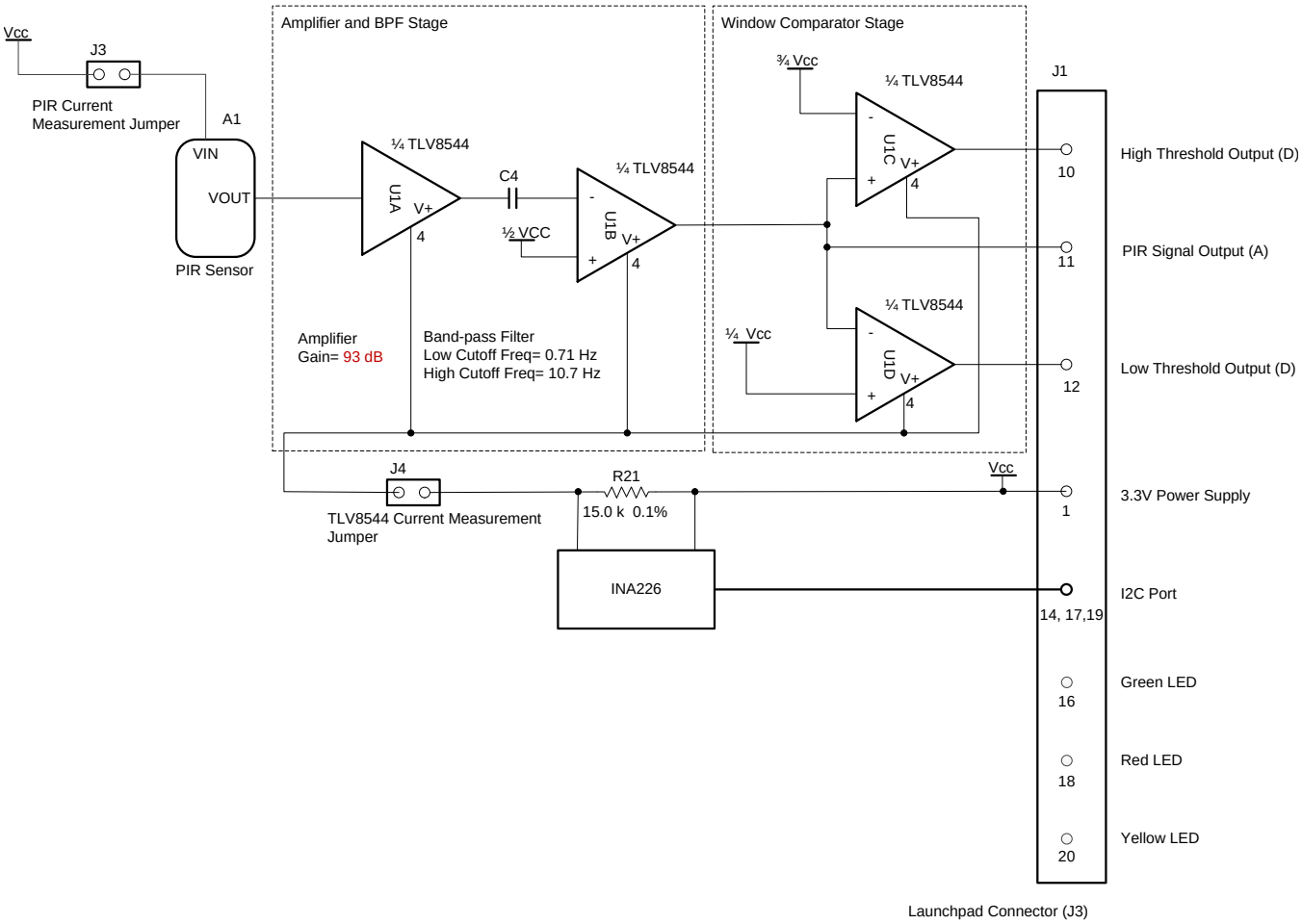

Figure 3. BOOSTXL TLV8544PIR BoosterPack Conceptual Diagram

Copyright © 2017, Texas Instruments Incorporated

1.2 BOOSTXL-TLV8544PIR Board Layout

Figure 4 is a 3D rendering of the BOOSTXL-TLV8544PIR BoosterPack. Key devices, signals and connections are indicated in the illustration.

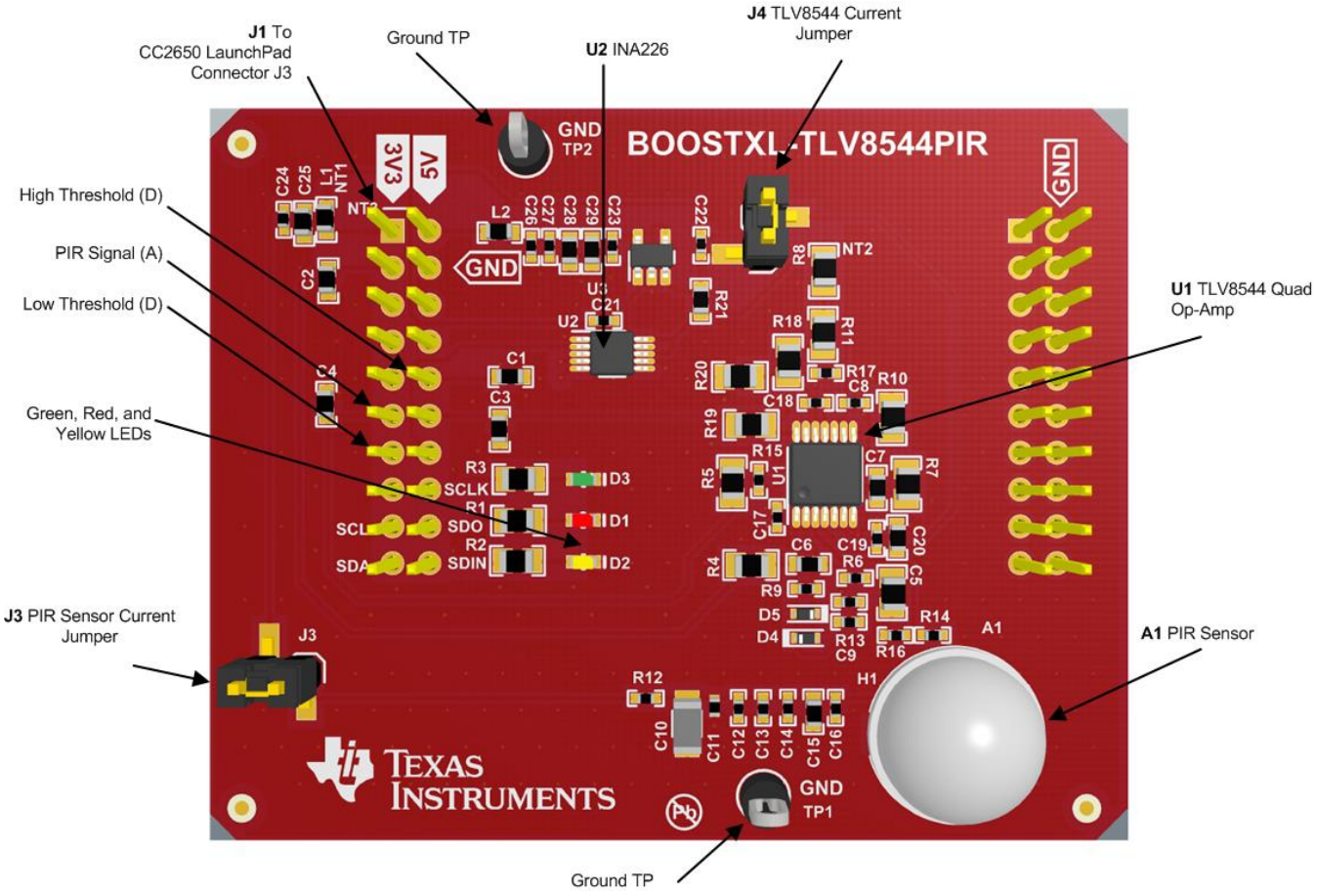

Note: A – Analog signal, D – Digital signal, Bold Text – BOOSTXL-TLV8544PIR component reference designator

Figure 4. BOOSTXL-TLV8544PIR BoosterPackBoard (Top View)

1.2.1 LEDs

The BOOSTXL-TLV8544PIR BoosterPack has 3 colored indicator LEDs. The 3 embedded LED indicators provide visual feedback of the host MCU (CC2650) status and threshold crossing events. The color / function assignment is as follows:

Table 1. Indicator LEDs Operation Modes

	COLOR	FUNCTION	NOTE
D3	Green	Host MCU (CC2650 LaunchPad) is ready	MCU has completed initialization process. PIR signal acquisition and data streaming is active
D1	Red	PIR signal amplitude is above high threshold (3/4 Vcc)	Eligible motion event detected: Entering detection area
D2	Yellow	PIR signal amplitude is below low threshold (1/4 Vcc)	Eligible motion event detected: Exiting detection area

Copyright © 2017, Texas Instruments Incorporated

1.2.2 Jumper Blocks and Test Points

The 2 jumper connectors, J3 and J4, can be used to measure supply current to the PIR sensor (A1) and the TLV8544 (U1), respectively. To perform current measurement, remove the jumper block, then connect the 2 pins to a current meter. The meter must be capable of measuring low current values (<10 µA). Typically, while no motion is detected, the current to the PIR sensor (through J3) measures about 0.5 µA while the TLV8544 (through J4) about 1.7 µA.

To return to normal operation, jumper blocks must be replaced on both J3 and J4.

The 2 ground test points are handy for instrumentation grounding.

2 BOOSTXL-TLV8544PIR Hardware Setup

Before handling hardware, make sure the proper anti-static and safety precaution procures are followed.

2.1 BoosterPack Installation

To install BOOSTXL-TLV8544PIR BoosterPack onto the LaunchPad, check the alignment of the 2 boards using Figure 1 as a reference. Gently place the BoosterPack on the LaunchPad and make sure the pins of the 2 connectors are aligned properly. Gradually apply force on the BoosterPack until it's fully plugged in. Stop and check alignment if excessive resistance is detected.

Visually inspect the BoosterPack placement. If everything looks as expected, connect the LaunchPad to the PC using the provided Micro USB cable. The green LED on the LaunchPad should illuminate upon connection.

2.2 Stand-Alone Motion Detection With Embedded LEDs

Once the firmware has been installed, the BoosterPack/LaunchPad bundle is capable of performing motion detection with embedded LEDs. The red and yellow LEDs represent high and low threshold crossing events respectively. The high and low-thresholds are fixed at ¾ V_{CC} (red) and ¼ V_{CC} (yellow). When PIR signal amplitude is within ¼ V_{CC} and ¾ V_{CC}, both the red and yellow LEDs are turned off, however, the green LED remains illuminated.

3 CC2650 LaunchPad Application Firmware Installation

3.1 CC2650 LaunchPad Firmware Installer Software

1. Go to TI's official download page to download the CC2650 LaunchPad Firmware Installer software (http://www.ti.com/tool/FLASH-PROGRAMMER). Select FLASH-PROGRAMMER-2 and click download.
2. Complete the export compliance questionnaire accurately, then submit. When approval is received, click download. The downloaded file will be a zipped file.
3. Extract the contents of the zip file to a known location and run the setup executable.
4. Follow the on-screen prompts, accept the License Agreement, then continue.
5. Continue through the prompts to install the software.
6. Click Finish when done.

For technical support, please visit the TI LaunchPad Kit page.

3.1.1 LaunchPad Application Firmware Installation

1. Download the firmware binary BOOSTXL-TLV8544PIR_LP.out available at ti.com/BOOSTXL-TLV8544PIR and save it to a known location.
2. Run SmartRF Flash Programmer 2 by clicking on Flash Programmer 2 under Windows Program Menu - Texas Instruments/SmartRF Flash Programmer 2/
3. If your LaunchPad requires system firmware update, the following screen is shown as follows. If the system firmware is up-to-date, skip to next step. In the left panel called *Connected Devices*, click on

Copyright © 2017, Texas Instruments Incorporated

Unknown below XDS110, SDS-L1. See Figure 5

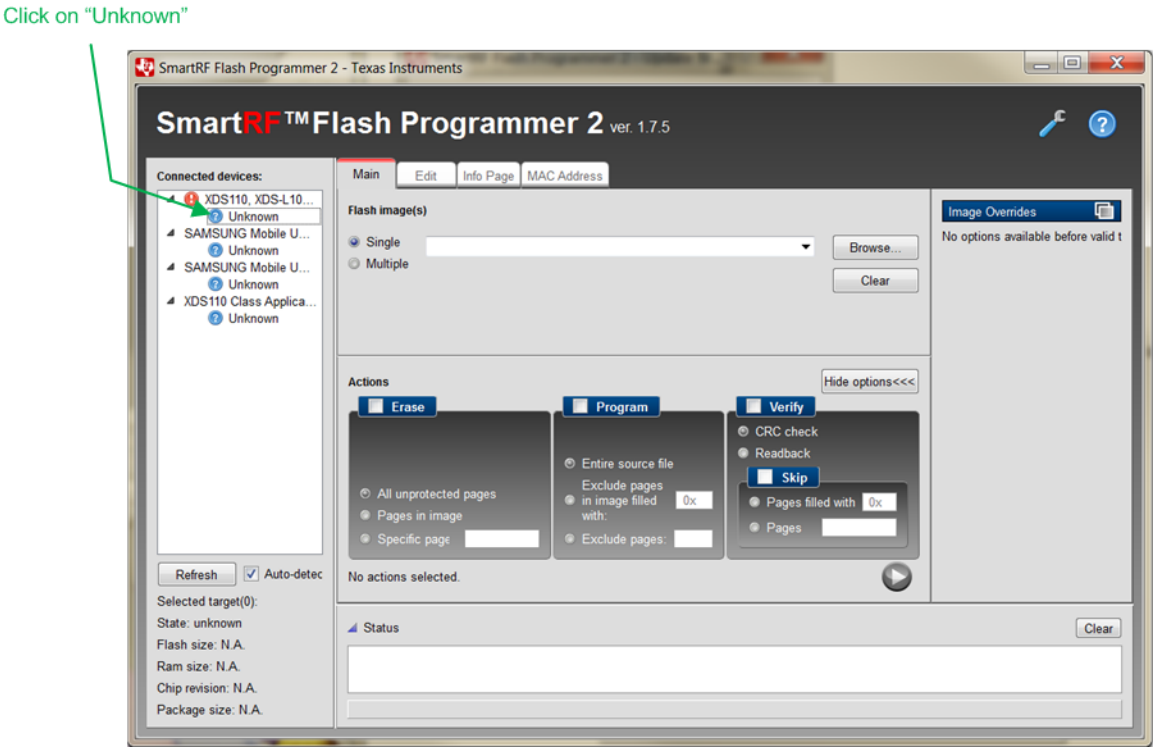

Figure 5. LaunchPad System Firmware Needs Update

A dialog box offering to update firmware will open (see Figure 6). Click *Yes*, then click *Done*.

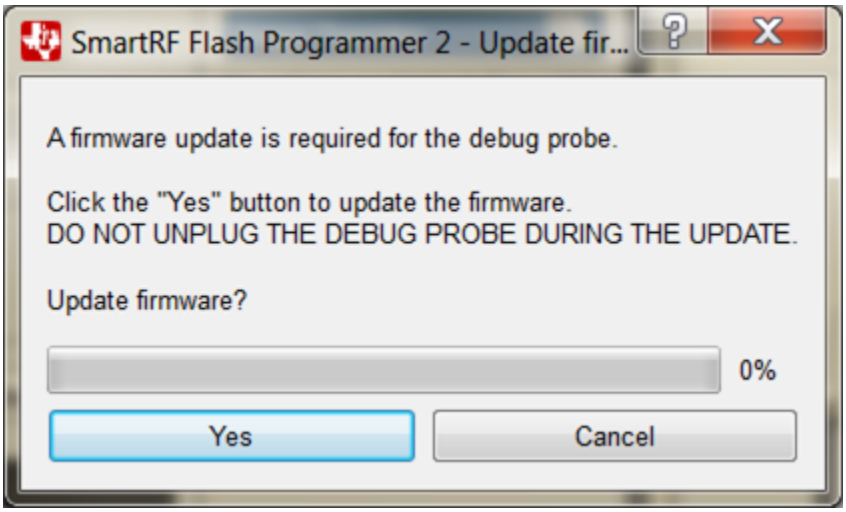

Figure 6. Click *Yes* (to System Firmware Update Request)

After the system firmware update is complete, the *unknown* under XDS110, XDS-L10… drop-down list in the left panel (*Connected Devices*), should be replaced by *CC2650*, as shown in Figure 7.

Copyright © 2017, Texas Instruments Incorporated

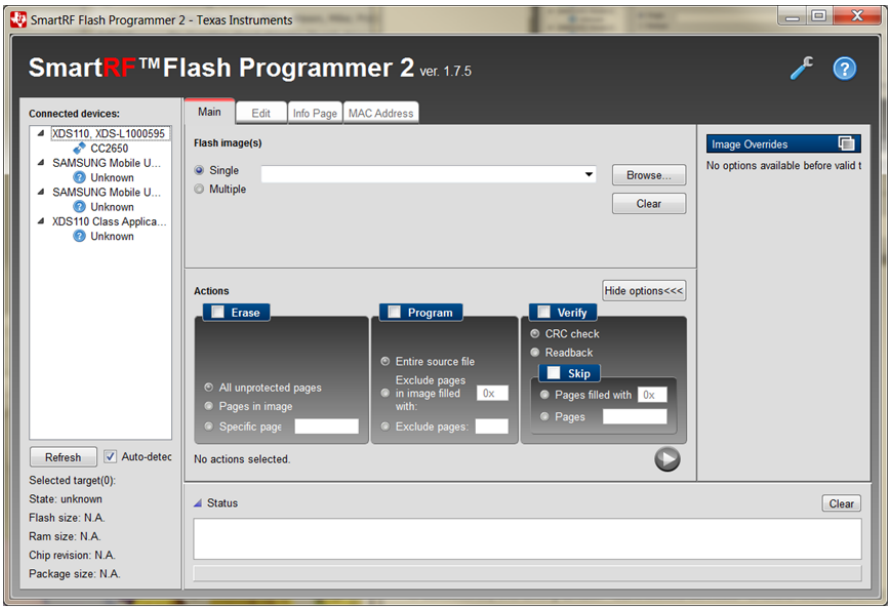

Figure 7. LaunchPad Device Driver Has Been Installed Properly

Click on *CC2650* to select it.

4. Click on Browse button under the *Main* tab in the center panel. Go to the location where firmware binary BOOSTXL-TLV8544PIR_LP.out is saved and select it.
5. Check the following options, then click the Run button. See Figure 8.

In the center *Actions* panel, there are 3 section. Make the following selections

- Erase – All unprotected pages
- Program – Entire source file
- Verify – CRC check

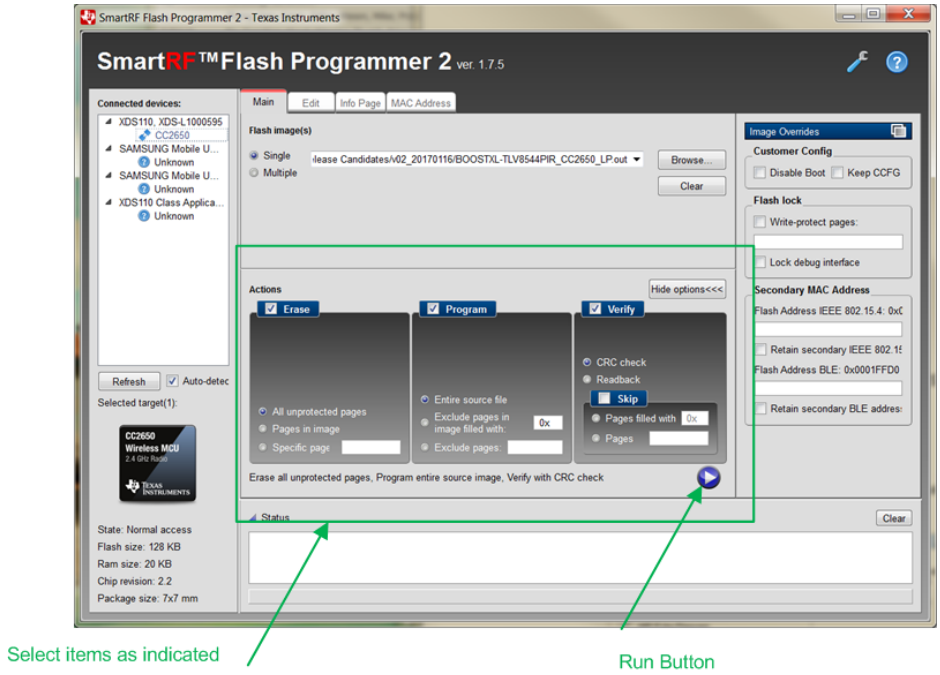

Figure 8. Firmware Installer

Copyright © 2017, Texas Instruments Incorporated

The following screen should be shown if the firmware installation is successful. Note that the Status panel toward the bottom of the screen lists several messages, followed by a green *Success!* message at the bottom of the screen. See Figure 9.

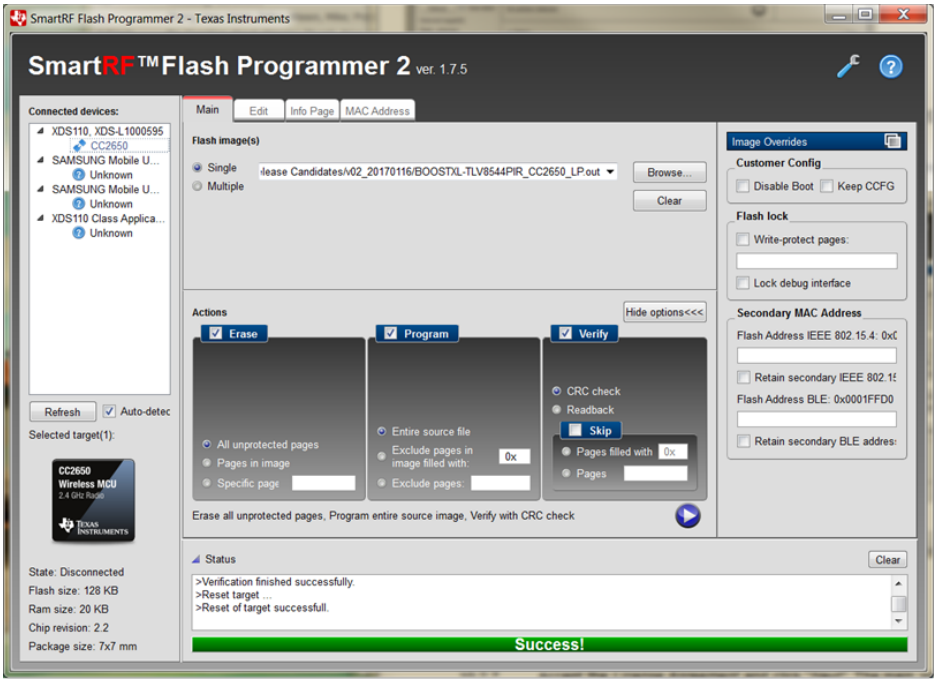

Figure 9. Application Firmware Installation is Complete

The application firmware is now ready to run.

Copyright © 2017, Texas Instruments Incorporated

4 Software Installation

The software installation process includes Windows driver installation and the application installation. Unless otherwise noted, user is expected to choose default options.

4.1 CC2650 LaunchPad Windows Driver Installation

The Windows device drivers should have been installed during LaunchPad Firmware Installer software installation. To check, opening Windows Device Manager and look for entry *XDS110 Application/User UART (COMnn)* under *Ports (COM & LPT).* Figure 10 shows the drivers have not been installed.

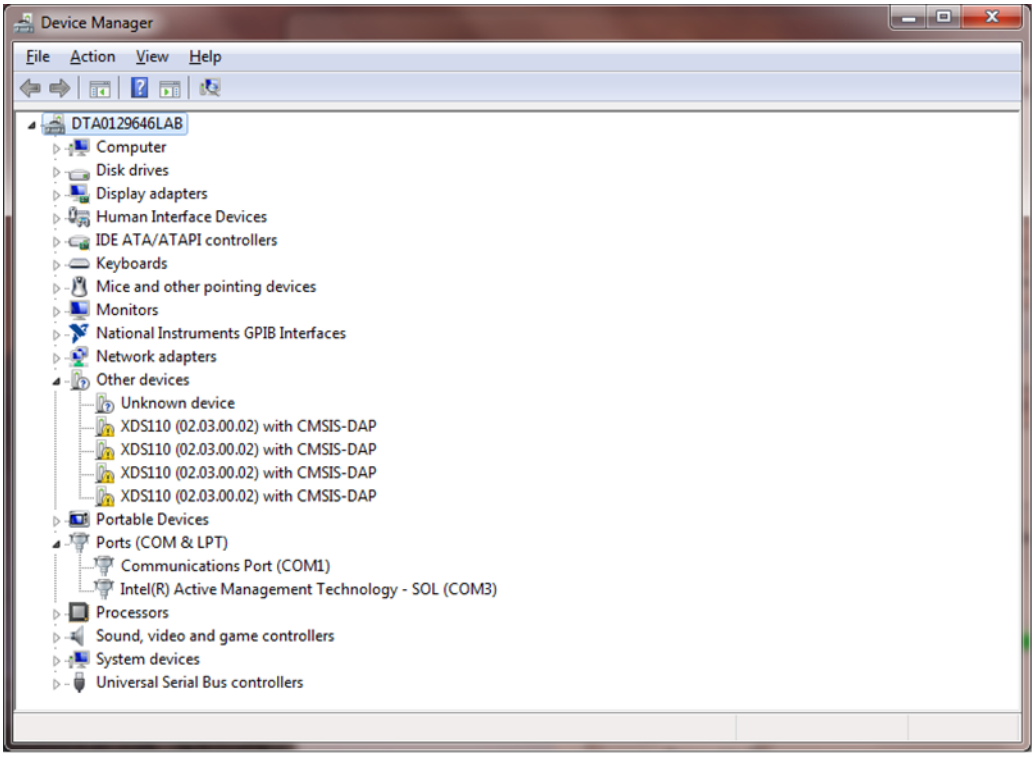

Figure 10. Windows Driver Has Not Been Installed

Copyright © 2017, Texas Instruments Incorporated

Figure 11 shows the drivers have been successfully installed.

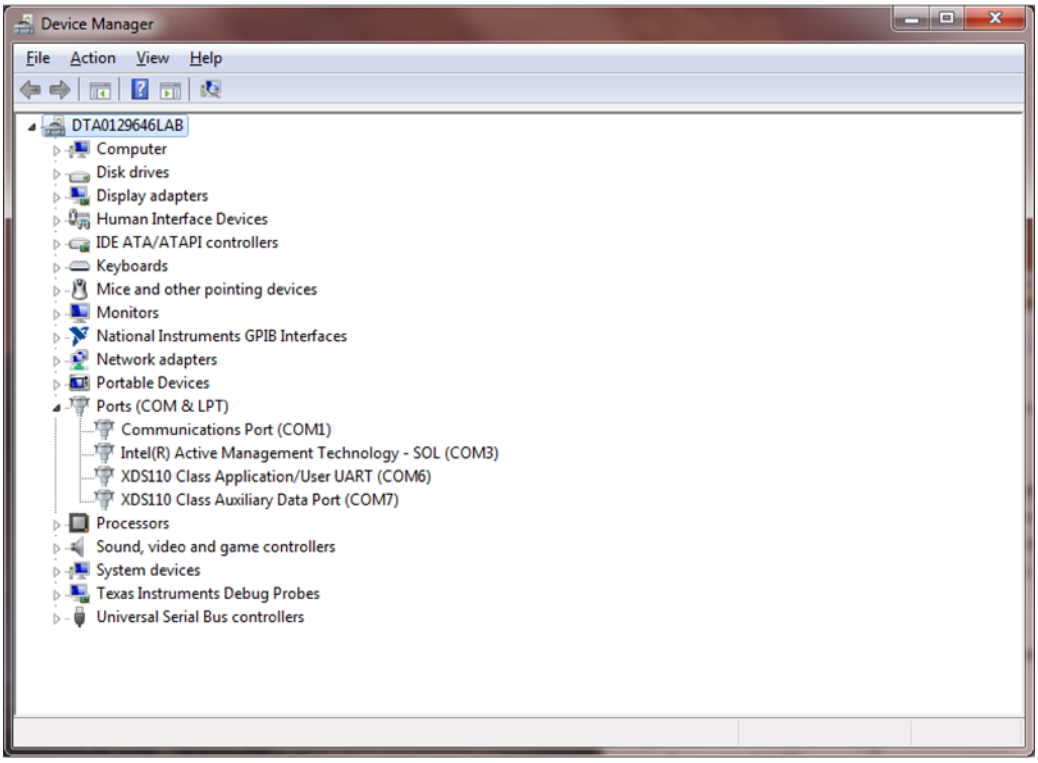

Figure 11. Windows Driver Has Been Installed Already

If the drivers are installed, simply go to next step. Otherwise, download the driver from TI's official page (http://processors.wiki.ti.com/index.php/XDS_Emulation_Software_Package). Right-click on the EXE file and select *Run as administrator*. The following dialog box will open (see Figure 12):

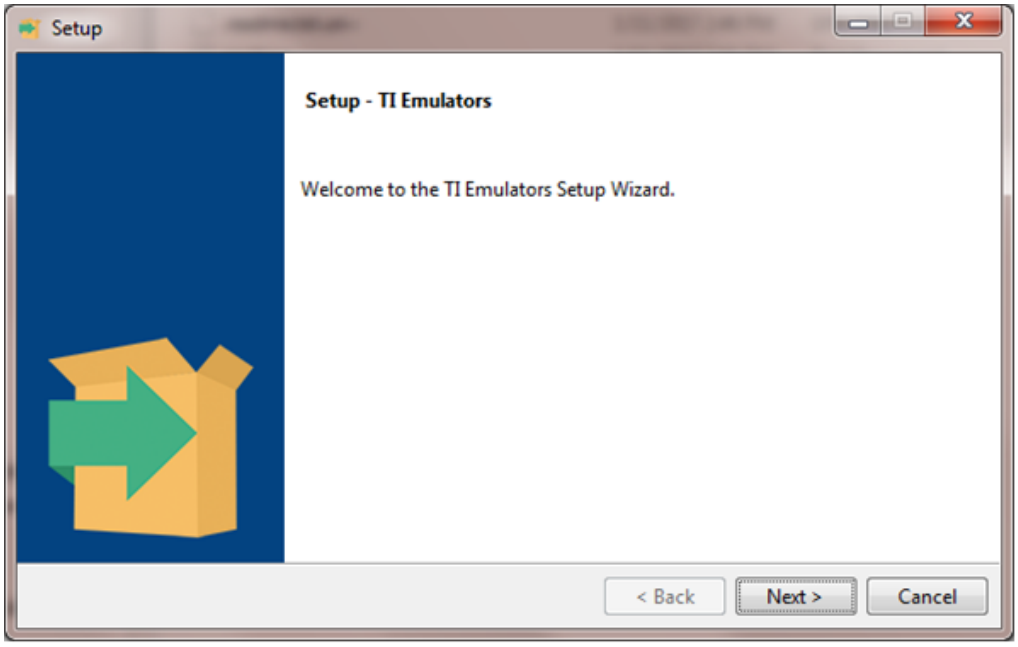

Figure 12. Windows Driver Installation

Copyright © 2017, Texas Instruments Incorporated

When prompted, click *Next* or *Install*. Depending on your Windows prior installation, there could be the multiple dialog boxes with similar questions. Choose *Next* or *Install* for all dialog boxes. Examples are shown in Figure 13 and Figure 14.

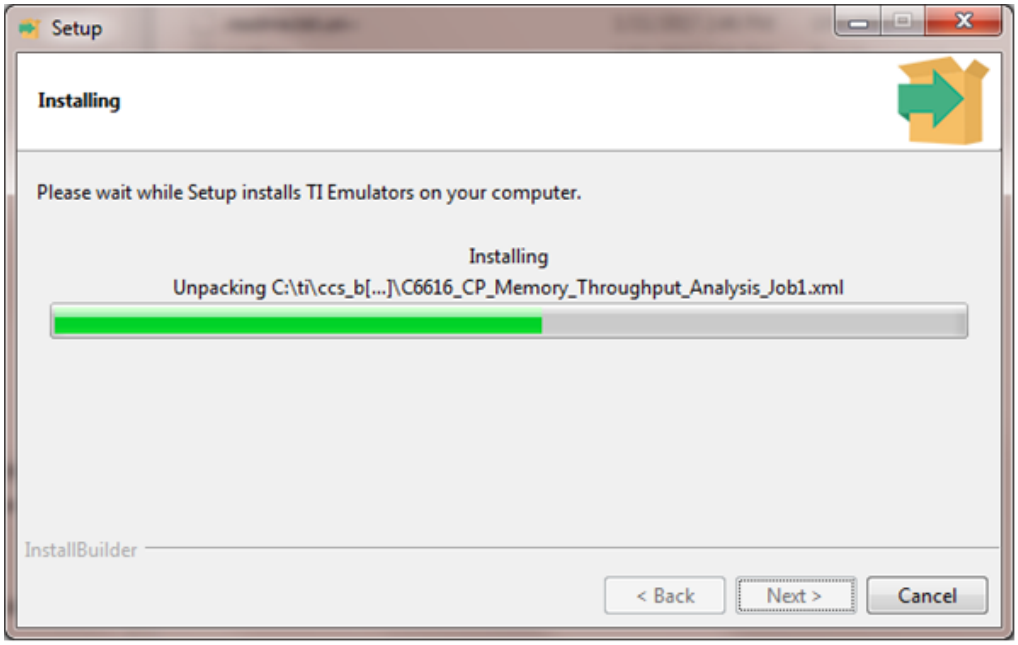

Figure 13. Driver Installation is in Progress

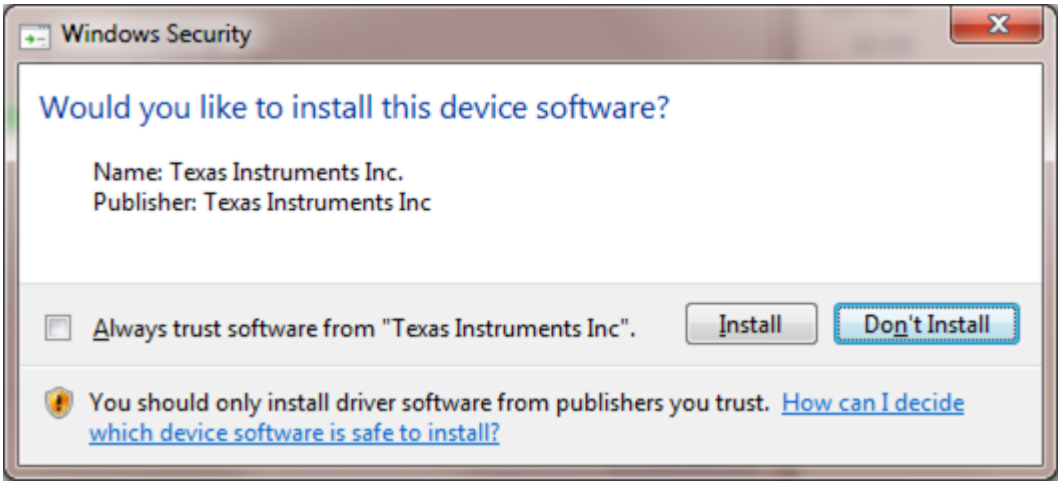

Figure 14. Additional Drivers Installation

Copyright © 2017, Texas Instruments Incorporated

Upon successful installation of the necessary drivers, the dialog box will say that *Setup has finished installing TI Emulators on your computer*. Click *Finish* (see Figure 15).

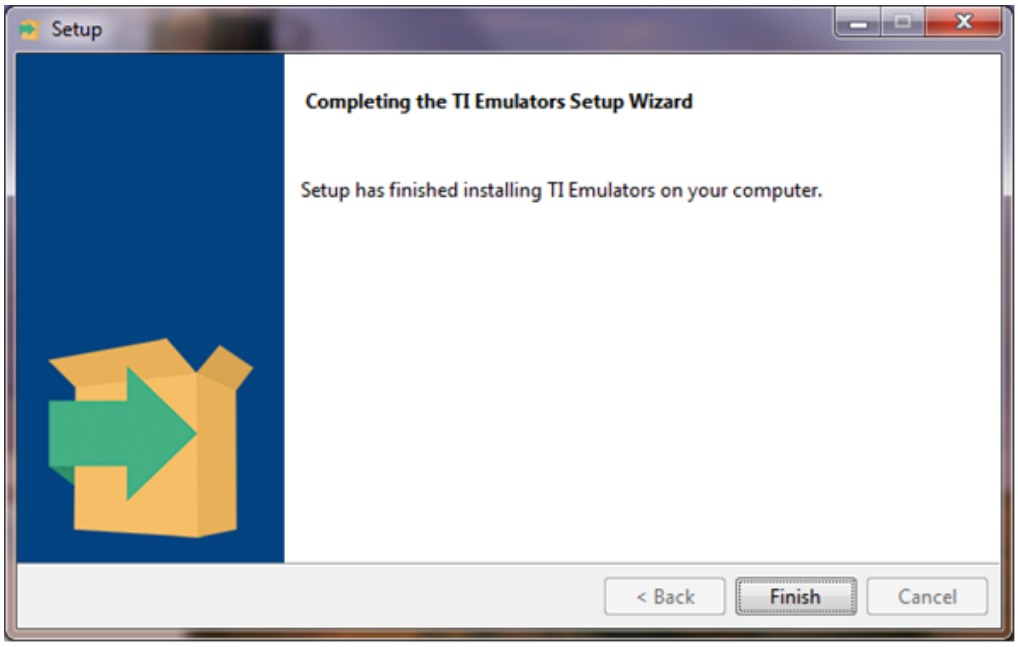

Figure 15. Windows Device Drivers Installation Successful

The driver installation process may take a few minutes depending on the PC's speed. If the installation is successful, proceed to the next step.

If there are issues during installation, reboot the PC and try the process again. If problem persists, please visit http://processors.wiki.ti.com/index.php/XDS_Emulation_Software_Package for solutions.

Copyright © 2017, Texas Instruments Incorporated

4.2 GUI Application Software Installation

To start the installation process, navigate to the BOOSTXL-TLV8544PIR folder, right-click on *setup.exe* and select *Run as administrator*. Default settings are recommended for all steps.

After accepting the license agreement, then the next dialog box determines the location of the directory for installing the GUI application software. Keep default selections and click *Next* (see Figure 16).

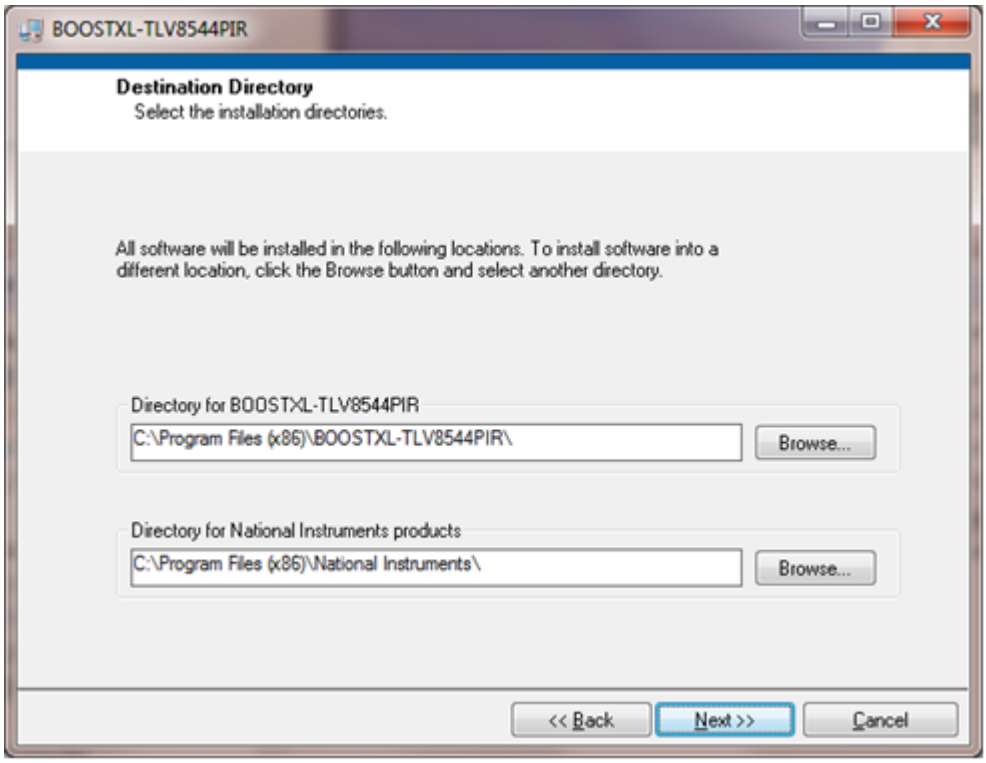

Figure 16. Use Default Settings and Click on *Next>>*

The next dialog indicates the installation status with status bars. See Figure 17.

Copyright © 2017, Texas Instruments Incorporated

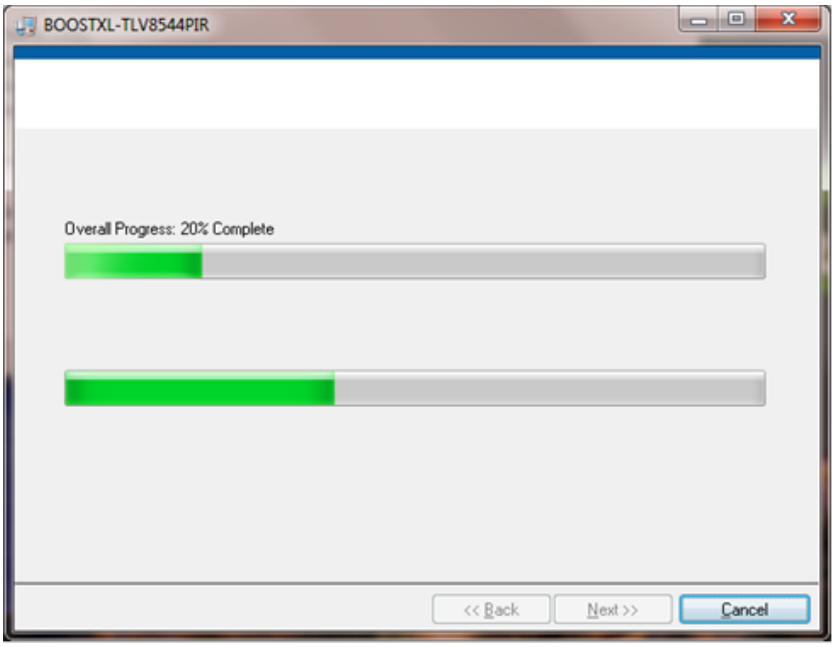

Figure 17. Installation is in Progress

At the conclusion of installation, the dialog box indicates completion with the message *The installer has finished updating your system*. When this dialog box appears, click *Next*. See Figure 18.

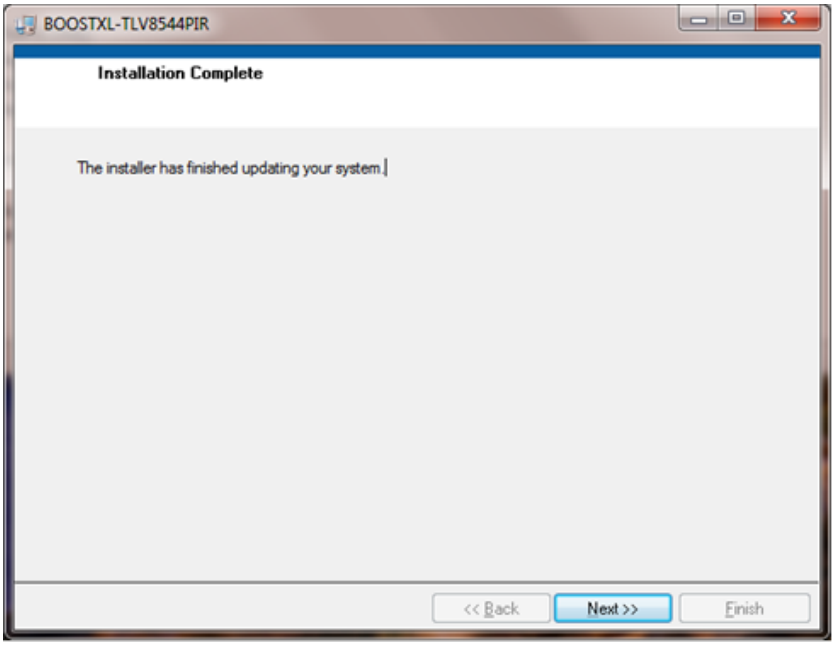

Figure 18. Installation is Almost Done, Click on *Next>>* to Finish

Once the application software has been installed, the application icon labeled *BOOSTXL-TLV8544PIR* is placed on the Windows Desktop (see Figure 19).

Copyright © 2017, Texas Instruments Incorporated



Figure 19. An Icon With Label *tlv8544* is Placed on Windows Desktop as Well as at Start Menu

Copyright © 2017, Texas Instruments Incorporated

5 Running the Application

5.1 Setup the Hardware Modules

If the BoosterPack is shipped separately from the LaunchPad board, it needs to be mounted on the CC2650 LaunchPad board. Use the following photo (Figure 20) as a guide for placement and alignment. Make sure all pins are settled before applying force on the BoosterPack to push it in place.

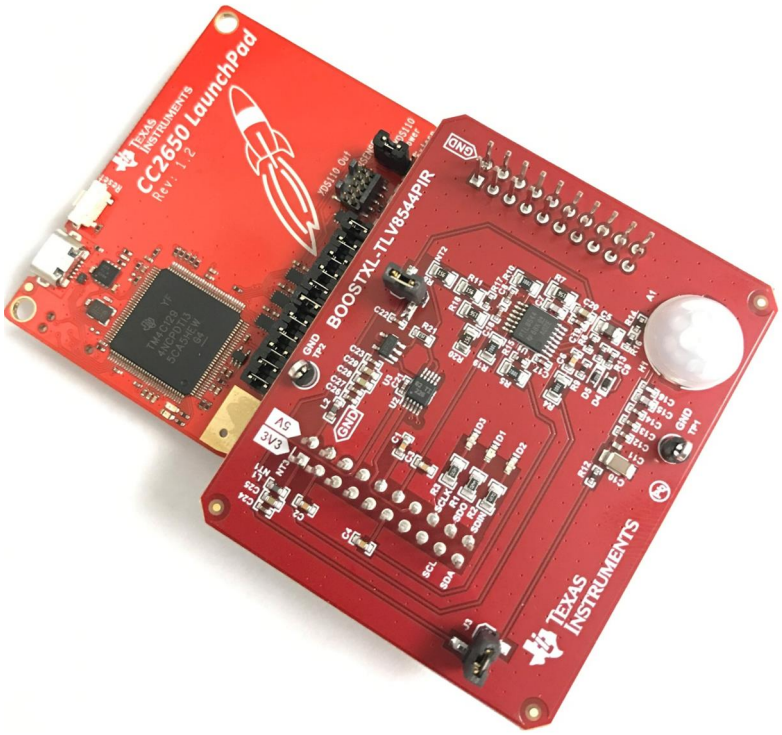

Figure 20. BOOSTXL-TLV8544PIR BoosterPack Mounted on CC2650 LaunchPad

Connect the provided micro USB cable to the PC using the type-A USB plug and micro USB plug to the LaunchPad. The micro USB socket on the LaunchPad is shown in Figure 21.

Copyright © 2017, Texas Instruments Incorporated

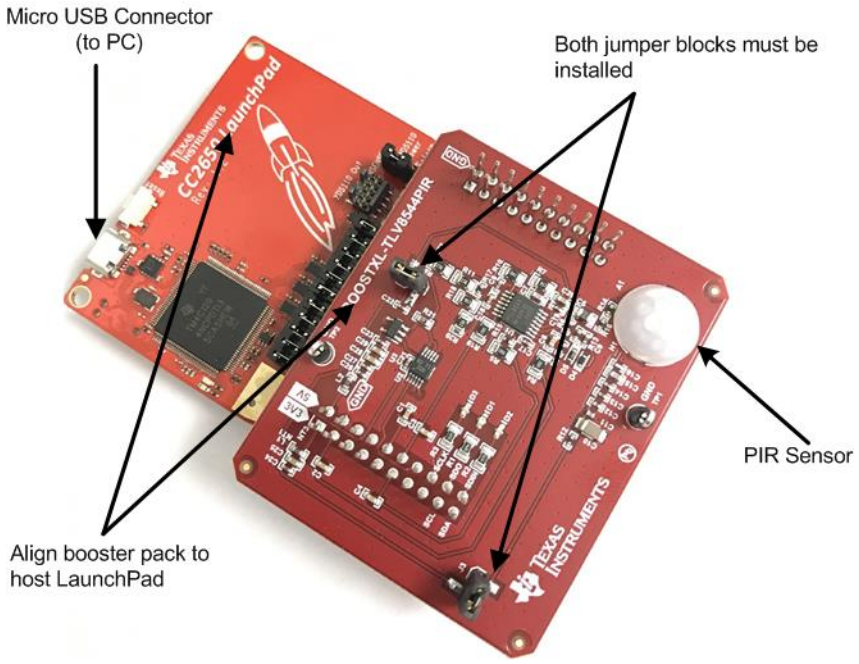

Note that both jumper blocks must be installed for proper operation.

Figure 21. BOOSTXL-TLV8544PIR BoosterPack Mounted on CC2650 LaunchPad

5.2 Run the Application

To run the application, click on the application icon labeled *BOOSTXL-TLV8544PIR* and the following screen (Figure 22) appears:

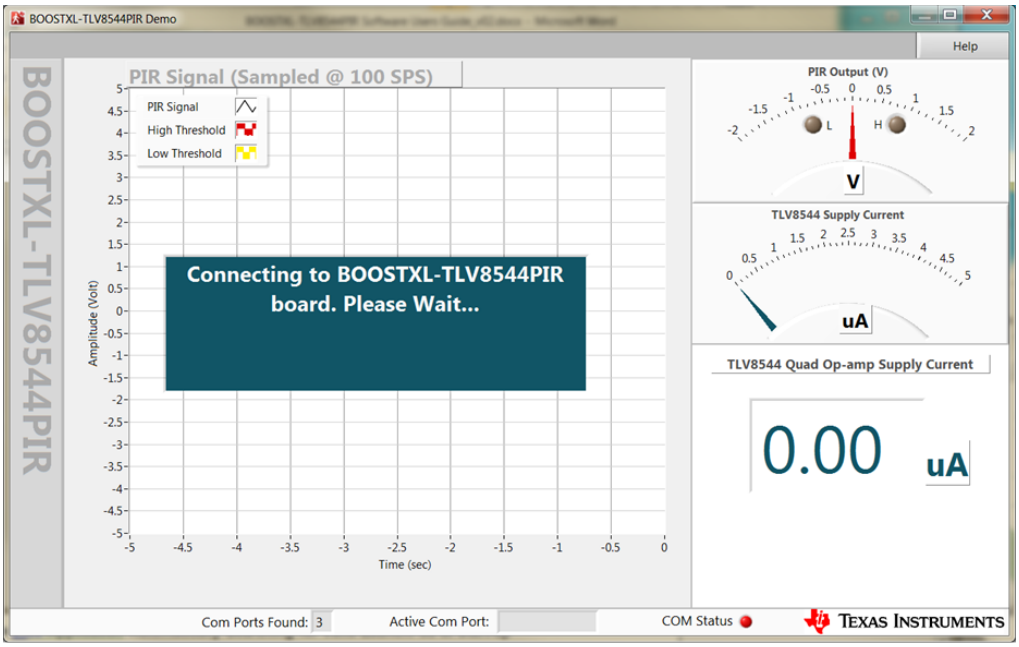

Figure 22. Application Automatically Searching for Valid LaunchPad at Start-Up

If a valid COM port is discovered, the application starts automatically. Go to the next step.

Otherwise, the following dialog (Figure 23) is shown.

Copyright © 2017, Texas Instruments Incorporated



Figure 23. The Application Can't Find Valid LaunchPad to Connect

In this case, click on the *Quit* button and the software will exit. Check the *Windows Device* driver has been properly installed detailed in Section 3.1. Click on the icon again to re-launch the application. If the same issue persists, unplug the USB connector find another USB port to use. If no other port available, just remove and insert it into the same port.

Once the application starts, the following screen appears (see Figure 24). Note that for the first time the BoosterPack is powered up, there is up to 30-second delay before the output becomes valid.

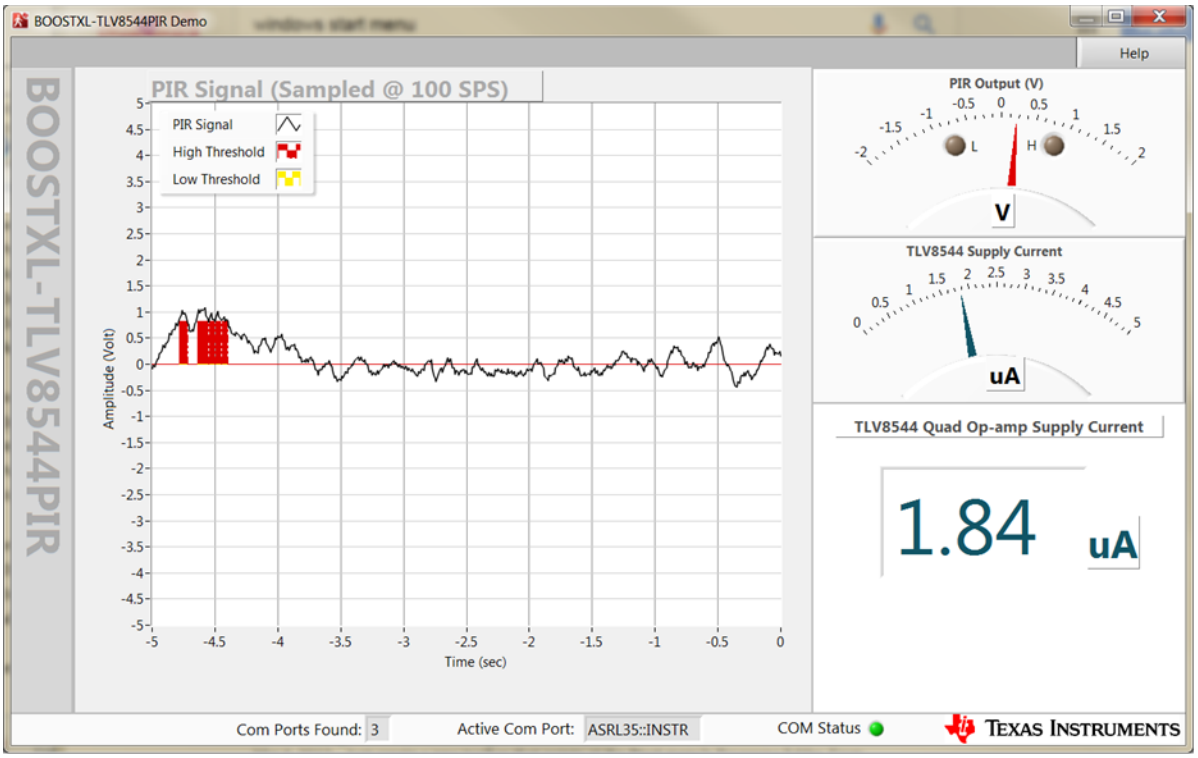

Figure 24. Application Running

Copyright © 2017, Texas Instruments Incorporated

5.3 Virtual Indicators vs Physical Waveforms

The GUI software uses a virtual presentation scheme to showcase the system's primary benefits. It's important to understand the differences and connections between virtual presentation versus actual measurement. The following diagram shows the relationship between the virtual indicators and the actual measurement. The digital output from the window comparator is presented as virtual indicators for threshold-crossing events. These virtual indicators are time-aligned with the edges of comparator's output signal. The height of the indicators is determined by the respective threshold values (that is, ¾ V_{CC} for high threshold red virtual indicator, and so forth). Both virtual indicators are rooted on the virtual ground which is set at ½ V_{CC}.

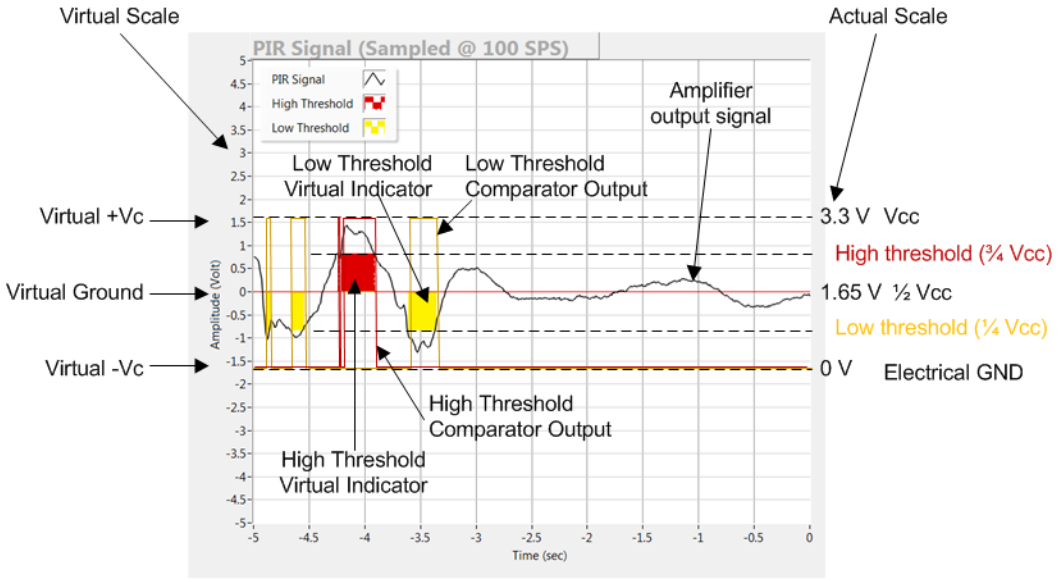

Figure 25. Virtual Indicators vs. Actual Waveforms

Copyright © 2017, Texas Instruments Incorporated

5.4 Application Details

The application has only one screen which presents the essential benefits and capabilities of TLV8544 with a real-time data plot and supply current values. Figure 26 provides details on each section of the screen content.

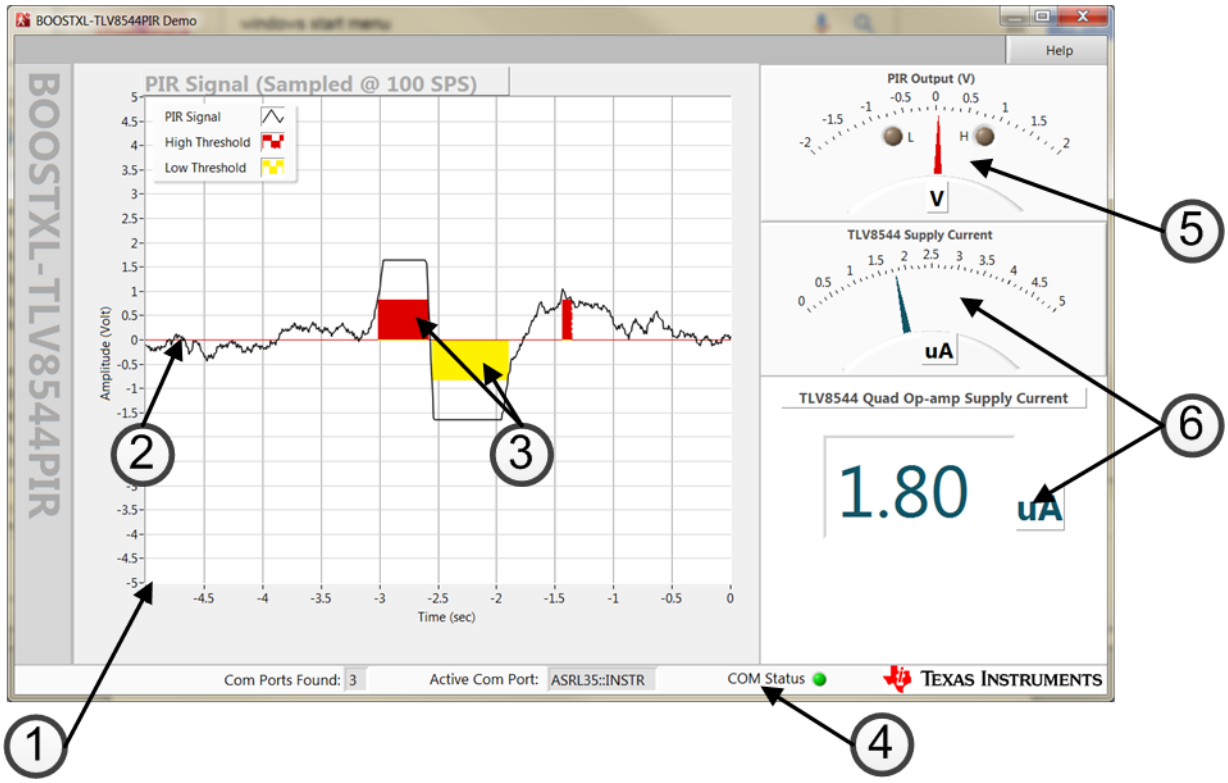

Figure 26. Application Details

1. Real-time plot of TLV8544 output waveform and indicators sampled at 100 SPS
2. Analog signal from the second op-amp stage
3. Threshold markers for high- and low-thresholds crossing
4. Automated virtual COM port connection status
5. Real-time analog output signal gauge
6. Real-time TLV8544 supply current gauge and digital read out

5.4.1 Real-Time Signal Plot

Real-time data acquired from TLV8544 is presented in a time-aligned motion chart. The data is acquired with the CC2650 embedded ADC sampled at 100 SPS. Data is streamed in real time to the host GUI software over the virtual USB COM port. Timing accuracy is ensured by MCU's internal timer which avoids USB/Windows latency jitter impact on sampling accuracy.

The application firmware is running on TIRTOS (TI Real-Time OS) which provides excellent real-time performance.

Copyright © 2017, Texas Instruments Incorporated

5.4.2 Analog Signal From Second Op-Amp Stage

The real-time plot presents a rolling waveform which provides a time-variant view on the data in the context of real-time physical environment in which people are in motion.

The data is plotted as-is without post-processing or filtering. This provides a realistic representation of the performance, and benefits, of the TLV8544.

The TLV8544 is powered from a single 3.3-V supply and the reference voltage is established with a divider network. For a better illustration, the output analog signal is presented as ±1.65 V over a virtual ground base.

5.4.3 Threshold Markers for High- and Low-Thresholds

Two out of 4 op-amps in the quad package are used as comparators. The comparators' output is digital with full rail to rail swing. There are 2 thresholds provided with ¼ of full scale as the low threshold; ¾ of full scale as the high threshold. The 2 markers (yellow and red) in the plot use the threshold crossing points as the horizontal edges and respective high and low threshold levels as heights.

5.4.4 Automated Virtual COM Ports Scan and Connection

To make the software more user-friendly and to appeal a wider audience, special effort has been made to simplify the setup process. Upon application start-up, USB virtual COM ports are automatically scanned to locate the first valid Launchpad by monitoring a signature data sequence sent from the LaunchPad MCU. Once a valid device is found, connection is established automatically without user's intervention.

When the process is completed successfully, the green COM Status indicator at the bottom status bar is turned on. Otherwise, the red indicator is turned on if the application has failed to connect. In this case, quite the application, unplug the PC side USB connector and re-plug it into another available USB port. Then re-launch the application and try again.

5.4.5 Analog Signal Gauge

The gauge provides a dynamic, instantaneous view of the analog reading from the second amplifier stage output.

5.4.6 Real-Time Supply Current

The supply current gauge shows the real-time instantaneous power consumption using a precision current sensor. The current reading is calibrated with a HP 3458A precision multi-meter and a 0.1% tolerance shunt-sensing resistor ensures consistency. The gauge is useful to report in-situ power consumption of op-amps under various operating conditions.

Copyright © 2017, Texas Instruments Incorporated

6 BOOSTXL-TLV8544PIR BoosterPack Schematics

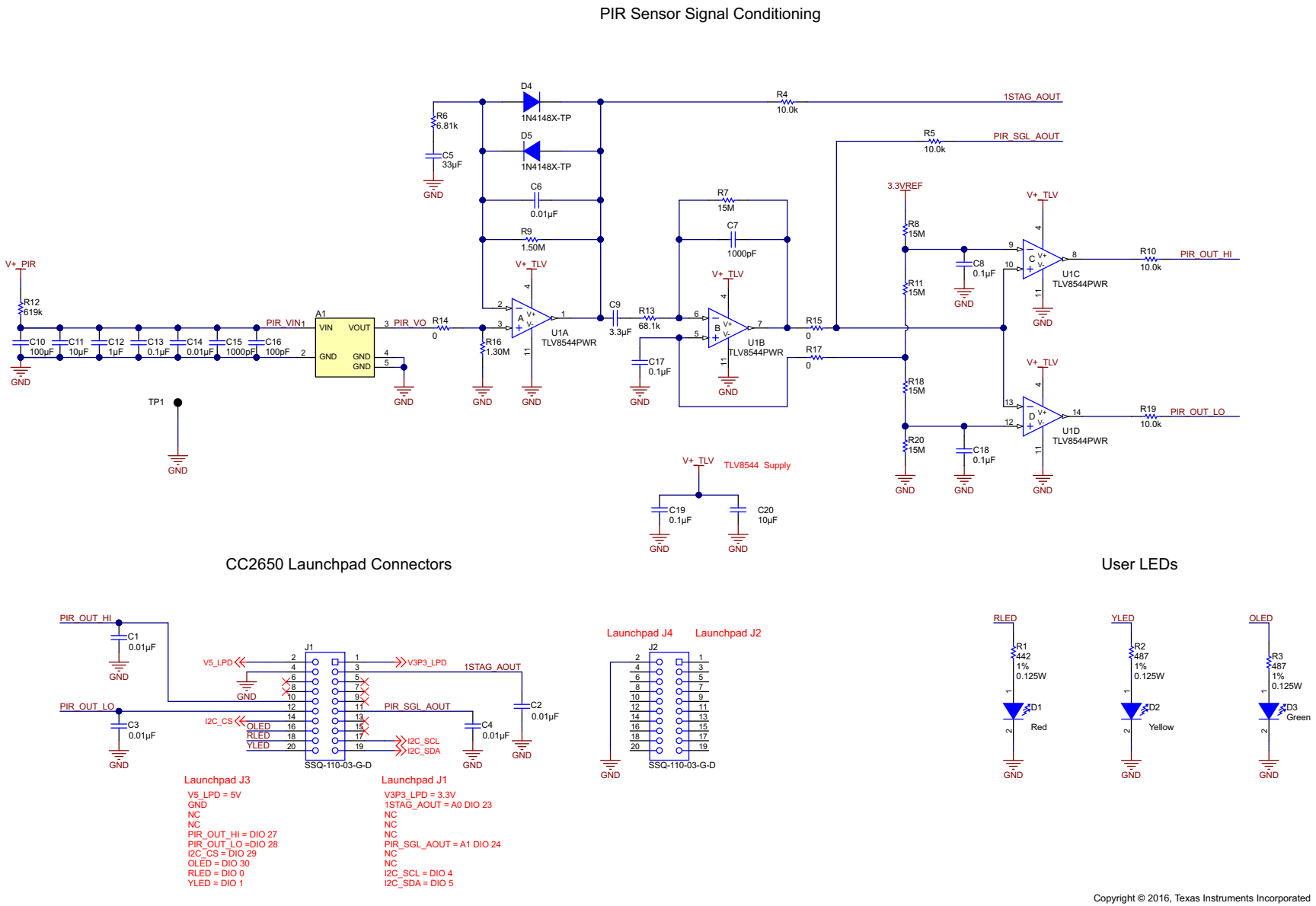

Figure 27. BOOSTXL-TLV8544PIR BoosterPack Schematic Page 1

Copyright © 2017, Texas Instruments Incorporated

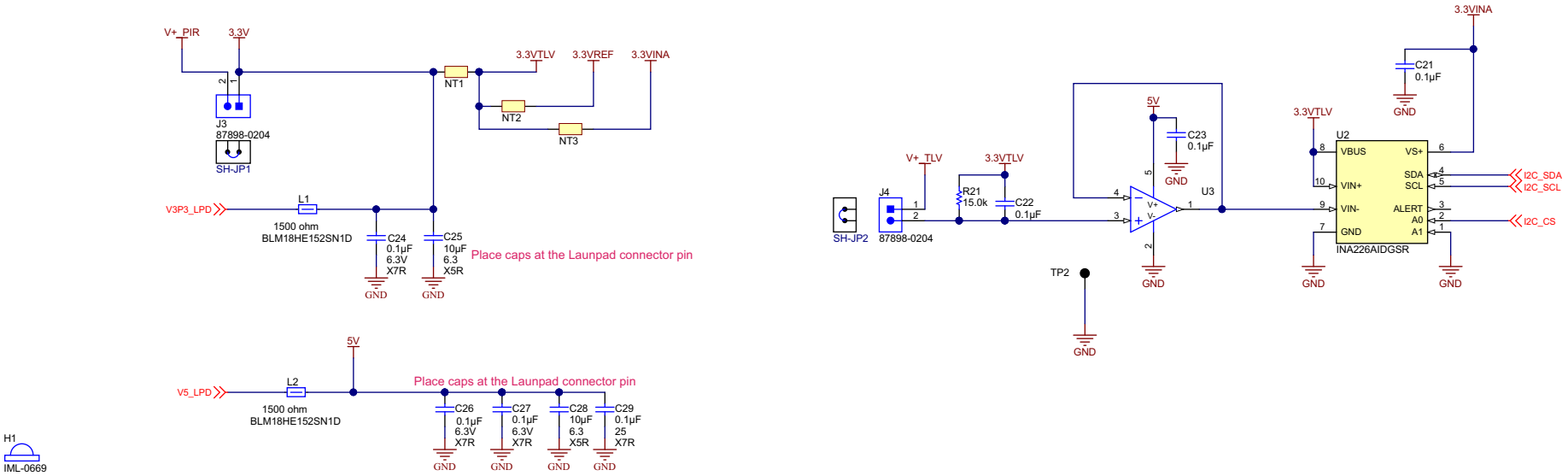

Copyright © 2016, Texas Instruments Incorporated

Figure 28. BOOSTXL-TLV8544PIR BoosterPack Schematic Page 2

Copyright © 2017, Texas Instruments Incorporated

Revision History

NOTE: Page numbers for previous revisions may differ from page numbers in the current version.

Changes from Original (March 2017) to A Revision	Page
• Added the SmartRF Flash Programmer download link to the firmware installation steps in Section 3.1	5
• Updated firmware installation steps in Section 3.1.1	5

Copyright © 2017, Texas Instruments Incorporated

IMPORTANT NOTICE FOR TI DESIGN INFORMATION AND RESOURCES

Texas Instruments Incorporated ('TI") technical, application or other design advice, services or information, including, but not limited to, reference designs and materials relating to evaluation modules, (collectively, "TI Resources") are intended to assist designers who are developing applications that incorporate TI products; by downloading, accessing or using any particular TI Resource in any way, you (individually or, if you are acting on behalf of a company, your company) agree to use it solely for this purpose and subject to the terms of this Notice.

TI's provision of TI Resources does not expand or otherwise alter TI's applicable published warranties or warranty disclaimers for TI products, and no additional obligations or liabilities arise from TI providing such TI Resources. TI reserves the right to make corrections, enhancements, improvements and other changes to its TI Resources.

You understand and agree that you remain responsible for using your independent analysis, evaluation and judgment in designing your applications and that you have full and exclusive responsibility to assure the safety of your applications and compliance of your applications (and of all TI products used in or for your applications) with all applicable regulations, laws and other applicable requirements. You represent that, with respect to your applications, you have all the necessary expertise to create and implement safeguards that (1) anticipate dangerous consequences of failures, (2) monitor failures and their consequences, and (3) lessen the likelihood of failures that might cause harm and take appropriate actions. You agree that prior to using or distributing any applications that include TI products, you will thoroughly test such applications and the functionality of such TI products as used in such applications. TI has not conducted any testing other than that specifically described in the published documentation for a particular TI Resource.

You are authorized to use, copy and modify any individual TI Resource only in connection with the development of applications that include the TI product(s) identified in such TI Resource. NO OTHER LICENSE, EXPRESS OR IMPLIED, BY ESTOPPEL OR OTHERWISE TO ANY OTHER TI INTELLECTUAL PROPERTY RIGHT, AND NO LICENSE TO ANY TECHNOLOGY OR INTELLECTUAL PROPERTY RIGHT OF TI OR ANY THIRD PARTY IS GRANTED HEREIN, including but not limited to any patent right, copyright, mask work right, or other intellectual property right relating to any combination, machine, or process in which TI products or services are used. Information regarding or referencing third-party products or services does not constitute a license to use such products or services, or a warranty or endorsement thereof. Use of TI Resources may require a license from a third party under the patents or other intellectual property of the third party, or a license from TI under the patents or other intellectual property of TI.

TI RESOURCES ARE PROVIDED "AS IS" AND WITH ALL FAULTS. TI DISCLAIMS ALL OTHER WARRANTIES OR REPRESENTATIONS, EXPRESS OR IMPLIED, REGARDING TI RESOURCES OR USE THEREOF, INCLUDING BUT NOT LIMITED TO ACCURACY OR COMPLETENESS, TITLE, ANY EPIDEMIC FAILURE WARRANTY AND ANY IMPLIED WARRANTIES OF MERCHANTABILITY, FITNESS FOR A PARTICULAR PURPOSE, AND NON-INFRINGEMENT OF ANY THIRD PARTY INTELLECTUAL PROPERTY RIGHTS.

TI SHALL NOT BE LIABLE FOR AND SHALL NOT DEFEND OR INDEMNIFY YOU AGAINST ANY CLAIM, INCLUDING BUT NOT LIMITED TO ANY INFRINGEMENT CLAIM THAT RELATES TO OR IS BASED ON ANY COMBINATION OF PRODUCTS EVEN IF DESCRIBED IN TI RESOURCES OR OTHERWISE. IN NO EVENT SHALL TI BE LIABLE FOR ANY ACTUAL, DIRECT, SPECIAL, COLLATERAL, INDIRECT, PUNITIVE, INCIDENTAL, CONSEQUENTIAL OR EXEMPLARY DAMAGES IN CONNECTION WITH OR ARISING OUT OF TI RESOURCES OR USE THEREOF, AND REGARDLESS OF WHETHER TI HAS BEEN ADVISED OF THE POSSIBILITY OF SUCH DAMAGES.

You agree to fully indemnify TI and its representatives against any damages, costs, losses, and/or liabilities arising out of your non-compliance with the terms and provisions of this Notice.

This Notice applies to TI Resources. Additional terms apply to the use and purchase of certain types of materials, TI products and services. These include; without limitation, TI's standard terms for semiconductor products http://www.ti.com/sc/docs/stdterms.htm), evaluation modules, and samples (http://www.ti.com/sc/docs/sampterms.htm).

Mailing Address: Texas Instruments, Post Office Box 655303, Dallas, Texas 75265
Copyright © 2018, Texas Instruments Incorporated