BOOSTXL-DRV8320RS EVM User's Guide

This document is provided with the BOOSTXL-DRV8320RS customer evaluation module (EVM) as a supplement to the *DRV832x 6 to 60-V Three-Phase Smart Gate Driver Data Sheet*. This user's guide details the hardware implementation of the EVM and introduces accompanying software.

NOTE: Follow the general ESD precautionary measures when operating this EVM.

Contents

1 Introduction 2
1.1 Overview 2
1.2 Purpose and Scope 2
2 Hardware and Software Overview 3
2.1 Hardware Connections Overview – DRV8320RS + TMS320F28004xC 3
2.2 Connection Details 4
2.3 LED Lights 7
2.4 Interfacing DRV8320RS and TMS320F280049C LaunchPad 8
3 Getting Started 10
3.1 Install the MotorControl SDK 10
3.2 Hardware Setup 10
4 References 10

List of Figures

1 Block Diagram 2
2 Hardware Connections Overview 3
3 Connections 4
4 Jumper Connections 1 5
5 Micro-USB Connection 6
6 Switches and LED Functions 7

List of Tables

1 J1 BOOSTXL-DRV8320RS Pin Connections 8
2 J2 BOOSTXL-DRV8320RS Pin Connections 8
3 J3 BOOSTXL-DRV8320RS Pin Connections 9
4 J4 BOOSTXL-DRV8320RS Pin Connections 9
5 Configurations Table 10

Trademarks

C2000, Piccolo, InstaSPIN, BoosterPack are trademarks of Texas Instruments.
All other trademarks are the property of their respective owners.

Copyright © 2018–2019, Texas Instruments Incorporated

1 Introduction

1.1 Overview

The DRV8320RS is a gate driver IC for three phase motor drive applications. It provides three high-accuracy trimmed and temperature-compensated half bridge drivers, each capable of driving a high-side and low-side N-type MOSFET.

The DRV8320RS uses SPI to provide detailed fault reporting and flexible parameter settings such as current control options for slew rate control of the gate drivers and various protection features.

BOOSTXL-DRV8320RS has been designed to work with the LAUNCHXL-F280049C LaunchPad. The C2000™ Piccolo™ TMS320F280049C has integrated programmable gain amplifiers (PGA), which allow for a low cost method of current sensing. This completely eliminates the need for external op-amps.

A full suite of software for evaluation of the DRV8320RS, F28004xC and InstaSPIN™-FOC can be found in the C2000Ware MotorControl SDK.

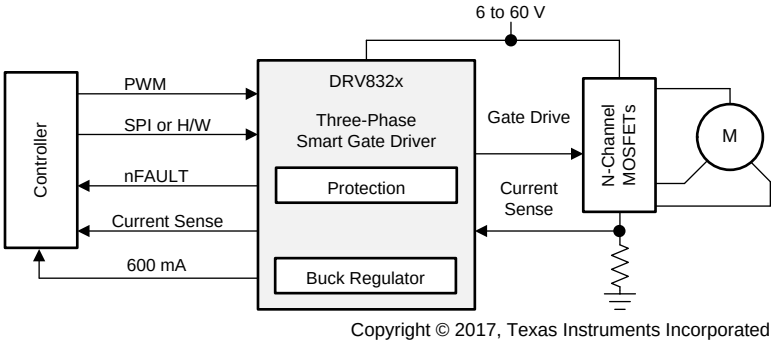

Copyright © 2017, Texas Instruments Incorporated

Figure 1. Block Diagram

1.2 Purpose and Scope

This document is designed to be used as a startup guide and to supplement the MotorControl SDK. This document is intended for the engineers involved in the design, implementation, and validation of the DRV832xx gate driver with a TMS320F28004xC device.

The scope of this document is to provide the user with a guide to evaluate the DRV8320RS device with a LAUNCHXL-F280049C development kit. This document covers the hardware connections required between DRV8320RS and the LaunchPad development kit. When the HW connections are complete, the user is required to download the MotorControl SDK to spin a motor.

Copyright © 2018–2019, Texas Instruments Incorporated

2 Hardware and Software Overview

2.1 Hardware Connections Overview – DRV8320RS + TMS320F28004xC

Figure 2 shows the major blocks of the hardware where the BOOSTXL-DRV8320RS BoosterPack™ plug-in module is mounted on the LAUNCHXL-F280049C LaunchPad development kit. The BOOSTXL-DRV8320RS is designed for an input supply from 6 to 54 V and up to 15-A drive current. Three half h-bridges capable of driving a three-phase BLDC motor using sensorless field oriented or vector control. The 3.3-V supply to the LaunchPad is derived by the LMR16006XDDCR buck converter integrated in the DRV8320RS.

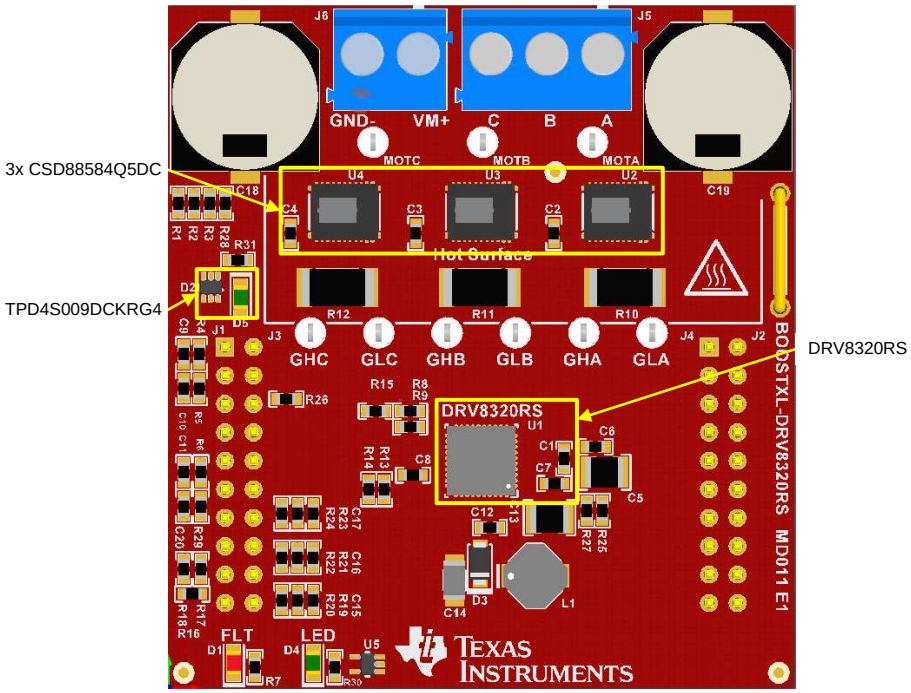

Figure 2. Hardware Connections Overview

Copyright © 2018–2019, Texas Instruments Incorporated

2.2 Connection Details

Figure 3 shows the power connector and motor phase connector. A supply voltage ranging from 6 to 54 V from a battery or a DC voltage source is connected to the voltage supply pins. Three phases of the BLDC motor are connected to the three-phase motor socket provided on the BOOSTXL-DRV8320RS.

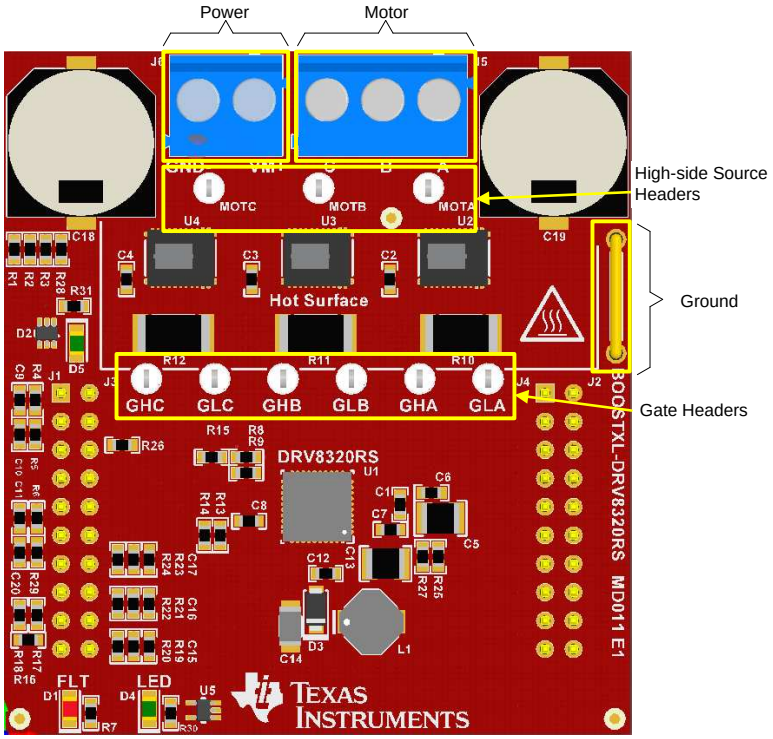

Figure 3. Connections

Copyright © 2018–2019, Texas Instruments Incorporated

Figure 4 and show the connections required for the proper functioning of the software. A detailed description of each pin's function can be found in Table 1.

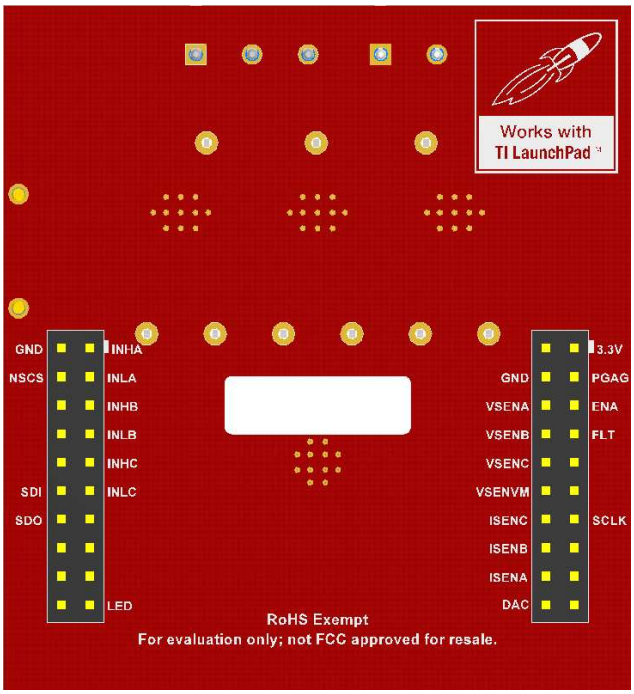

Figure 4. Jumper Connections 1

Copyright © 2018–2019, Texas Instruments Incorporated

Figure 5 shows the LAUNCHXL-F2800049C. Only one cable is required to provide communication and power to the LaunchPad's onboard XDS110 emulator. Because the DRV8320RS provides power to the F280049C it is important to configure the jumpers as described in Table 5 to avoid shunting separate sources together.

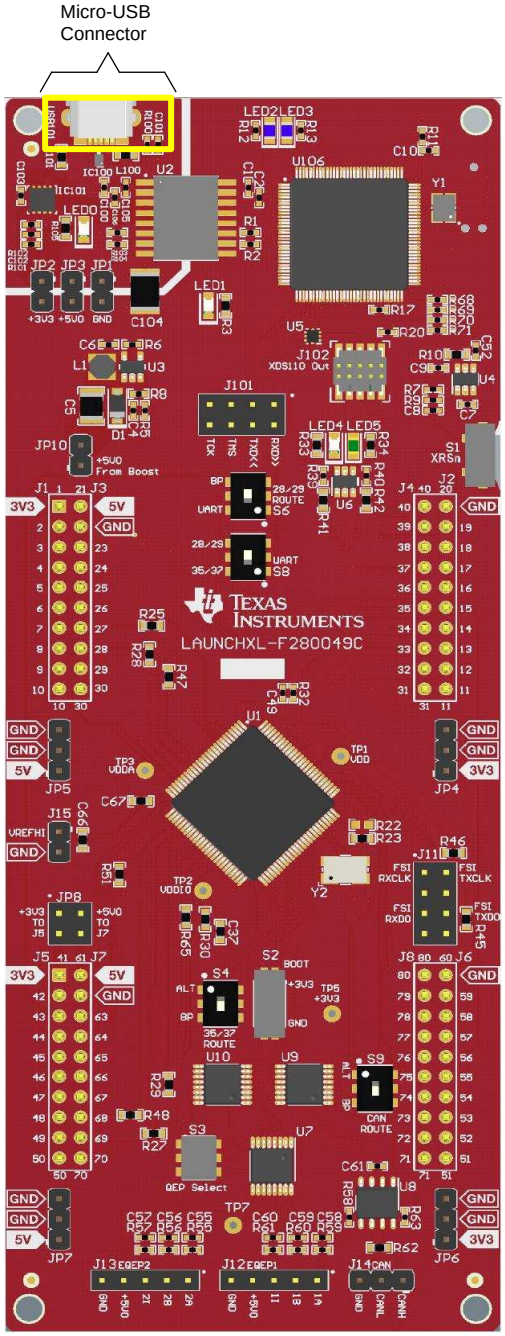

Figure 5. Micro-USB Connection

Copyright © 2018–2019, Texas Instruments Incorporated

2.3 LED Lights

Two LEDs have been provided to indicate different statuses of the motor controller.

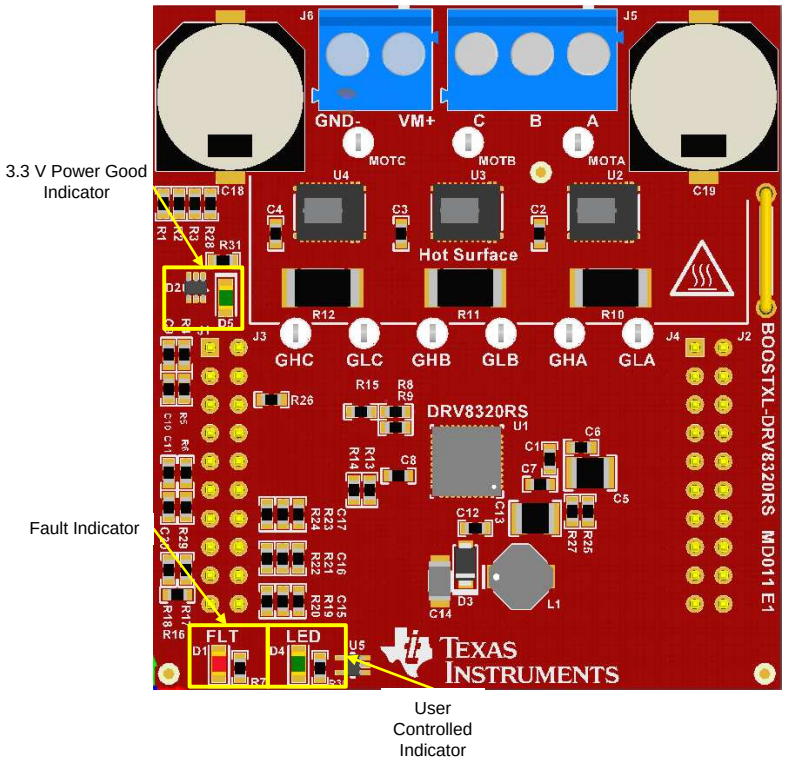

Figure 6. Switches and LED Functions

"FLT" and "LED" LEDs — The fault(FLT) LED is controlled by the DRV8320's "Fault" pin. The fault pin is driven by the DRV8320X to indicate a wide variety of warning and error conditions. Descriptions of these can be found in the *DRV832x 6 to 60-V Three-Phase Smart Gate Driver Data Sheet*. The LED marked "LED" is available for the user to control and is active low.

Copyright © 2018–2019, Texas Instruments Incorporated

2.4 Interfacing DRV8320RS and TMS320F280049C LaunchPad

The DRV8320RS device has 40 pins with different functions. These pins are interfaced with the LAUNCHXL-F280049C, which is mapped appropriately to receive the functionality of the BoosterPack plug-in module. These 40 pins are grouped into 4 ports. Table 1 lists the interfacing of these ports with the TMS320F280049C device.

Table 1. J1 BOOSTXL-DRV8320RS Pin Connections

	BOOSTXL-DRV8320RS Function	LAUNCHXL-F280049 Site1 Function	LAUNCHXL-F280049 Site2 Function	Description
J1 Header				
1	3.3 V	3.3 V	3.3 V	3.3 V LaunchPad supply
2	PGA Ground	PGA1/3/5_GND	PGA2/6/6_	Current sense ground
3	Enable	GPIO13	GPIO28	Logic low to enter a low-power sleep mode
4	nFault	GPIO40	GPIO29	Pulled logic low during a fault condition
5	—			
6	—			
7	SPI Clock	GPIO56 (SPI CLK)	GPIO22	Clock source for SPI
8	—			
9	—			
10	—			

Table 2. J2 BOOSTXL-DRV8320RS Pin Connections

J2 Header	BOOSTXL-DRV8320RS Function	LAUNCHXL-F280049 Site1 Function	LAUNCHXL-F280049 Site2 Function	Description
20	Ground	Ground	Ground	Device Ground
19	nSCS	GPIO57	GPIO27	Active low enables serial interface communication
18	—			
17	—			
16	—			
15	SDI	GPIO16 (SPI MOSI)	GPIO24	Data input to DRV832xx
14	SDO	GPIO17 (SPI MISO)	GPIO31	Data output from DRV832xx
13	—			
12	—			
11	—			

Copyright © 2018–2019, Texas Instruments Incorporated

Table 3. J3 BOOSTXL-DRV8320RS Pin Connections

J3 Header	BOOSTXL-DRV8320RS Function	LAUNCHXL-F280049 Site1 Function	LAUNCHXL-F280049 Site2 Function	Description
21	—			
22	Ground	Ground	Ground	Device Ground
23	Voltage sense A	ADCINA5	ADCINA6	Sensing A phase voltage
24	Voltage sense B	ADCINB0	ADCINA2	Sensing B phase voltage
25	Voltage sense C	ADCINC2	ADCINC14	Sensing C phase voltage
26	Voltage sense VM	ADCINB1	ADCINC1	Sensing VM voltage
27	Current sense A	PGA1_IN	PGA4_IN	Sensing A phase current
28	Current sense B	PGA3_IN	PGA6_IN	Sensing B phase current
29	Current sense C	PGA5_IN	PGA2_IN	Sensing C phase current
30	DAC bias input	DACB_OUT	DACA_OUT	Voltage Bias for phase current measurement

Table 4. J4 BOOSTXL-DRV8320RS Pin Connections

J4 Header	BOOSTXL-DRV8320RS Function	LAUNCHXL-F280049 Site1 Function	LAUNCHXL-F280049 Site2 Function	Description
40	INHA	GPIO10	GPIO0	High-side gate driver control input.
39	INLA	GPIO11	GPIO1	Low-side gate driver control input.
38	INHB	GPIO8	GPIO6	High-side gate driver control input.
37	INLB	GPIO9	GPIO7	Low-side gate driver control input.
36	INHC	GPIO4	GPIO2	High-side gate driver control input.
35	INLC	GPIO5	GPIO3	Low-side gate driver control input.
34	—			
33	—			
32	—			
31	LED	GPIO25	GPIO32	User-controlled LED

Copyright © 2018–2019, Texas Instruments Incorporated

3 Getting Started

3.1 Install the MotorControl SDK

The MotorControl SDK contains an entire suite of example software and labs written for the LAUNCHXL-F280049C + BOOSTXL-DRV8320RS. It features InstaSPIN-FOC which is a FOC solution that can identify, tune and control your motor in minutes.

3.2 Hardware Setup

The hardware required to run the motor controller is a LAUNCHXL-F280049C LaunchPad development kit, the BOOSTXL-DRV8320RS BoosterPack plug-in module, a Micro-USB cable, and a power supply with a DC output from 8 to 54 V. Follow these steps to start up the BoosterPack plug-in module:

Step 1. Dock the BoosterPack to the LaunchPad. Site 1 and Site 2 of the LaunchPad are supported by software.

NOTE: To determine orientation of the BoosterPack ensure that the power and ground pins line up with the LaunchPad.

NOTE: Depending on which site is used the user needs to ensure that the correct jumpers are populated. Table 5 details these configurations.

Table 5. Configurations Table

	Site 1	Site 2	Both Site 1 and Site 2
J1	Remove	Remove	Remove
J2			
J3			
j8 (2 jumpers)	Remove	Populate	Remove

Step 2. Connect the three phases from the brushless DC motor to the J5 connector on the BOOSTXL-DRV8320RS BoosterPack plug-in module. Phase A, B, and C are labeled in white silkscreen on the PCB top layer.

Step 3. Connect the DC power supply to header J1.

NOTE: Observe the correct polarity of +VM and GND connections on the BOOSTXL-DRV8320RS BoosterPack connection J1

Step 4. Connect a Micro-USB cable to the LaunchPad development kit and computer.

Step 5. Turn on the power supply and power up the PCB.

4 References

- *DRV832x 6 to 60-V Three-Phase Smart Gate Driver Data Sheet*
- *TMS320F28004x Piccolo™ Microcontrollers Data Manual*
- *TMS320F28004x Piccolo Microcontrollers Technical Reference Manual*
- *C2000 Piccolo F28004x Series LaunchPad Evaluation Kit*
- Hereby, DLP Design, Inc. declares that this evaluation kit is in compliance with the essential requirements and other relevant provisions of EN 61326-1:2013. The full text of the EU declaration of conformity is available at the following internet address: www.ti.com/lit/pdf/tipl12

Copyright © 2018–2019, Texas Instruments Incorporated

Revision History

NOTE: Page numbers for previous revisions may differ from page numbers in the current version.

Changes from Original (November 2018) to A Revision	Page
• Updates were made in Section 2.2.	4

Copyright © 2018–2019, Texas Instruments Incorporated

IMPORTANT NOTICE AND DISCLAIMER

TI PROVIDES TECHNICAL AND RELIABILITY DATA (INCLUDING DATASHEETS), DESIGN RESOURCES (INCLUDING REFERENCE DESIGNS), APPLICATION OR OTHER DESIGN ADVICE, WEB TOOLS, SAFETY INFORMATION, AND OTHER RESOURCES “AS IS” AND WITH ALL FAULTS, AND DISCLAIMS ALL WARRANTIES, EXPRESS AND IMPLIED, INCLUDING WITHOUT LIMITATION ANY IMPLIED WARRANTIES OF MERCHANTABILITY, FITNESS FOR A PARTICULAR PURPOSE OR NON-INFRINGEMENT OF THIRD PARTY INTELLECTUAL PROPERTY RIGHTS.

These resources are intended for skilled developers designing with TI products. You are solely responsible for (1) selecting the appropriate TI products for your application, (2) designing, validating and testing your application, and (3) ensuring your application meets applicable standards, and any other safety, security, or other requirements. These resources are subject to change without notice. TI grants you permission to use these resources only for development of an application that uses the TI products described in the resource. Other reproduction and display of these resources is prohibited. No license is granted to any other TI intellectual property right or to any third party intellectual property right. TI disclaims responsibility for, and you will fully indemnify TI and its representatives against, any claims, damages, costs, losses, and liabilities arising out of your use of these resources.

TI’s products are provided subject to TI’s Terms of Sale (www.ti.com/legal/termsofsale.html) or other applicable terms available either on ti.com or provided in conjunction with such TI products. TI’s provision of these resources does not expand or otherwise alter TI’s applicable warranties or warranty disclaimers for TI products.

Mailing Address: Texas Instruments, Post Office Box 655303, Dallas, Texas 75265
Copyright © 2019, Texas Instruments Incorporated