Technology to Inspire Innovation

JAE

RoHS Compliant

COAXIAL CONNECTORS

2008

CAT.NO.COAX-007A-E.FEB.2008

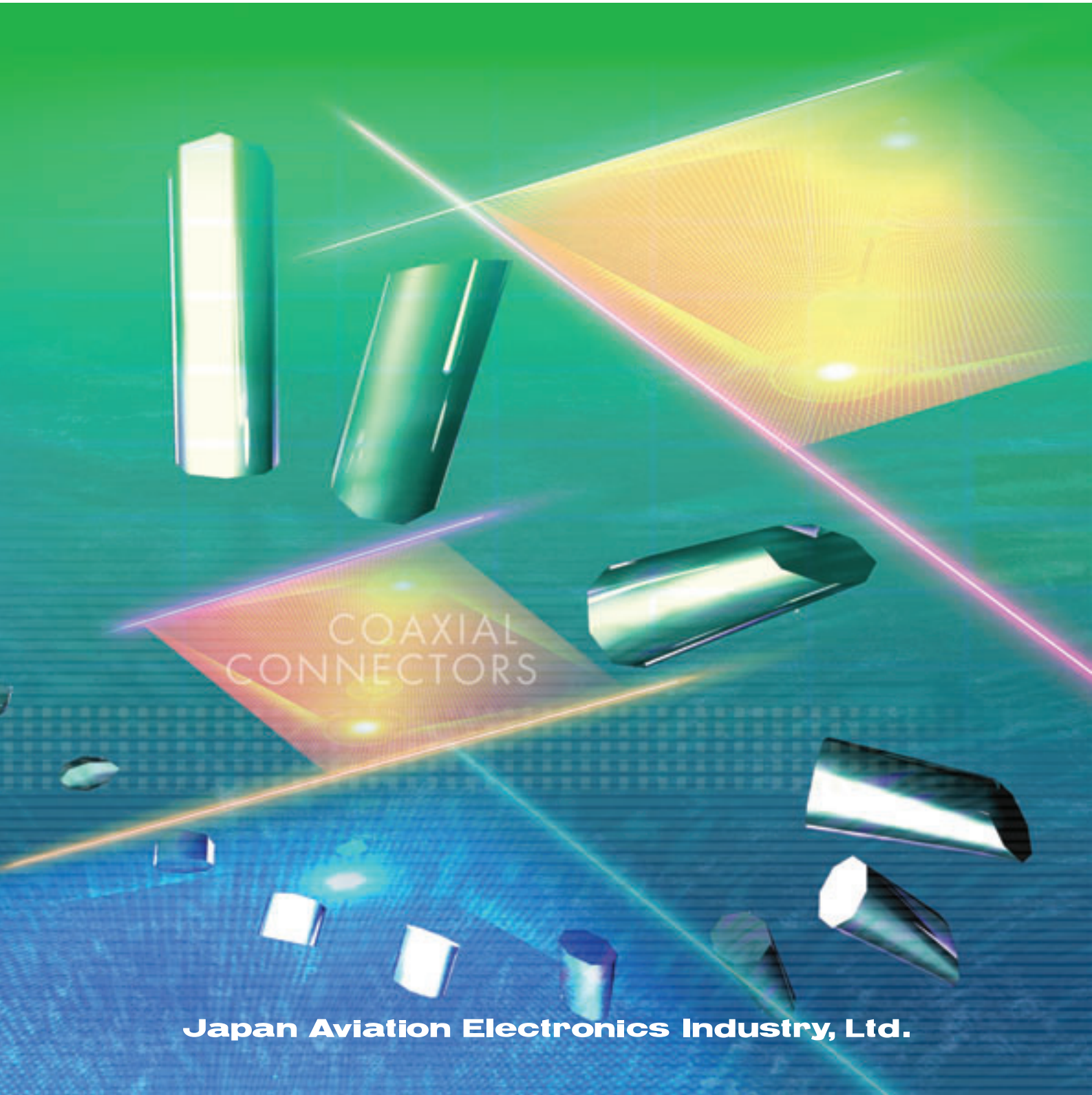

Japan Aviation Electronics Industry, Ltd.

■ FREQUENCY RANGE TO 3GHz (50Ω Type)
■ BAYONET COUPLING

BNC Series



BNC series are small size coaxial connectors, conforming to the general purpose standards (IEC60169-8).
Easy to operate bayonet lock, best suited for connection between indoor devices, involving frequent connecting and disconnecting.
Applicable frequencies : from DC up to 3GHz (50Ω) /DC up to 1.5GHz (75Ω). High performance with a VSWR (voltage standing wave ratio) of 1.2 or less.

- A wide variety of products enable various mounting styles.
- Two impedance models are available: 50 and 75 ohms. (Note)
- A high degree of reliability provides stable electric continuity and high frequency performance.
- Applications : Broadcasting Equipment, Various Audio-visual Equipment, Measuring Instruments

(Note) We recommend that you couple connectors with the same impedance (50Ω to 50Ω or 75Ω to 75Ω).

■SPECIFICATIONS

Characteristic Impedance	50Ω、75Ω
Frequency Range (Note)	50Ω : DC to 3GHz 75Ω : DC to 1.5GHz
D. W. Voltage	AC500Vr.m.s. (1minute)
Insulation Resistance	500 megohms min. (DC500V)
Contact Resistance	Center Contacts : 10 milliohms max. Outer Contacts : 5 milliohms max.
V. S. W. R.	1.2 max.
Applicable Cables	0.8C-V, 1.5C-V, 1.5C-W, 1.5D-V, 1.5D-W, 2.5D-V, 3C-V

(Note) For Right-angle receptacles, please consult us.

■MATERIALS/FINISHES

Description	Materials/Finishes
Contacts	Copper Alloy/Gold Plated over Nickel
Insulator	PTFE Part of Right-angle Receptacle : Polymethlypentene BNCS005C00 : PBT
Shell	Copper Alloy/Nickel Plated Right-angle Receptacle: Zinc Alloy/Nickel Plated over Copper BNCS003C00 : Zinc Alloy/Nickel Plated
Toothed Lock Washer	Stainless Steel BNCS003C00 : Copper Alloy/ Nickel Plated
Hexagon Nut	Copper Alloy/Nickel Plated
Sleeve	Copper Alloy/Nickel Plated
Ferrule	Copper Alloy/Nickel Plated

In addition to independent cable application type, we also harness products which satisfy your specification are available. Refer to pages 109 to 111 for details.

■Guide to Operation Manuals

When using any of these products, please confirm the following operation manuals.

- For 0.8C-V cables : JAHL-20028-1
- For 1.5C-V, 1.5C-W, 1.5D-V and 1.5D-W cables : JAHL-20028-2
- For 2.5D-V cables : JAHL-20028-3
- For 3C-V cables : JAHL-20028-4

■TYPES AND COMBINATIONS

Receptacle

●Bulkhead・Straight
P/N：BNCV001D00



●Through-hole Solder・Straight
P/N：BNCR001D00



●Through-hole Solder・Right-angle
P/N：BNCS002C00



●Through-hole Solder
Bulk Head・Right-angle
P/N：BNCS003C00



●Through-hole Solder
4 Contacts・Right-angle
P/N：BNCS005C00



Jack

●Bulkhead・Straight
P/N：BNCK00※***



●Panel Mount・Straight
P/N：4 Hole Mount・BNCH00※***



Plug

●Straight
P/N：BNCA00※***



●Right-angle
P/N：BNCB00※***



Dust Cap

●For Receptacle & Jack
P/N：BNCD001Z00



Adapter



Various adapters are available.
See pages 93 to 107.

■RECEPTACLE

Bulkhead Type・Through-hole Solder Type

Intermatable with PLUG (33 Page)

Dimensions in millimeters

■Bulkhead・Straight
Characteristic Impedance：50Ω
Part Number：BNCV001D00



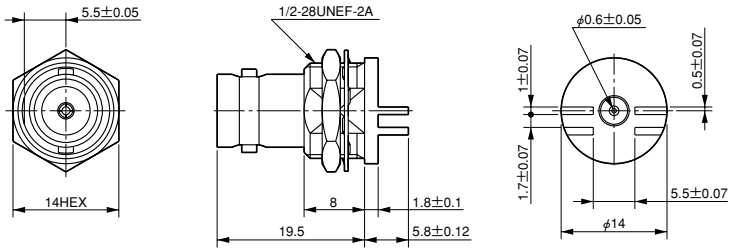

PANEL MOUNTING HOLE PATTERNS (REF.)
(PANEL THICKNESS:1 to 4mm)

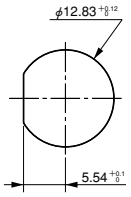

■Through-hole Solder・Straight
Characteristic Impedance：50Ω
Part Number：BNCR001D00



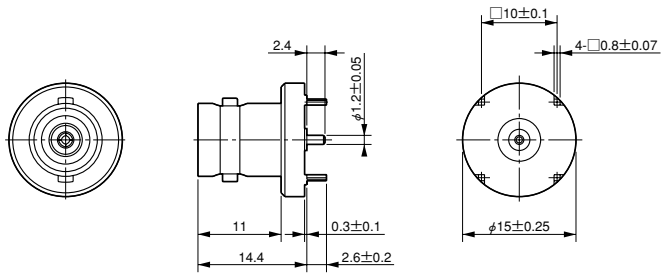

PC BOARD LAYOUT・MOUNTING SIDE (REF.)

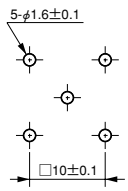

■Through-hole Solder・Right-angle
Characteristic Impedance：75Ω
Part Number：BNCS002C00



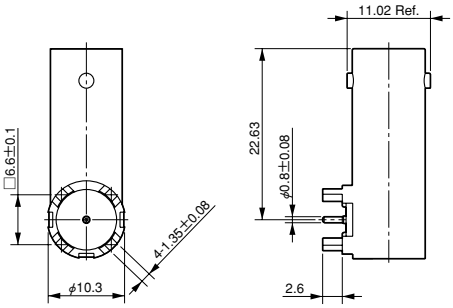

PC BOARD LAYOUT・MOUNTING SIDE (REF.)

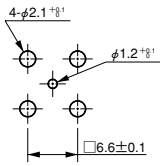

■RECEPTACLE

Through-hole Solder Type (Bulkhead)

Intermatable with PLUG (33 Page)

Dimensions in millimeters

■Right-angle
Characteristic Impedance : 75Ω
Part Number : BNCS003C00



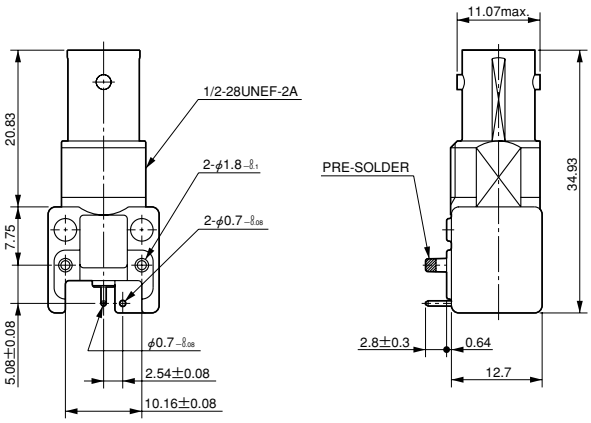

Attached Parts

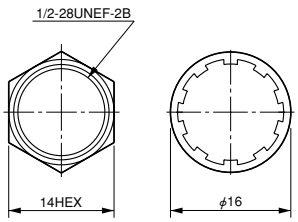

PC BOARD LAYOUT・MOUNTING SIDE (REF.)

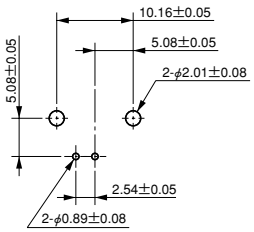

PANEL MOUNTING HOLE PATTERNS (REF.)
(PANEL THICKNESS : 1 to 4mm)

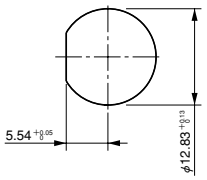

■RECEPTACLE

Through-hole Solder Type (4 Contacts Type)

Intermatable with PLUG (33 Page)

Dimensions in millimeters



■Right-angle
Characteristic Impedance : 75Ω
Part Number : BNCS005C00

(Note) For PC Board layout, please consult us.

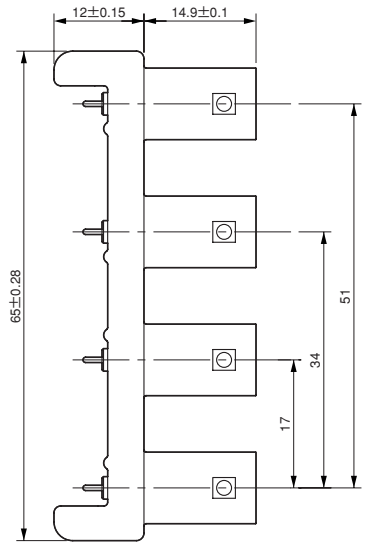

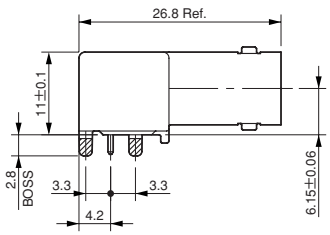

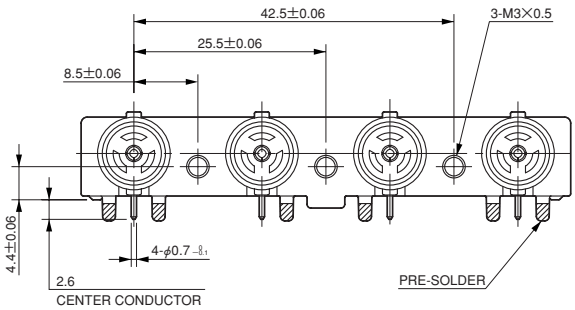

PANEL MOUNTING HOLE PATTERNS (REF.)
(PANEL THICKNESS : 1mm)

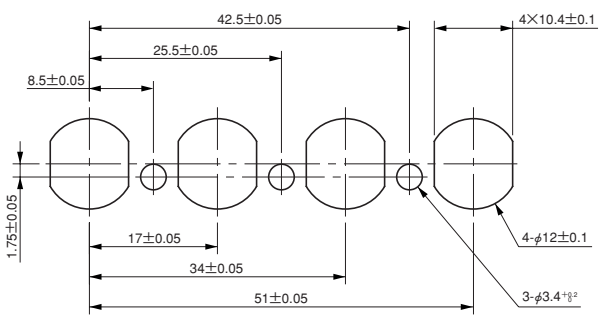

■JACK
Bulkhead Type・Panel Mount Type

Intermatable with PLUG (33 Page)

Dimensions in millimeters

■Bulkhead・Straight



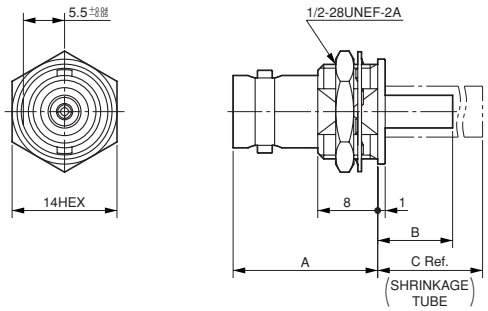

(Note) The picture on the above shows the BNCK002D37.
The shapes of other models vary slightly.

PANEL MOUNTING HOLE PATTERNS (REF.)
(PANEL THICKNESS : 2 to 4 mm)

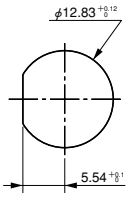

■Part Number/Dimensions

Cable Type (Equivalent)	Part Number	Characteristic Impedance	A	B	C ±2
1.5D-2V	BNCK002D37	50Ω	19	10	—
1.5D-2W	BNCK006D37	50Ω	19	9	21
2.5D-2V	BNCK003D13	50Ω	19	11	—
0.8C-2V	BNCK001C21	75Ω	20	8	—

(Note) Procedure for wire connection···See pages 113 to 120

■Panel mount・Straight
Four-hole Mount



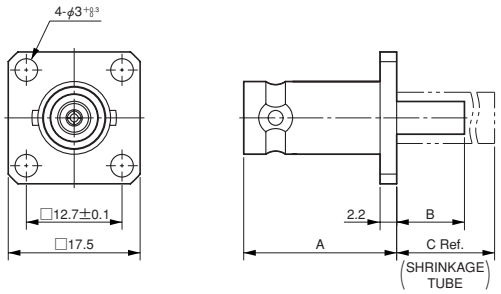

(Note) The picture on the above shows the BNCH002D37.
The shapes of other models vary slightly.

PANEL MOUNTING HOLE PATTERNS (REF.)

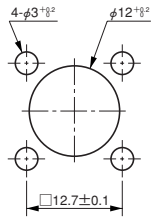

■Part Number/Dimensions

Cable Type (Equivalent)	Part Number	Characteristic Impedance	A	B	C Ref.
1.5D-2V	BNCH002D37	50Ω	20	9	—
1.5D-2W	BNCH005D37	50Ω	20	9	20
2.5D-2V	BNCH003D13	50Ω	20	10	—
0.8C-2V	BNCH001C21	75Ω	21	7	—

(Note) Procedure for wire connection···See pages 113 to 120

■PLUG

Intermatable with RECEPTACLE (29 to 31 Page) & JACK (32 Page)

Dimensions in millimeters

■Straight



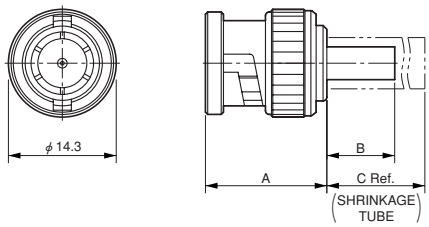

(Note) The picture on the above shows the BNCA003C37.
The shapes of other models vary slightly.

■Part Number/Dimensions

Cable Type (Equivalent)	Part Number	Characteristic Impedance	A	B	C Ref.
1.5C-2V	BNCA003C37	75Ω	16	9	—
1.5C-2W	BNCA006C37	75Ω	16	9	20
1.5D-2V	BNCA002D37	50Ω	16	9	—
1.5D-2W	BNCA005D37	50Ω	16	9	20
3C-2V	BNCA004C61	75Ω	16	12	—
0.8C-2V	BNCA001C21	75Ω	18	7	—

(Note) Procedure for wire connection···See pages 113 to 120

■Right-angle



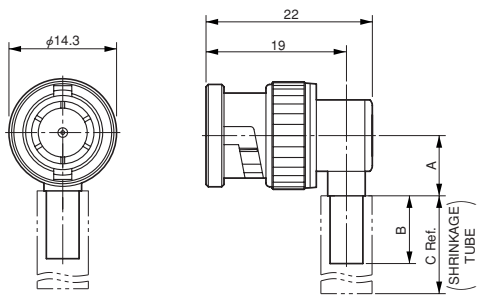

(Note) The picture on the above shows the BNCB002C37.
The shapes of other models vary slightly.

■Part Number/Dimensions

Cable Type (Equivalent)	Part Number	Characteristic Impedance	A	B	C Ref.
1.5C-2V	BNCB002C37	75Ω	7.8	9	—
1.5C-2W	BNCB005C37	75Ω	7.8	9	20
1.5D-2V	BNCB001D37	50Ω	7.8	9	—
1.5D-2W	BNCB004D37	50Ω	7.8	9	20
3C-2V	BNCB003C61	75Ω	8	12	—

(Note) Procedure for wire connection···See pages 113 to 120

■DUST CAP (For Receptacle & Jack)

Dimensions in millimeters

■Plastic Type
Part Number：BNCD001Z00



●Material：PVC

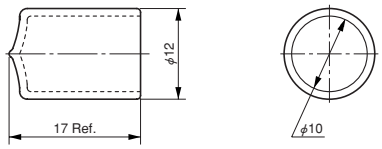

Before placing an order

①The values specified in this catalogue are only for reference. The products and specifications are subject to change without notice. Contact our sales staff for further information before considering or ordering any of our products. For purchase, a product specification must be agreed upon.
②Users are requested to provide protection circuits and redundancy circuits to ensure safety of the equipment, and sufficiently review the suitability of JAE's products to the equipment.
③The products presented in this catalogue are designed for the uses recommended below.
We strongly suggest you contact our sales staff when considering use of any of the products in any other way than the recommended applications or for a specific use that requires an extremely high reliability.

(1)Applications that require consultation:

(i)Please contact us if you are considering use involving a quality assurance program that you specify or that is peculiar to the industry, such as:
Automotive electrical components, train control, telecommunications devices (mainline), traffic light control, electric power, combustion control, fire prevention or security systems, disaster prevention equipment, etc.

(ii)We may separately give you our support with a quality assurance program that you specify, when you think of a use such as:
Aviation or space equipment, submarine repeaters, nuclear power control systems, medical equipment for life support, etc.

(2)Recommended applications include:

Computers, office appliances, telecommunications devices (terminals, mobile units), measuring equipment, audiovisual equipment, home electric appliances, factory automation equipment, etc.

COAXIAL
CONNECTORS

Japan Aviation Electronics Industry, Limited

1-19, Aobadai 3-chome, Meguro-ku, Tokyo 153-8539, Japan
Telephone: (81) 3-3780-2768 Facsimile: (81) 3-3780-2883

http://www.jae.com
http://www.jae-connector.com

JAE Electronics, Inc.
142 Technology Drive, Suite 100 Irvine, California 92618-2430, U.S.A.
Telephone: (1) 949-753-2600 Facsimile: (1) 949-753-2699
(800) JAE-PART (523-7278) Toll free in U.S.A. except in California and Alaska

---

JAE Europe, Ltd.
Coliseum Business Center, Riverside Way, Camberley, Surrey GU15 3YL, U.K.
Telephone: (44) 1276-404000 Facsimile: (44) 1276-404010

JAE Taiwan, Ltd. <Taipei Branch Office>
4F-1, No.88, Sec.2, Chung Hsiao E.Rd., Taipei, Taiwan, R.O.C.
Telephone: (886) 2-2396-7676 Facsimile: (886) 2-2392-5929

JAE Hong Kong, Ltd.
Suites 1407-11,14/F., Tower2, The Gateway, 25 Canton Road,
Tsimshatsui, Kowloon, Hong Kong
Telephone: (852) 2723-7782 Facsimile: (852) 2723-9028

JAE Shanghai Co., Ltd.
RM1407, Shanghai Mart 2299 Yanan Road (West) Shanghai, 200336 P.R.C.
Telephone: (86) 21-6236-0322 Facsimile: (86) 21-6236-1292

JAE Singapore Pte Ltd.
33 Tannery Lane, #02-01 Hoesteel Industrial Building, Singapore 347789
Telephone: (65) 6748-1332 Facsimile: (65) 6748-2920

JAE Korea, Inc.
1602, City Air Tower, 159-9, Samsung-dong, Gangnam-gu, Seoul, 135-973 Korea
Telephone: (82) 2-551-8959 Facsimile: (82) 2-551-8958

No part of this catalogue may be reproduced or distributed in any means, or stored in a data based or retrieval system, without the prior written permission of Japan Aviation Electronics Industry,Ltd.