Product data sheet

Specifications



Modicon X80 RIO Drop E/IP STD

BMXCRA31200

Main

Range of product	Modicon X80
Range compatibility	Modicon M580 Modicon Quantum
Product or component type	I/O expansion module
Device application	X80 Ethernet RIO drop adaptor
Product specific application	For remote I/O modules

Complementary

Bus type	Bus X across the remote backplane
Number of port	2
Integrated connection type	2 port for Ethernet RIO Network (RSTP)
Communication network type	IPv4 (internet protocol)
Communication port protocol	EtherNet/IP
Communication service	Ethernet/IP adapter RSTP (Ring topology support) Ethernet RIO network Quality of Service (QoS) CIP Explicit messaging (server) Modbus TCP server for module diagnostics DHCP client TFTP client FTP client FDR client SNTP client SNMP agent
Cybersecurity	Syslog protocol support
Connector type	2 RJ45
Exchange mode	Half duplex, full duplex, autonegotiation, auto MDIX
Transmission rate	10/100 Mbit/s
Port Ethernet	10/100BASE-TX
Function available	CCOTF (configuration change on the fly) Input data is collected and published to the remote I/O head adaptor Output modules are updated with the data received from remote I/O head adaptor Diagnostics for remote I/O devices (Device DDT) I/O extension rack
Data recording	10 ms time stamps
Topology	Ring
Local signalling	1 LED (green) for module active (RUN) 1 LED (red) for module error (ERR)

Disclaimer: This documentation is not intended as a substitute for and is not to be used for determining suitability or reliability of these products for specific user applications

	1 LED (green/red) for module status (Mod Status) 1 LED (green/red) for network communication status (Net Status) 1 LED (green) for Ethernet link diagnostics (STS)
Current consumption	1200 mA
Input voltage	3.3 V DC
Product compatibility	0…128 discrete channel 0…16 analog channel
Module format	Standard
Net weight	0.225 kg
Maximum altitude transport	3000 m
Relative humidity	95 % without condensation
Fixing mode	By screws
Mounting mode	Rack-mounted
Width	32 mm
Height	100 mm
Depth	87.5 mm

Environment

Directives	2014/35/EU - low voltage directive 2014/30/EU - electromagnetic compatibility
Product certifications	CE UL CSA RCM EAC Merchant Navy
Standards	EN/IEC 61131-2 EN/IEC 61010-2-201 UL 61010-2-201 CSA C22.2 No 61010-2-201 IACS E10 EN/IEC 61000-6-5, interface type 1 and type 2 EN/IEC 61850-3, location G
Environmental characteristic	Standard environment
IP degree of protection	IP20
Ambient air temperature for operation	0…60 °C
Ambient air temperature for storage	-40…85 °C
Operating altitude	<= 2000 m

Packing Units

Unit Type of Package 1	PCE
Number of Units in Package 1	1
Package 1 Weight	232.0 g
Package 1 Height	5.4 cm
Package 1 width	10.9 cm
Package 1 Length	11.5 cm
Unit Type of Package 2	S02
Number of Units in Package 2	15
Package 2 Weight	3.7 kg
Package 2 Height	15 cm
Package 2 width	30 cm

Package 2 Length	40 cm

Offer Sustainability

Sustainable offer status	Green Premium product
REACh Regulation	REACh Declaration
REACh free of SVHC	Yes
EU RoHS Directive	Pro-active compliance (Product out of EU RoHS legal scope) EU RoHS Declaration
Mercury free	Yes
RoHS exemption information	Yes
China RoHS Regulation	China RoHS declaration
Environmental Disclosure	Product Environmental Profile
Circularity Profile	End of Life Information
WEEE	The product must be disposed on European Union markets following specific waste collection and never end up in rubbish bins
California proposition 65	WARNING: This product can expose you to chemicals including: Lead and lead compounds, which is known to the State of California to cause cancer and birth defects or other reproductive harm. For more information go to www.P65Warnings.ca.gov

Contractual warranty

Warranty	18 months

Product data sheet
Presentation

BMXCRA31200

Presentation

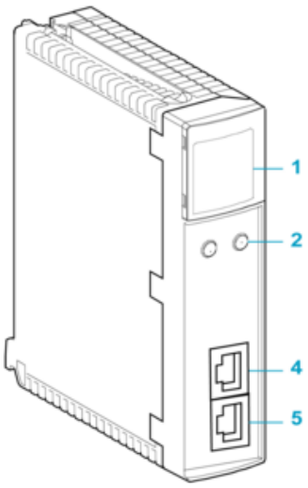

1 : LED display

2 : rotary switches

4 : DEVICE NETWORK port (ETH 2)

5 : DEVICE NETWORK port (ETH 3)

Modules Mounted on Racks

Dimensions

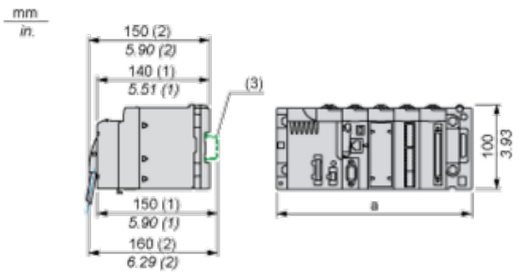

(1) With removable terminal block (cage, screw or spring).

(2) With FCN connector.

(3) On AM1 ED rail: 35 mm wide, 15 mm deep. Only possible with BMXXBP0400/0400H/0600/0600H/0800/0800H rack.

Rack references	a in mm	a in in.
BMXXBP0400 and BMXXBP0400H	242.4	09.54
BMXXBP0600 and BMXXBP0600H	307.6	12.11
BMXXBP0800 and BMXXBP0800H	372.8	14.68
BMXXBP1200 and BMXXBP1200H	503.2	19.81